APPROVED: Ivan Hackworth
DIRECTOR OF PUBLIC WORKS

COUNTY OF PLACER
DEPARTMENT OF PUBLIC WORKS

CONSTRUCTION STAKING

DATE: JULY, 2005 | NTS | PLATE **C-1** (61)

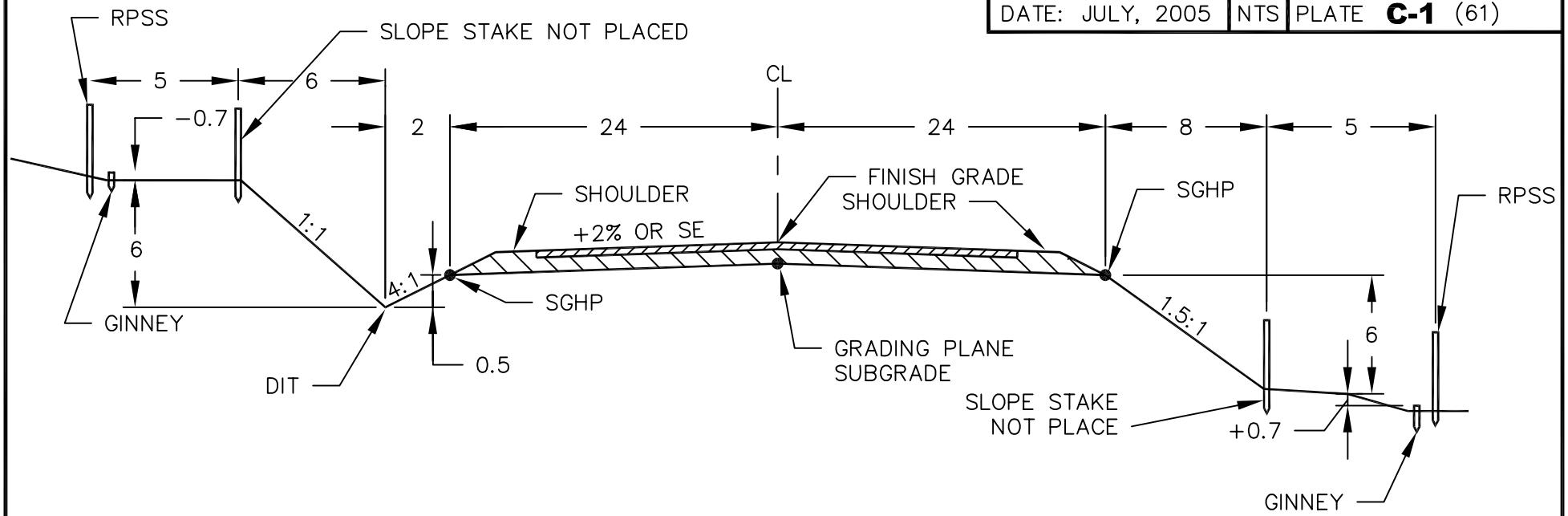

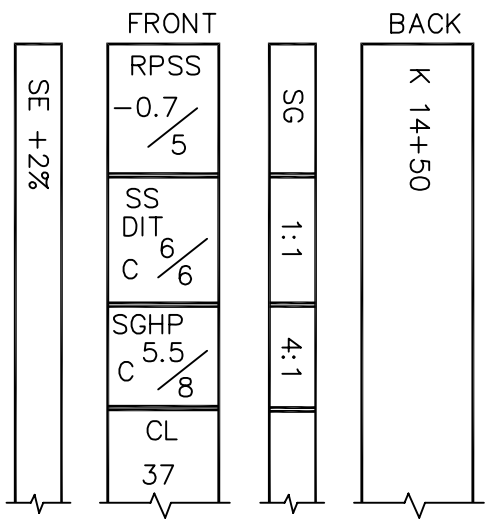

CUT

LEGEND:

RPSS	REFERENCE POINT SLOPE STAKE
SS	SLOPE STAKE
SGHP	SUBGRADE HINGE POINT
DIT	DITCH
SE	SUPERELEVATION–CROWN SLOPE
SG	SUBGRADE

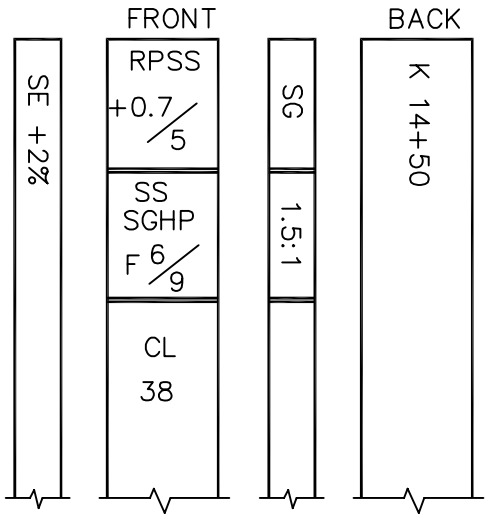

FILL