COUNTY OF PLACER
DEPARTMENT OF PUBLIC WORKS

CONCRETE CURBS & GUTTERS

DATE: JULY, 2005	NTS	PLATE **R-21** (30–1)

APPROVED: Jim Hackworth
DIRECTOR OF PUBLIC WORKS

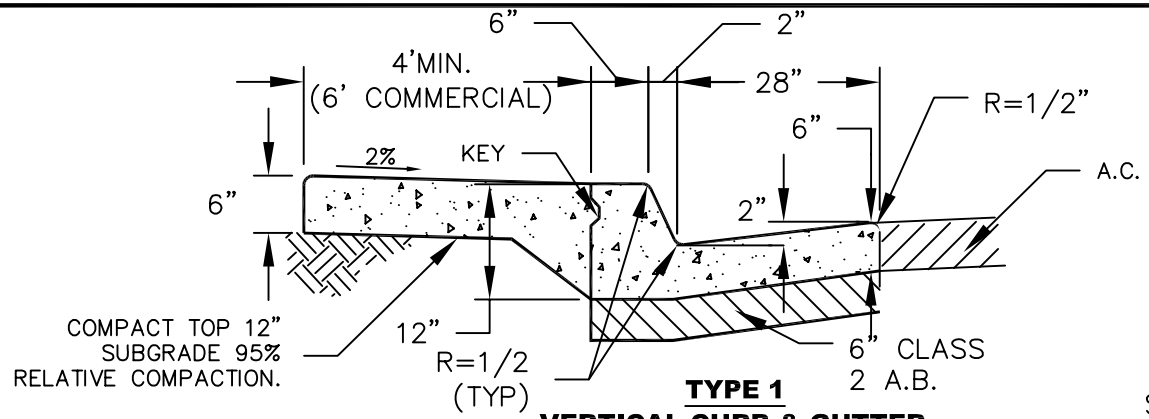

TYPE 1
VERTICAL CURB & GUTTER

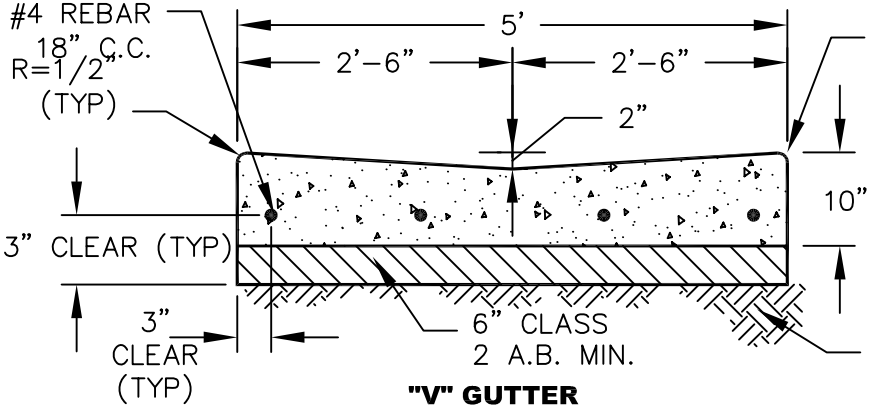

"V" GUTTER

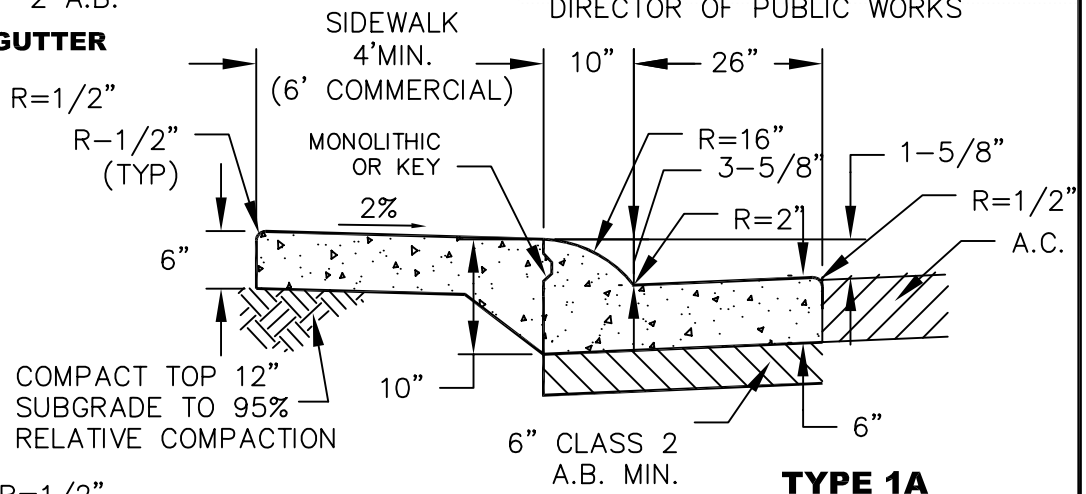

TYPE 1A
ROLLED CURB & GUTTER

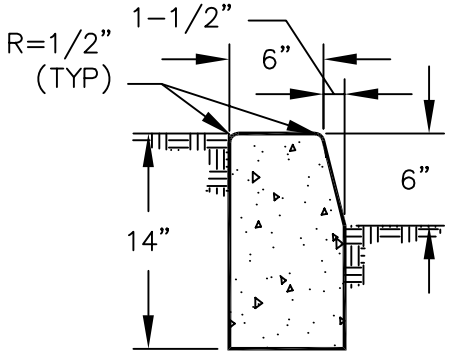

TYPE A1-6
BARRIER CURB FOR COMM. FRONTAGE

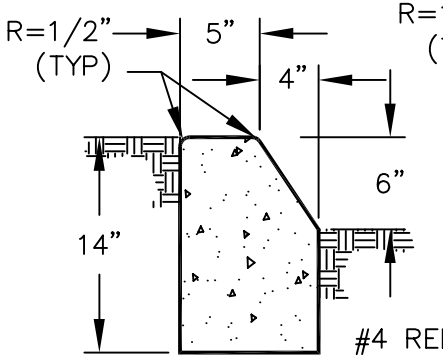

TYPE B1
BARRIER CURB

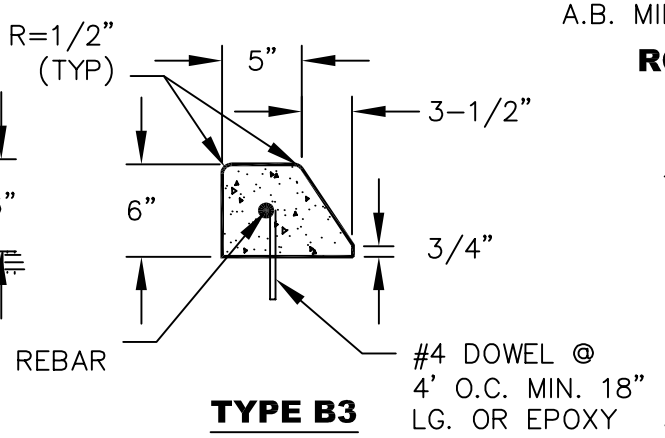

TYPE B3
BARRIER CURB

NOTES:

1. STRUCTURAL THICKNESSES ARE MINIMUM. INCREASED SECTIONS MAY BE REQUIRED BASED ON ACTUAL SOIL CONDITIONS, OR PROJECT APPROVALS.
2. UNSUITABLE MATERIALS TO BE REMOVED & REPLACED W/SUITABLE MATERIAL.

NOTES:

1. ALL CONCRETE TO BE SIX SACK MIX.
2. EXPANSION AND WEAKENED PLANE JOINTS PER SECTION 73–1.05 OF THE PLACER GENERAL SPECIFICATIONS.
3. SUBDRAINS BEHIND SIDEWALK MAY BE REQUIRED AT THE DISCRETION OF THE ENGINEER.