APPROVED: Jim Hackworth
DIRECTOR OF PUBLIC WORKS

COUNTY OF PLACER
DEPARTMENT OF PUBLIC WORKS

STANDARD 36" SANITARY SEWER OR STORM DRAIN MANHOLE FRAME AND COVER

DATE: JULY, 2005 | NTS | PLATE **U-14** (90)

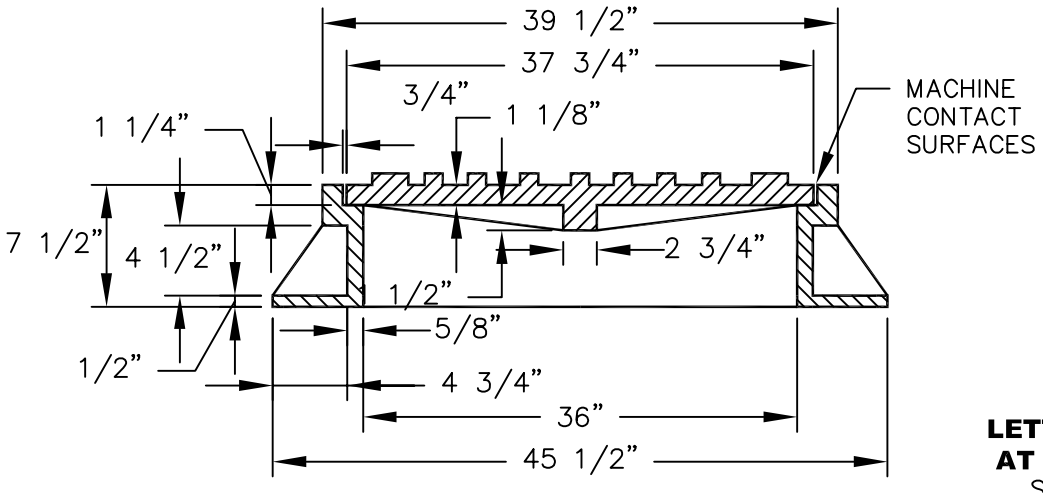

SECTION A-A

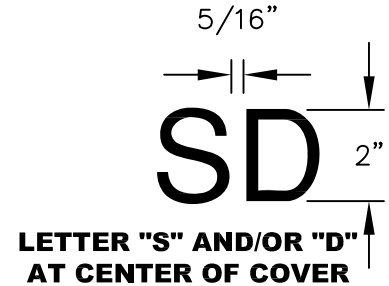

LETTER "S" AND/OR "D" AT CENTER OF COVER
S = SANITARY SEWER
SD, D = STORM DRAIN

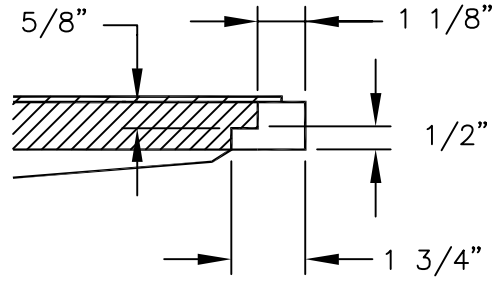

PICK HOLE DETAIL

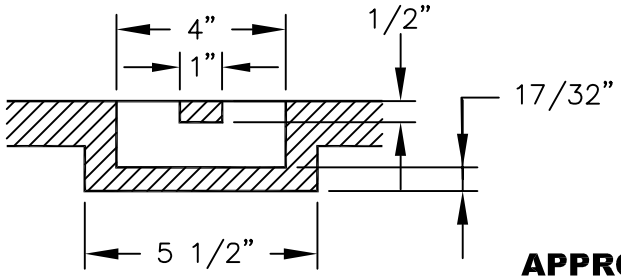

APPROX. WEIGHTS:
FRAME – 300 LBS.
COVER – 375 LBS.

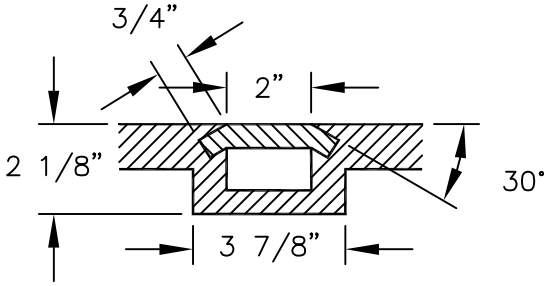

LIFT SOCKET DETAIL

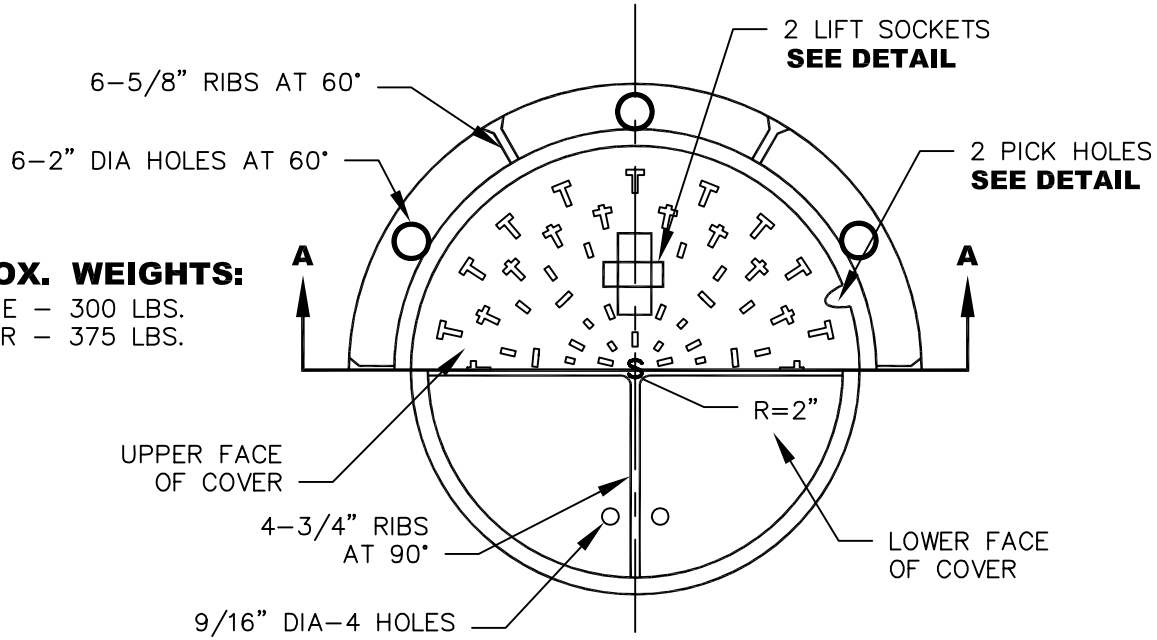

HALF PLAN OF MANHOLE FRAME & COVER