APPROVED: Jim Hackworth
DIRECTOR OF PUBLIC WORKS

COUNTY OF PLACER
DEPARTMENT OF PUBLIC WORKS

BOLLARD DETAILS

DATE: JULY, 2005 | NTS | PLATE **U-23**

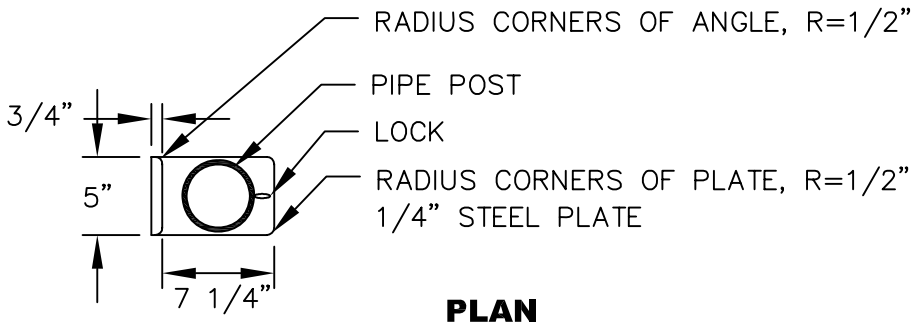

PLAN

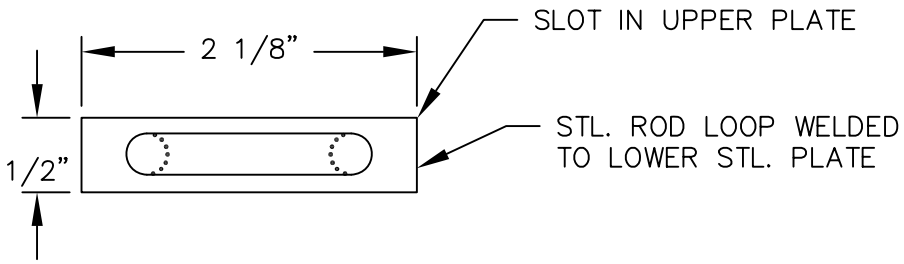

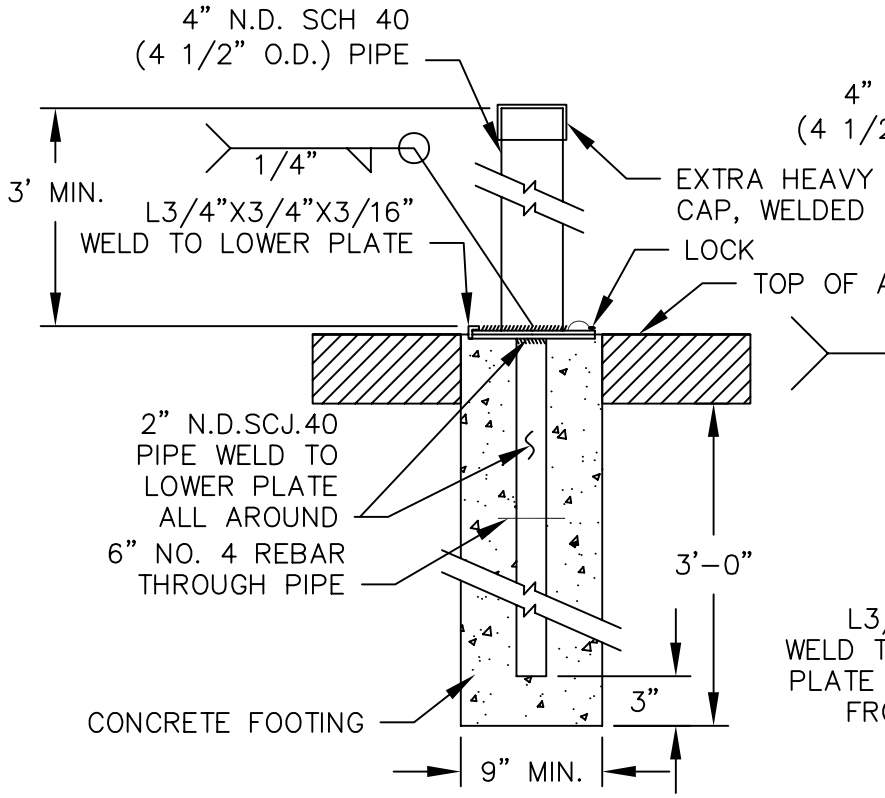

SECTION

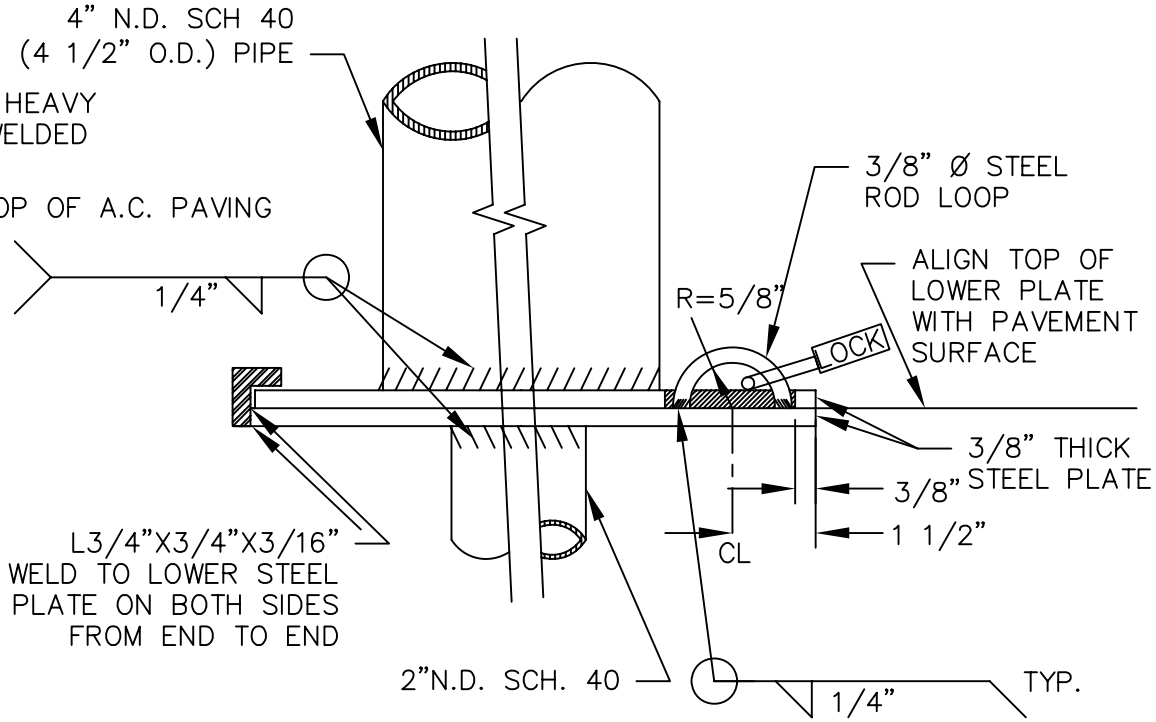

PLATE AND LOCK DETAIL