APPROVED: Jim Hackworth
DIRECTOR OF PUBLIC WORKS

COUNTY OF PLACER
DEPARTMENT OF PUBLIC WORKS

TRASH RACK

DATE: JULY, 2005 | NTS | PLATE **U-33**

NOTES:

1. ENTIRE RACK TO BE WELDED REINFORCING STEEL OR ROUND BARS OF EQUAL DIAMETER WITH HORIZONTAL BARS BEING 8" CENTER TO CENTER.
2. USE 5 SACK MIX CONCRETE.
3. ROOM SHALL BE PROVIDED DOWNSTREAM TO LAY RACK FLAT.
4. REFER TO SECTION 5.09(1)(g) IN THE LAND DEVELOPMENT MANUAL.

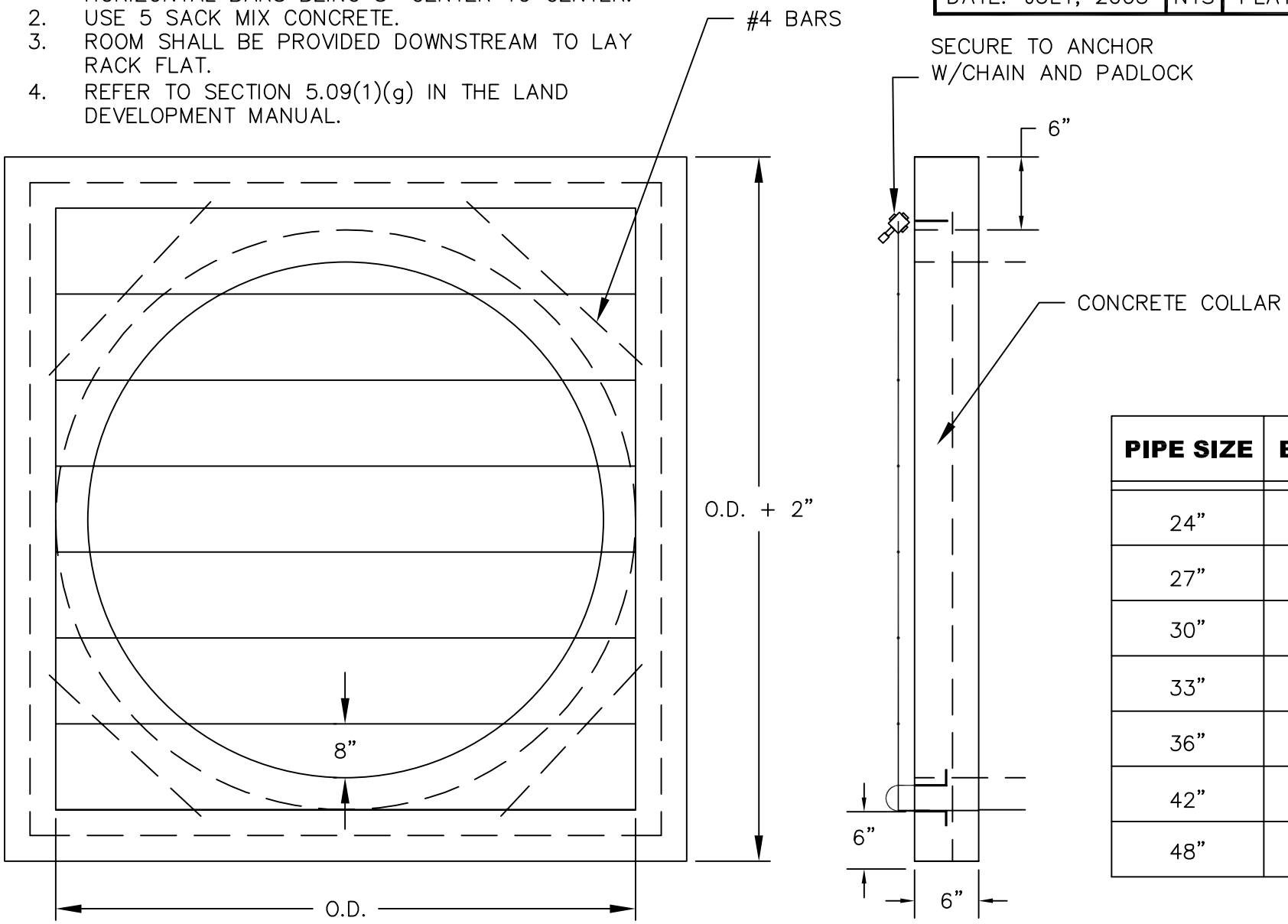

PIPE SIZE	BAR SIZE
24"	#4
27"	#5
30"	#5
33"	#6
36"	#6
42"	#7
48"	#7