COUNTY OF PLACER
DEPARTMENT OF PUBLIC WORKS

FIRE SUPPLY
STORAGE TANK PLACEMENT

DATE: JULY, 2005	NTS	PLATE **U-5.1**

APPROVED: Jim Hackworth
DIRECTOR OF PUBLIC WORKS

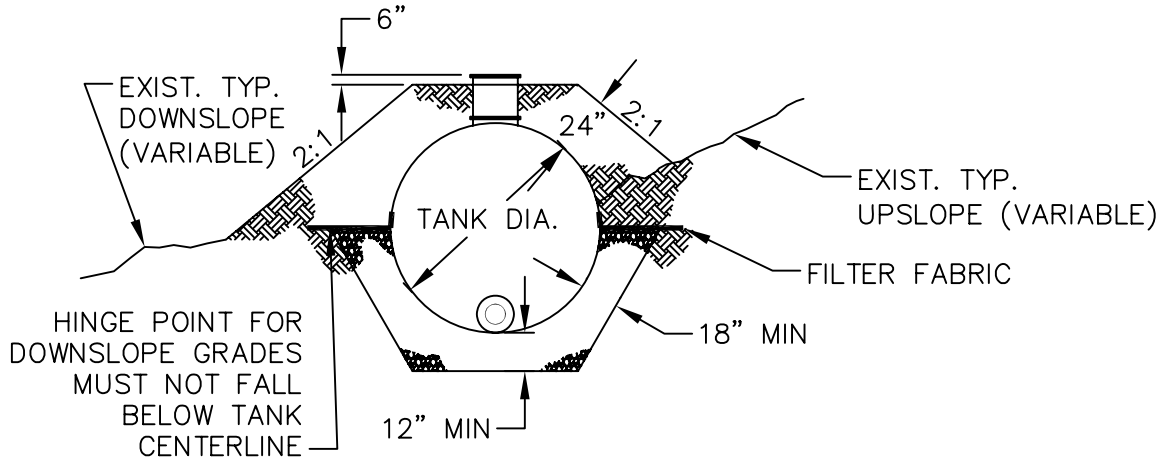
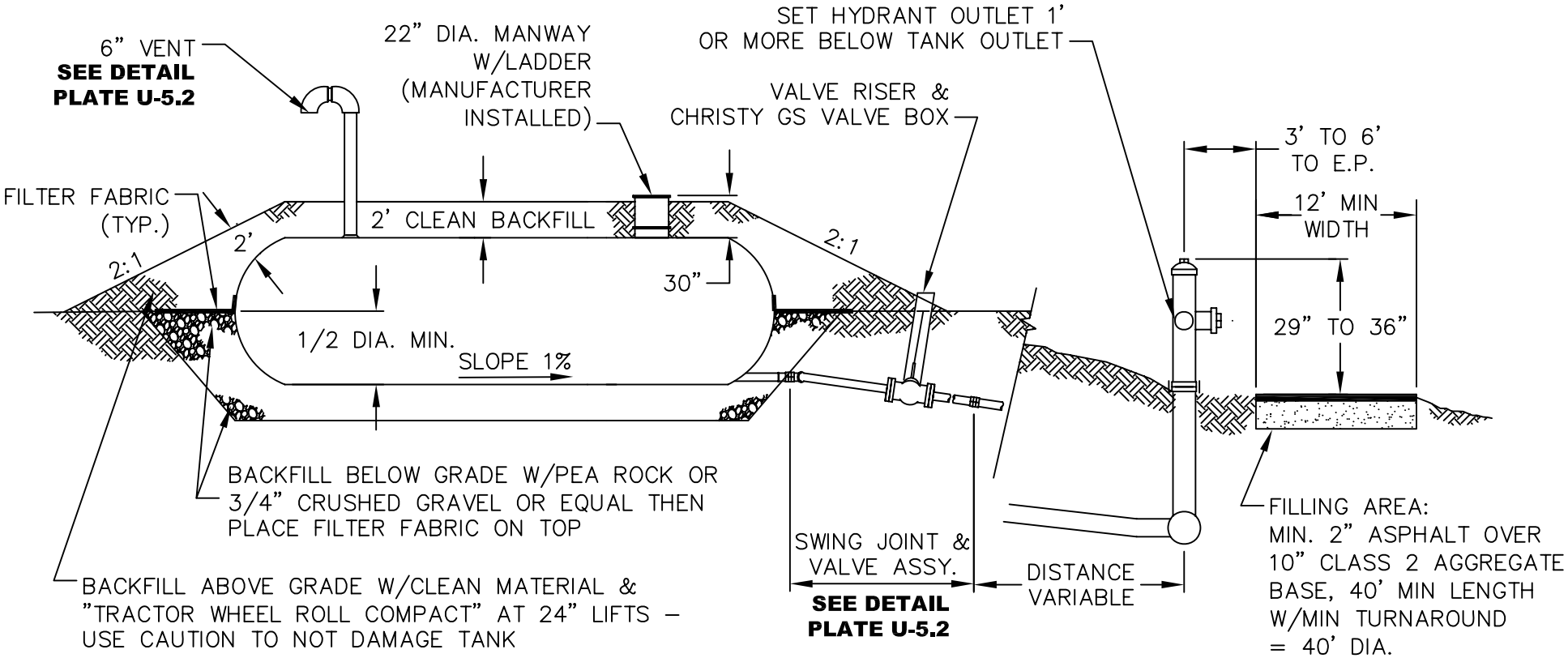
TANK AND HYDRANT PLACEMENT DETAILS