APPROX. WEIGHTS:
FRAME – 211 LBS.
COVER – 174 LBS.

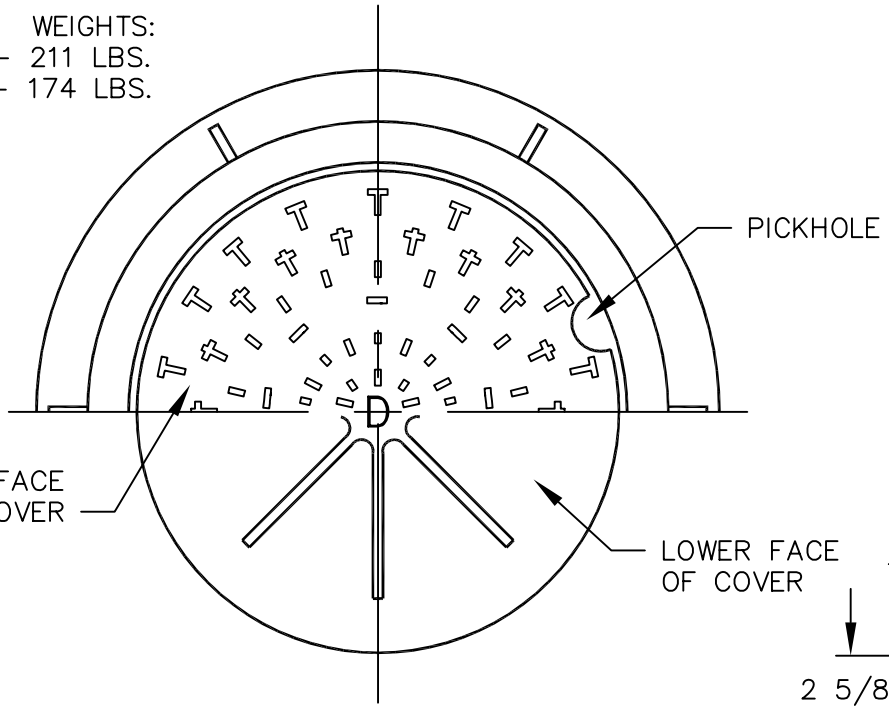

HALF PLAN OF MANHOLE FRAME & COVER

SD or D = STORM DRAIN

COUNTY OF PLACER
DEPARTMENT OF PUBLIC WORKS

STANDARD 24" STORM DRAIN MANHOLE FRAME AND COVER

DATE: JULY, 2005	NTS	PLATE **U-6** (81)

APPROVED: Jim Hackworth
DIRECTOR OF PUBLIC WORKS

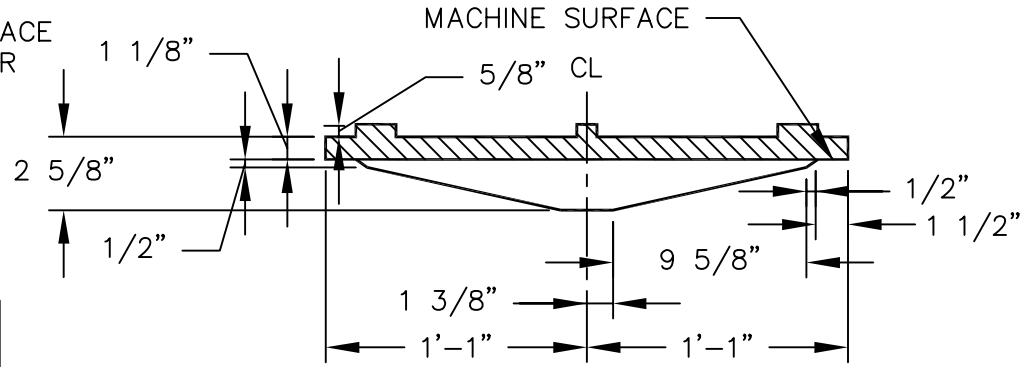

SECTION ON CL THROUGH COVER

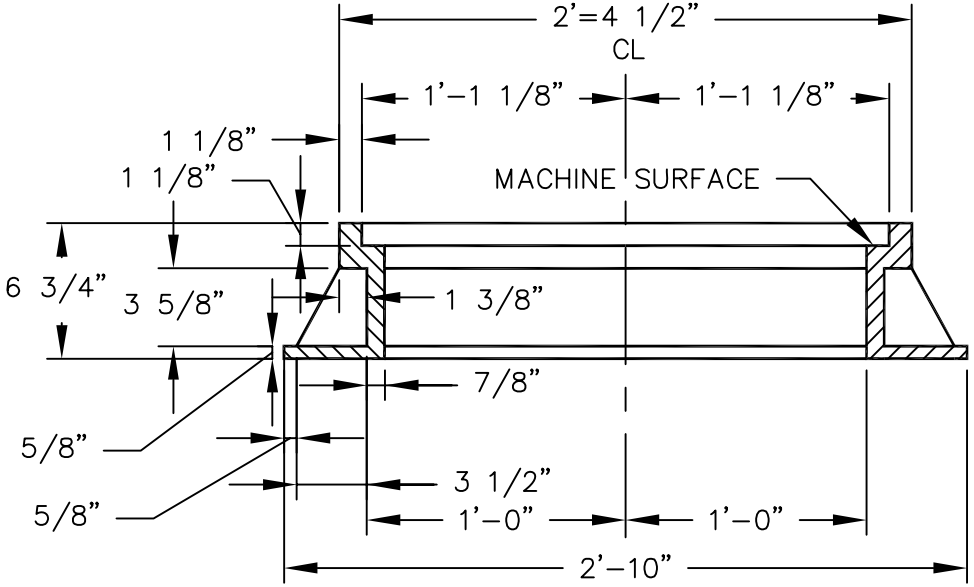

SECTION ON CL THROUGH FRAME

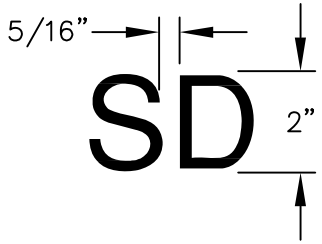

LETTER "S" AND/OR "D" AT CENTER OF COVER