APPROVED: Jim Hackworth
DIRECTOR OF PUBLIC WORKS

COUNTY OF PLACER
DEPARTMENT OF PUBLIC WORKS

STANDARD SANITARY
SEWER MANHOLE

DATE: JULY, 2005 | NTS | PLATE **U-10.1** (86)

(SEE PLATE U-10.2 FOR NOTES)

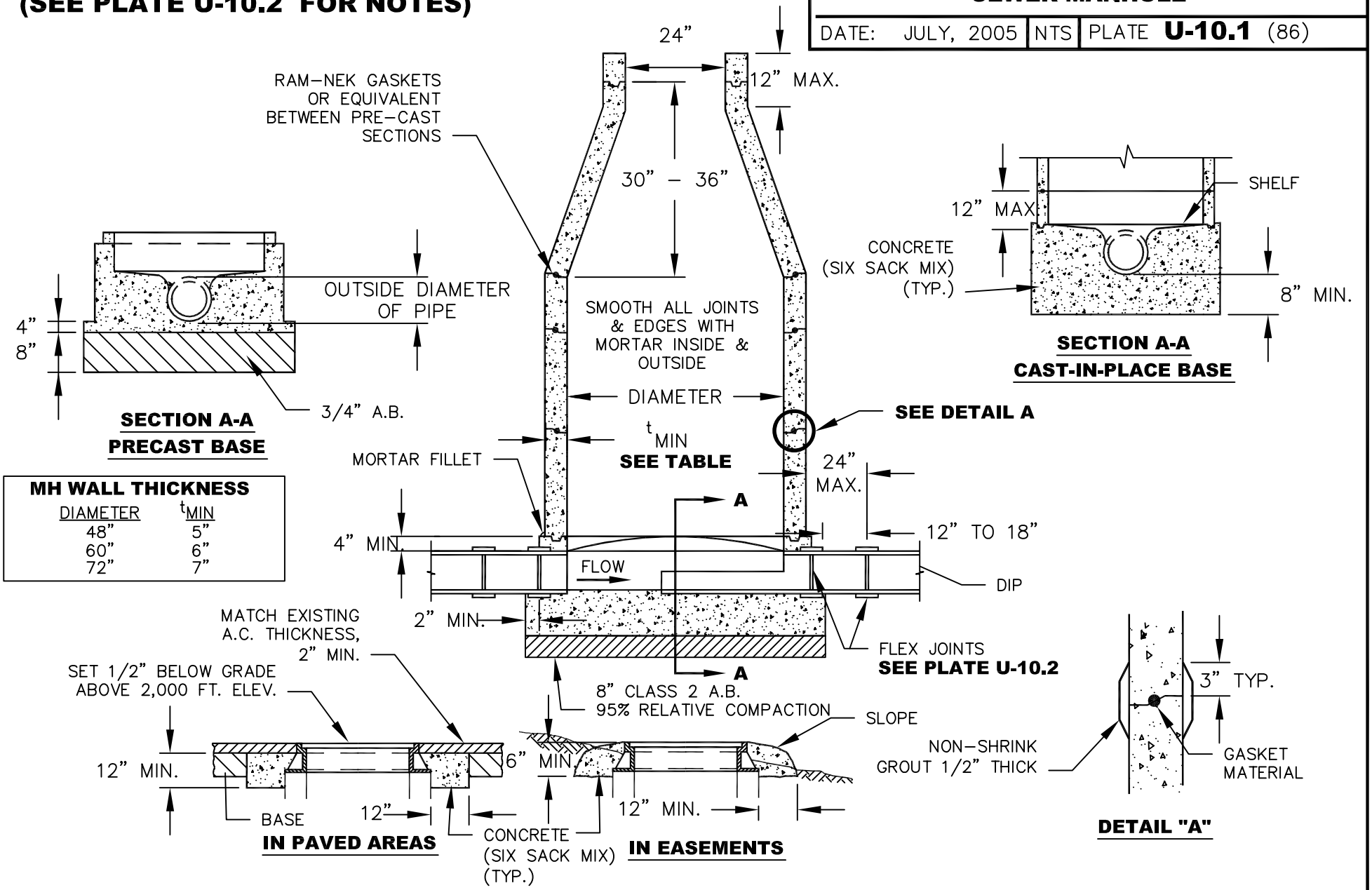

MH WALL THICKNESS

DIAMETER	t_{MIN}
48"	5"
60"	6"
72"	7"