Appendix F

Nalgene Storm Water Sampler and Mounting Kit Installation Guide

NALGENE® Storm Water Sampler and Mounting Kit

Cat. Nos. 1100-1000, 1120-1000 and 1160-1000

Storm Water Sampler
NALGENE Cat. Nos. 1100-1000 and 1120-1000
(Single Use Disposable)

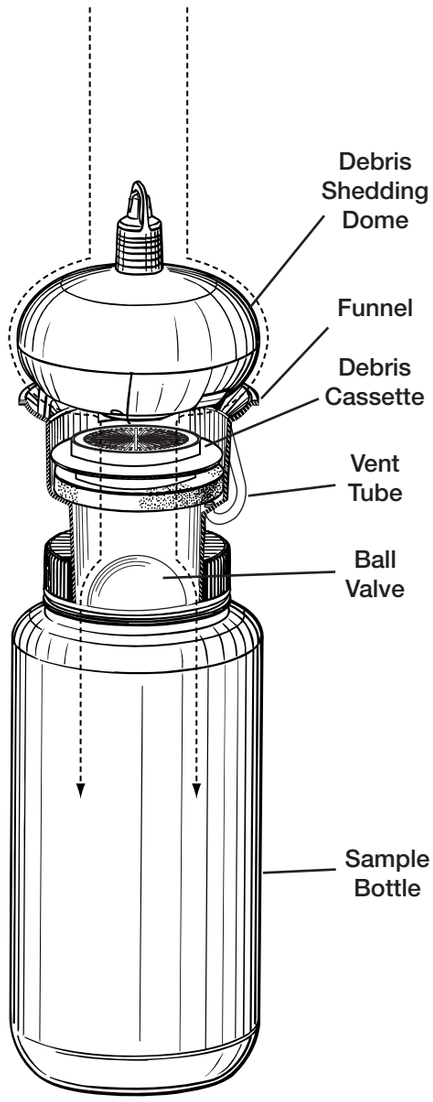

Fig. 1

Storm Water Mounting Kit
NALGENE Cat. No. 1160-1000
(Reusable)

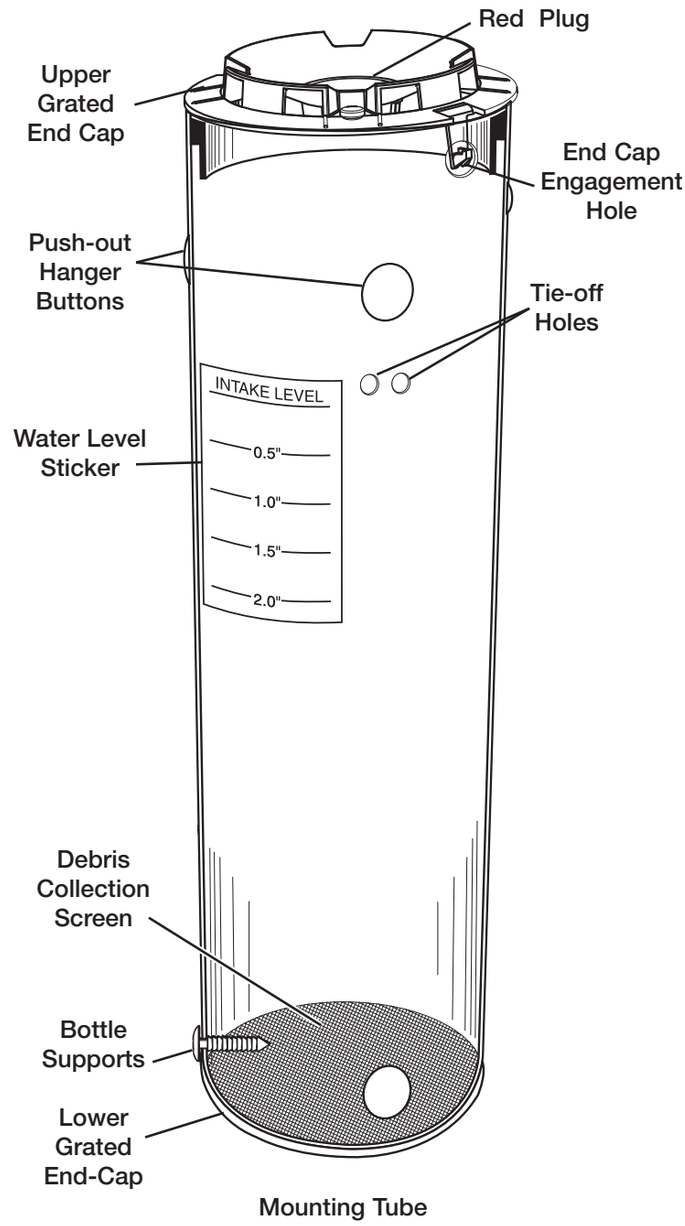

Important Note: NALGENE Storm Water Samplers (Cat. Nos. 1100-1000 and 1120-1000) are intended for one-time use. Performance not guaranteed for re-use. Unit as provided will fill in approximately 90 seconds; for faster fill and larger debris collection, the Debris Cassette may be removed.

NOTE: **Mounting kit is reusable,** is required for ditch and stream applications, and is recommended for storm grate mounting unless drain chamber space precludes use. Mounting kit benefits include:

- Protecting sampler from large debris that may damage the unit during outfall flow
- Collecting selected suspended solids for visual notation
- Protecting sampler from environmental exposure prior to a rain event
- Protecting the sample bottle from breakage (1120-1000)

Tools/additional materials required:

- Slotted-head screwdriver
- Colored Tape or Ribbon
- Shovel (for ditch mounting)
- Rope (for stream mounting)
- T-Post (for stream mounting)

Caution! When collecting samples for oil and grease analysis, handle the sampler only while wearing clean gloves to prevent sample contamination.

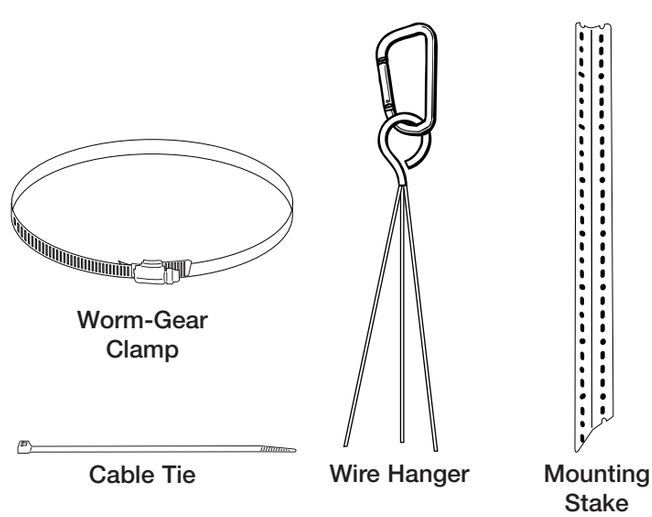

Fig. 2

Directions for Use:

Mounting Tube Loading:

a. Open the Mounting Tube by removing the upper grated end cap (End cap removes easily by inserting a pen or other object into one of the end cap engagement holes).
b. Position the Storm Water Sampler at the bottom of the Mounting Tube.
c. Replace the Upper Grated End Cap, making sure to snap the end cap into the engagement holes.

1. Position the loaded Mounting Tube in the outfall as diagrammed in Figures 3-5.

a. **Grate Mounting** (Figure 3.)
   i. Sampler may be suspended from a storm water grate without the Mounting Tube if the tube is too tall to fit in the space below the grate; however larger suspended solids will not be collected. If Mounting Tube is not used, suspend sampler on a wire or string threaded through the handle eye at the top of the dome.
   ii. To suspend Mounting Tube, push out the three Hanger Buttons on the tube and attach the Wire Hanger. Secure to grate with clip. It may be necessary to attach a wire or chain to the grate to which you can clip the Mounting Tube.

   *NOTE: Position sampler **near the edge** of the storm drain chamber (not in the middle) where it will intercept flow from the surface.*
   iii. Remove the red plug in the upper grated end cap to allow water to flow in from above.

b. **Ditch Mounting** (Figure 4.)
   i. Dig a hole deep enough to lower the sampler/Mounting Tube to the desired height above the bottom of the ditch.

   NOTE: Proper height must be determined by the anticipated flow elevation of a qualifying storm event.
   ii. Drive Mounting Stake into the downstream side of the hole with the open side of the "V" facing upstream.
   iii. Using a screwdriver, secure Mounting Tube to the open "V" side of the stake at the desired elevation by tightening the Metal Worm Clamp.
   iv. Backfill the hole around the Mounting Tube and flag the location with bright colored ribbon, tape or by other means to assist in locating the sampler for retrieval.
   v. Make sure the red plug is inserted in the upper grated end cap to prevent falling rain from being collected directly.

c. **Stream Mounting** (Figure 5.)
   i. Stream mounting generally requires the purchase of a taller post (T-posts are recommended and commercially available from most hardware stores). Drive the post securely into the stream bottom at the desired location.
   ii. Using a screwdriver, tighten the Metal Worm Clamp to secure the Mounting Tube to the downstream side of the post. Position the water "intake level" line at the desired height above water level.

   NOTE: Proper height must be determined by the anticipated flow elevation of a qualifying storm event.

   Important: do not submerge the sampler vent tube during set up, or it may airlock and prevent proper sample collection.

   iii. It is recommended that the mounting tube be secured to the stream bank by tying a rope through the two holes on the Mounting Tube, and tying it off to a secure location on bank (tree, mounting stake, etc.) The Cable Tie can be threaded through the two holes to create a larger loop to more easily tie off the Mounting Tube.
   iv. Make sure the red plug is inserted in the upper grated end cap to prevent falling rain from being collected directly.

2. Leave the sampler in position until a qualifying rain event occurs.

a. Storm Water Sampler will collect sample until the bottle is full, then the floating ball valve will close the bottle chamber to prevent sample dilution.

3. Retrieve the sampler from the mounting tube after a rain event that results in outfall flow.

a. Remove the grated end cap from the mounting tube and pull the sampler out.
b. Remove the disposable sampling device from the bottle, and cap the bottle with the closure provided.
   i. Collect and record visual sample data, as required.
   ii. If chemical analysis is required, follow laboratory directions for chemical sample preservation, and transport the sample to the lab on ice.
c. Suspended solids small enough to pass through the grated end-cap will be collected by the screen at the bottom of the mounting tube. Make visual notations as required, then remove the screen, clean it, and replace it in the bottom of the reusable mounting tube prior to next use.

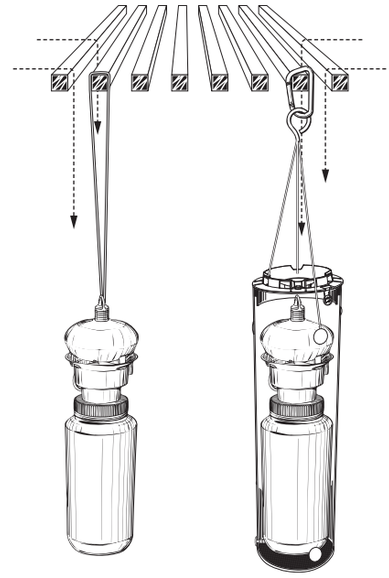

Fig. 3
Grate Mount

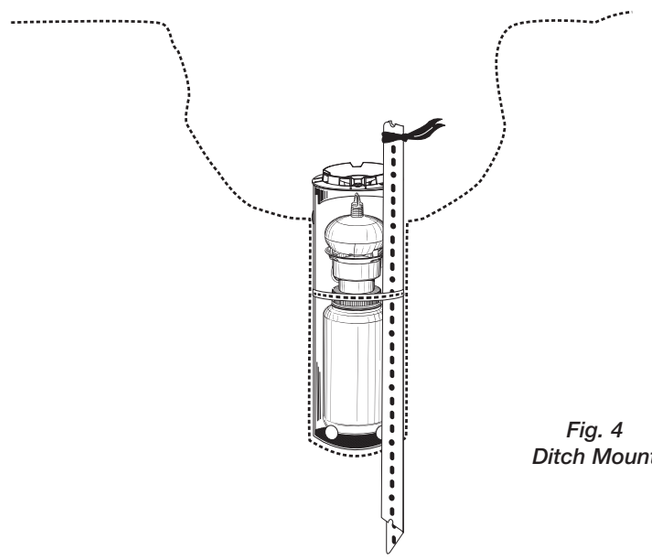

Fig. 4
Ditch Mount

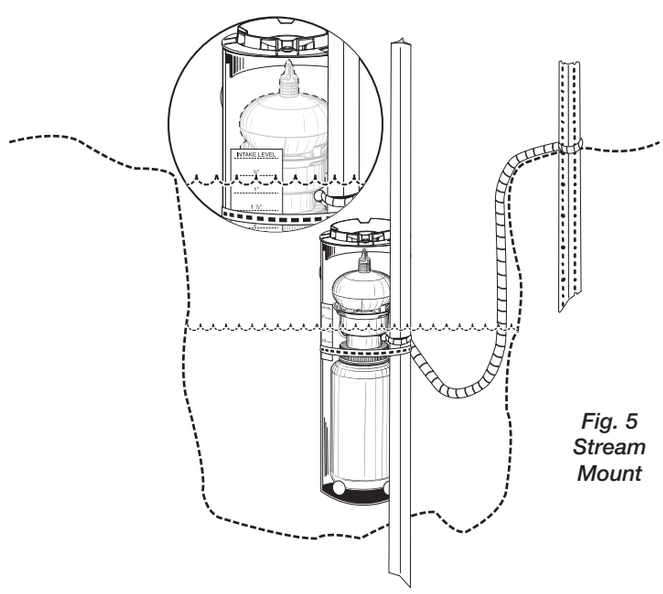

Fig. 5
Stream
Mount

ISO 13485
Certified

NALGENE®

75 Panorama Creek Drive
Rochester, NY 14625-2385 U.S.A.
Visit us on the internet at:
www.stormwatersampler.com

U.S.A and Canada
Tel: 1-800-625-4327
1-585-586-8800
Fax: 1-800-625-4363
e-mail: Technical.nalgene@thermofisher.com

Europe (U.K.):
Tel: +44 (0) 1432 263933
Fax: +44 (0) 1432 376567
email: sales@nalgene.co.uk

Japan:
Tel: +81 3 3816 3355
Fax: +81 3 3816 6799
email: info@nalgenunc.co.jp

Other Countries
(U.S.A., International Dept.)
Tel: +1 585 899 7198
Fax: +1 585 899 7195
email: Technical.nalgene@thermofisher.com

8-0400-16 1206 N20146
© 2006
Printed in U.S.A.