COUNTY OF PLACER
DEPARTMENT OF PUBLIC WORKS

SPECIAL PROVISIONS

FOR

AUBURN FOLSOM ROAD WIDENING, SOUTH PHASE

CONTRACT NO. 1001

BID OPENING - _____, 2007 AT _____ P.M.

FOR USE IN CONNECTION WITH STANDARD SPECIFICATIONS DATED MAY 2006, STANDARD PLANS DATED MAY 2006, AND LABOR SURCHARGE AND EQUIPMENT RATES OF THE CALIFORNIA DEPARTMENT OF TRANSPORTATION AND THE PLACER COUNTY GENERAL SPECIFICATIONS DATED OCTOBER 1996 INSOFAR AS THE SAME MAY APPLY AND IN ACCORDANCE WITH THE SPECIAL PROVISIONS.

CONTRACT No. 1001

THE SPECIAL PROVISIONS CONTAINED HEREIN HAVE BEEN PREPARED BY OR UNDER THE DIRECTION OF THE FOLLOWING REGISTERED ENGINEER.

1008

Brian Stephenson, P.E. Date
Dokken Engineering

AUBURN FOLSOM ROAD WIDENING, SOUTH PHASE

Contract No. 1001

TABLE OF CONTENTS

COPY OF ENGINEER'S ESTIMATE
SECTION 1. SPECIFICATIONS AND PLANS.....1
1-1.01 GENERAL 1
1-1.02 DEFINITIONS AND TERMS: 1
SECTION 2. PROPOSAL REQUIREMENTS AND CONDITIONS.....2
2-1.01 GENERAL 2
2-1.02 REQUIRED LISTING OF PROPOSED PRODUCTS "OR EQUALS" WITH BID PROPOSAL: 4
2-1.03 DBE GOAL FOR THIS PROJECT 4
2-1.04 REQUIRED LISTING OF PROPOSED SUBCONTRACTORS 5
2-1.05 PROPOSAL GUARANTY 5
2-1.06 NON-COLLUSION AFFIDAVIT 5
SECTION 3. SUBMISSION OF DBE INFORMATION, AWARD, AND EXECUTION OF CONTRACT 5
3-1.01 GENERAL 5
3-1.02 AWARD OF CONTRACT 6
3-1.03 CONTRACT BONDS 6
SECTION 4. BEGINNING OF WORK, TIME OF COMPLETION AND LIQUIDATED DAMAGES.....7
4-1.01 GENERAL 7
4-1.02 PRE-CONSTRUCTION CONFERENCE 7
SECTION 5. GENERAL 8
SECTION 5.1 MISCELLANEOUS: 8
5-1.01 LABOR NONDISCRIMINATION 8
5-1.02 LABOR CODE REQUIREMENTS 8
5-1.03 CONTRACTOR'S LICENSING LAWS 9
5-1.04 ARBITRATION 9
5-1.05 NOTICE OF POTENTIAL CLAIM: 11
5-1.06 FINAL PAYMENT AND CLAIMS 11
5-1.07 EXCLUSION OF RETENTION 12
5-1.08 UNSATISFACTORY PROGRESS 13
5-1.09 INTEREST ON PAYMENTS 13
5-1.10 PUBLIC SAFETY 14
5-1.11 DIFFERING SITE CONDITIONS 15
5-1.12 SURFACE MINING AND RECLAMATION ACT 16
5-1.13 EXCAVATION SAFETY PLAN 16
5-1.14 REMOVAL OF ASBESTOS AND HAZARDOUS SUBSTANCES: 18
5-1.15 SUBCONTRACTORS AND DBE RECORDS 18
5-1.16 PERFORMANCE OF DBE SUBCONTRACTORS AND SUPPLIERS 19
5-1.17 BUY AMERICA REQUIREMENTS: 19
5-1.18 DBE CERTIFICATION STATUS 20
5-1.19 YEAR 2000 COMPLIANCE 20
5-1.20 SOUND CONTROL REQUIREMENTS 21
5-1.21 SUBCONTRACTING 21

5-1.22 PROMPT PROGRESS PAYMENT TO SUBCONTRACTORS 22
5-1.23 RESPONSIBILITY TO OTHER ENTITIES 22
5-1.24 RECORDS 23
5-1.25 AREAS FOR CONTRACTOR'S USE 23
5-1.26 PAYMENTS 24
5-1.27 WARRANTY 25
5-1.28 AIR POLLUTION CONTROL 25
5-1.29 PROJECT APPEARANCE 25
5-1.30 ALTERNATIVE WATER SUPPLY 26
5-1.31 INSURANCE 26
5-1.32 COST REDUCTION INCENTIVE 30
5-1.33 PERMITS 30
5-1.34 RELATIONS WITH CALIFORNIA DEPARTMENT OF FISH AND GAME 31
5-1.35 RELATIONS WITH CALIFORNIA REGIONAL WATER QUALITY CONTROL BOARD 32
5-1.36 RELATIONS WITH ARMY CORPS OF ENGINEERS 33
5-1.37 TESTING 34
5-1.38 ENVIRONMENTALLY SENSITIVE AREA 34
5-1.39 DISCOVERY OF CULTURAL RESOURCES 35
5-1.40 PREVAILING WAGE 35
5-1.41 PLANS AND WORKING DRAWINGS 35
5-1.42 RELIEF FROM MAINTENANCE AND RESPONSIBILITY 35
5-1.43 PERMITS 35
SECTION 6. (BLANK) 36
SECTION 7. (BLANK) 36
SECTION 8. MATERIALS 36
SECTION 8-1. MISCELLANEOUS 36
8-1.02 PREQUALIFIED AND TESTED SIGNING AND DELINEATION MATERIALS 36
SECTION 8-2. CONCRETE 43
8-2.__ PORTLAND CEMENT CONCRETE 44
SECTION 8-3. WELDING 45
8-3.01 WELDING 45
WELDING QUALITY CONTROL 49
WELDING FOR OVERHEAD SIGN AND POLE STRUCTURES 52
PAYMENT 53
SECTION 9. (BLANK) 53
SECTION 10. CONSTRUCTION DETAILS 53
SECTION 10-1. GENERAL 53
10-1.01 ORDER OF WORK 54
10-1.02 WATER POLLUTION CONTROL 56
IMPLEMENTATION REQUIREMENTS 59
INSPECTION AND MAINTENANCE 60
REPORTING REQUIREMENTS 60
PAYMENT 61
10-1.03 CONSTRUCTION SITE MANAGEMENT 61
SPILL PREVENTION AND CONTROL 62
MATERIAL MANAGEMENT 63
WASTE MANAGEMENT 65
NON-STORM WATER MANAGEMENT 69
PAYMENT 72
10-1.04 TEMPORARY FENCE (TYPE ESA) 73
10-1.05 COOPERATION 74
10-1.06 PROGRESS SCHEDULE (CRITICAL PATH METHOD) 75
10-1.07 OBSTRUCTIONS 78
10-1.08 DUST CONTROL 80

10-1.09 MOBILIZATION 80
10-1.10 CONSTRUCTION AREA TRAFFIC CONTROL DEVICES 80
10-1.11 CONSTRUCTION AREA SIGNS 82
10-1.12 MAINTAINING TRAFFIC 83
10-1.13 CLOSURE REQUIREMENTS AND CONDITIONS 84
10-1.14 TRAFFIC CONTROL SYSTEM FOR LANE CLOSURE 86
STATIONARY LANE CLOSURE 86
MOVING LANE CLOSURE 86
PAYMENT 87
10-1.15 TEMPORARY PAVEMENT DELINEATION 88
10-1.16 BARRICADE 90
10-1.17 PORTABLE CHANGEABLE MESSAGE SIGN 91
10-1.19 TEMPORARY RAILING 91
10-1.20 CHANNELIZER 91
10-1.21 TEMPORARY CRASH CUSHION MODULE 91
10-1.22 EXISTING HIGHWAY FACILITIES 93
REMOVE PAVEMENT MARKER 94
REMOVE TRAFFIC STRIPE AND PAVEMENT MARKING 94
REMOVE DRAINAGE FACILITY 94
REMOVE FENCE 94
SALVAGE FENCE 94
REMOVE CONCRETE (CURB AND GUTTER) 94
REMOVE MONUMENT SIGN 94
REMOVE ROADSIDE SIGN 95
RELOCATE MONUMENT SIGN 95
RELOCATE ROADSIDE SIGN 95
ADJUST FRAME AND COVER TO GRADE 95
ADJUST FRAME AND GRATE TO GRADE 96
RELOCATE FIRE HYDRANT 96
REMOVE BASE AND SURFACING 97
EXISTING HIGHWAY IRRIGATION FACILITIES 97
10-1.23 CLEARING AND GRUBBING 97
10-1.24 WATERING 98
10-1.25 EARTHWORK 98
10-1.26 ROCK EXCAVATION 99
10-1.27 SHOULDER BACKING 101
10-1.28 EROSION CONTROL (TYPE D) 102
10-1.29 REVEGETATION PLANTING (15 GALLON TREES) 106
10-1.30 TEMPORARY IRRIGATION SYSTEM 108
REMOVE EXISTING PLANTS FOR TRENCHING 110
COST BREAKDOWN 111
IRRIGATION SYSTEM CHECK 119
10-1.31 IRRIGATION CROSSOVERS 122
10-1.32 DECOMPOSED GRANITE 122
10-1.33 AGGREGATE BASE 124
10-1.34 ASPHALT CONCRETE 124
10-1.35 PILING 134
CAST-IN-DRILLED-HOLE CONCRETE PILES 134
10-1.36 STEEL STRUCTURES 148
ROTATIONAL CAPACITY TESTING PRIOR TO SHIPMENT TO JOB SITE 148
INSTALLATION TENSION TESTING AND ROTATIONAL CAPACITY TESTING AFTER ARRIVAL ON THE JOB SITE 153
WELDING 154
MEASUREMENT AND PAYMENT 154
10-1.37 CMU BLOCK WALL 154
MEASUREMENT AND PAYMENT 157

10-1.38 ARCHITECTURAL FINISH (STONE VENEER) ... 158
MATERIALS ... 158
PREPARING SURFACES ... 158
BOND COAT ... 158
LAYING VENEER ... 159
MEASUREMENT AND PAYMENT ... 159
10-1.39 MONUMENT SIGN ... 160
GENERAL ... 160
SMOOTH STUCCO FINISH ... 160
LETTERING ... 161
MEASUREMENT AND PAYMENT ... 161
10-1.40 ROADSIDE SIGNS ... 162
10-1.41 FURNISH SIGN ... 162
SHEET ALUMINUM ... 164
RETROREFLECTIVE SHEETING ... 164
PROCESS COLOR AND FILM ... 165
SINGLE SHEET ALUMINUM SIGN ... 165
MEASUREMENT AND PAYMENT ... 166
10-1.42 PLASTIC PIPE ... 166
10-1.43 OVERSIDE DRAINS ... 166
10-1.44 MISCELLANEOUS FACILITIES ... 166
10-1.45 INLET DEPRESSION ... 166
10-1.46 SLOPE PROTECTION ... 167
10-1.47 MISCELLANEOUS CONCRETE CONSTRUCTION ... 167
10-1.48 MISCELLANEOUS IRON AND STEEL ... 167
10-1.49 WOOD FENCE ... 168
10-1.50 TYPE BW AND TYPE WM FENCE ... 168
10-1.51 MARKERS AND DELINEATORS ... 168
10-1.52 THERMOPLASTIC TRAFFIC STRIPE AND PAVEMENT MARKING ... 168
10-1.53 PAVEMENT MARKERS ... 169
SECTION 10-2 HIGHWAY PLANTING AND IRRIGATION SYSTEMS ... 169
10-2.01 GENERAL ... 169
PROGRESS INSPECTIONS ... 169
10-2.02 EXISTING HIGHWAY PLANTING ... 170
10-2.03 EXISTING HIGHWAY IRRIGATION FACILITIES ... 170
LOCATE EXISTING CROSSOVERS AND CONDUITS ... 170
10-2.04 HIGHWAY PLANTING ... 171
HIGHWAY PLANTING MATERIALS ... 171
PESTICIDES ... 171
PREPARING PLANTING AREAS ... 172
PLANTING ... 172
PLANT ESTABLISHMENT WORK ... 173
10-2.05 IRRIGATION SYSTEMS ... 174
VALVE BOXES ... 174
BALL VALVES ... 175
GATE VALVES ... 175
ELECTRIC AUTOMATIC IRRIGATION COMPONENTS ... 175
REMOTE IRRIGATION CONTROL SYSTEM ... 177
TRAINING ... 180
MEASUREMENT AND PAYMENT ... 180
REMOTE CONTROL VALVE ACTUATOR SYSTEM ... 181
IRRIGATION CONTROLLER ENCLOSURE CABINET ... 181
IRRIGATION SYSTEMS FUNCTIONAL TEST ... 182
PIPE ... 183
DRIP IRRIGATION ... 183
WATER METER ... 185

BACKFLOW PREVENTER ASSEMBLIES 185
BACKFLOW PREVENTER ASSEMBLY ENCLOSURE 186
TESTING NEW BACKFLOW PREVENTERS 186
SPRINKLERS 186
WYE STRAINERS 187
FINAL IRRIGATION SYSTEM CHECK 187
10-2.06 ROOT BARRIERS 187
MATERIALS 187
APPLICATION 188
MEASUREMENT AND PAYMENT 188
10-2.07 GRAVEL MULCH 188
MATERIALS 188
SITE PREPARATION 190
PLACEMENT 190
MEASUREMENT 191
PAYMENT 191
SECTION 10-3. SIGNALS, LIGHTING AND ELECTRICAL SYSTEMS 192
10-3.01 DESCRIPTION 192
10-3.02 COST BREAK-DOWN 192
10-3.03 EQUIPMENT LIST AND DRAWINGS 192
10-3.04 MAINTAINING EXISTING AND TEMPORARY ELECTRICAL SYSTEMS 193
10-3.05 FOUNDATIONS 193
10-3.06 STANDARDS, STEEL PEDESTALS, AND POSTS 193
10-3.07 CONDUIT 193
10-3.08 PULL BOXES 194
10-3.09 CONDUCTORS AND WIRING 195
10-3.10 BONDING AND GROUNDING 195
10-3.11 SERVICE 196
10-3.12 NUMBERING ELECTRICAL EQUIPMENT 197
10-3.13 NUMBERING ELECTRICAL EQUIPMENT 197
10-3.14 MODEL 170 CONTROLLER ASSEMBLIES 198
10-3.15 VEHICLE SIGNAL FACES AND SIGNAL HEADS 199
10-3.16 LIGHT EMITTING DIODE SIGNAL MODULE 199
GENERAL 200
PHYSICAL AND MECHANICAL REQUIREMENTS 200
PHOTOMETRIC REQUIREMENTS 201
ELECTRICAL 204
QUALITY CONTROL PROGRAM 204
CERTIFICATE OF COMPLIANCE 206
QUALITY ASSURANCE TESTING (RANDOM SAMPLE TESTING) 206
WARRANTY 207
10-3.17 BATTERY BACKUP SYSTEM 207
10-3.18 PEDESTRIAN SIGNALS 208
10-3.19 LIGHT EMITTING DIODE PEDESTRIAN SIGNAL FACE MODULES 208
10-3.20 SIGNAL MOUNTING ASSEMBLIES 213
10-3.21 DETECTORS 214
10-3.22 EMERGENCY VEHICLE DETECTOR SYSTEM 215
GENERAL 215
EMITTER ASSEMBLY 216
OPTICAL DETECTION/DISCRIMINATOR ASSEMBLY 217
SYSTEM OPERATION 221
10-3.23 PEDESTRIAN PUSH BUTTONS 221
10-3.24 LUMINAIRES 221
10-3.25 PHOTOELECTRIC CONTROLS 222
10-3.26 REMOVING, REINSTALLING OR SALVAGING ELECTRICAL EQUIPMENT 222
10-3.27 PAYMENT 222

SECTION 10-4. WATER DISTRIBUTION SYSTEM 223
10-4.01 GENERAL 223
10-4.02 SUBMITTALS AND SUBSTITUTIONS 223
10-4.03 CONSTRUCTION OBSERVATION 224
10-4.04 DUCTILE IRON PRESSURE PIPE AND FITTINGS 224
10-4.05 PVC PRESSURE PIPE 225
10-4.06 VALVES 225
10-4.07 AIR VACUUM RELIEF VALVES 226
10-4.08 WATER METERS 226
10-4.09 BLOWOFFS 227
10-4.10 HYDRANTS 227
10-4.11 CORROSION CONTROL 227
10-4.12 HANDILING, UNLOADING AND DISTRIBUTIN MATERIALS 231
10-4.13 LINES AND GRADES 231
10-4.14 WATER PIPELINE CONSTRUCTION (GENERAL) 232
10-4.15 SHORING SAFETY PLAN 233
10-4.16 WATER PIPELINE TRENCH EXCAVATION 234
10-4.17 ROCK EXCAVATION AND BLASTING 235
10-4.18 COMPACTION AND COMPACTION TESTING (PIPE ZONE) 235
10-4.19 DISINFECTION AND ACCEPTANCE TESTING 236
10-4.20 CONNECTION TO EXISTING WATER DISTRIBUTION SYSTEM 240
10-4.21 REPAIRS REQUIRED BY TRENCH SETTLEMENT 240
10-4.22 WARRANTY 240
10-4.23 PAYMENT 240
SECTION 11. MODIFIED STANDARD SPECIFICATION SECTIONS 242
AMENDMENTS TO MAY 2006 STANDARD SPECIFICATIONS 242
SECTION 20: EROSION CONTROL AND HIGHWAY PLANTING 251
STANDARD PLANS LIST 314
ATTACHMENTS 318

COPY OF ENGINEER'S ESTIMATE
(NOT TO BE USED FOR BIDDING PURPOSES)

Item No.	Item Code	Item Description	Unit of Measure	Estimated Quantity	PFS
1	071325	Temporary Fence (Type ESA)	FT	3500	
2	074016	Construction Site Management	LS	1	
3	074017	Prepare Storm Water Pollution Prevention Plan	LS	1	
4	074020	Water Pollution Control	LS	1	
5	120090	Construction Area Signs	EA	8	S
6	120100	Traffic Control System	LS	1	S
7	120120	Type III Barricade	EA	0	
8	120149	Temporary Pavement Marking (Paint)	SQFT	359	
9	120159	Temporary Traffic Stripe (Paint)	FT	6011	
10	120165	Temporary Channelizers	EA	54	
11	129000	Temporary Railing (Type K)	FT	9800	
12	129110	Temporary Crash Cushion	EA	126	
13	150604	Remove Fence (Wood)	FT	1152	
14	150605	Salvage Fence (Wood)	FT	217	
15	150606	Remove Fence (BW)	FT	1423	
16	150710	Remove Traffic Stripe	FT	17758	
17	150713	Remove Pavement Marking	SQFT	1418	
18	150760	Remove Monument Sign	EA	2	
19	150805	Remove Culvert	EA	7	
20	151281	Remove Roadside Sign	EA	2	
21	151500	Remove Concrete (Curb and Gutter)	FT	218	
22	152351	Relocate Fire Hydrant	EA	1	
23	152390	Relocate Roadside Sign	EA	33	
24	152394	Relocate Monument Sign	EA	1	
25	152402	Adjust Water Valve Cover to Grade	EA	5	
26	152403	Adjust Water Meter Box to Grade	EA	1	
27	152440	Adjust Manhole to Grade	EA	4	
28	160101	Clearing and Grubbing	LS	1	

Item No.	Item Code	Item Description	Unit of Measure	Estimated Quantity	PFS
29	170101	Develop Water Supply	LS	1	
30	190101	Roadway Excavation	CY	22697	
31	190161	Rock Excavation	CY	2666	
32	190185	Shoulder Backing	CY	502	
33	194001	Ditch Excavation	FT	3979	
34	194002	Basin Excavation	CY	83	
35	203016	Erosion Control (Type D)	SQYD	8855	S
36	200001	Revegetation Planting (15 Gallon Trees)	EA	622	
37	206401	Temporary Irrigation Facilities (Revegetation Planting)	LS	1	
38	200101	Imported Topsoil	CY	1025	
39	200121	Cultivate	LS	1	
40	202006	Soil Amendment	CY	35	
41	202011	Mulch	CY	102	
42	202031	Fertilizer Packets	EA	1911	
43	204001	Plant (Group A)	EA	642	
44	204002	Plant (Group B)	EA	303	
45	204021	Plant (Group U)	EA	40	
46	204099	Plant Establishment Work (90 WD) (Highway Planting)	LS	1	
47	204100	Plant Establishment Work (600 WD) (Revegetation Planting)	LS	1	
48	206003	Plastic Header Board	FT	2252	
49	039125	Gravel Maintenance Strip	CY	62	
50	034567	Root Barrier	FT	2252	
51	037556	1-1/2” Flow Sensor Electric Transmitter	EA	1	
52	206560	Control and Neutral Conductors	LS	1	
53	208500	Paige Cable Conduit – 1¼” PVC Sch 40	FT	20	
54	039229	2” Conduit – Wiring (Sch 40)	FT	50	
55	840660	Concrete Pull Box	EA	2	
56	206611	1” Electric Remote Control Valve	EA	18	
57	206613	1½” Master Electric Control Valve	EA	1	

Item No.	Item Code	Item Description	Unit of Measure	Estimated Quantity	PFS
58	206614	1” Remote Control Valve / Filter	EA	18	
59	037793	Air Relief Valve	EA	18	
60	037794	Flush Valve	EA	18	
61	037675	32 Station Irrigation Controller	EA	1	
62	038065	Controller Enclosure Cabinet / Pad	EA	1	
63	208249	¾” Plastic Pipe (PR 200)(Lateral Line)	FT	325	
64	208250	1” Plastic Pipe (PR 200)(Lateral Line)	FT	40	
65	208502	1½” Plastic Pipe (Sch 40)(Mainline) (Supply Line)	FT	825	
66	208503	1¼” Plastic Pipe (Sch 40)(Mainline) (Supply Line)	FT	500	
67	208504	1” Plastic Pipe (Sch 40)(Mainline) (Supply Line)	FT	120	
68	208505	Subsurface Dripline	LS	1	
69	208492	1½” Gate Valve	EA	1	
70	208517	1” Quick Coupling Valve	EA	19	
71	208683	1” Ball Valve	EA	9	
72	208420	Backflow Prevention Device	EA	1	
73	208421	Backflow Enclosure	EA	1	
74	208304	Water Meter (Incl. Tap)	EA	1	
75	170101	Water Development Fees	LS	1	
76	035048	Irrigation Electrical Service	LS	1	
77	035049	Electrical Meter / NEMA Enclosure	EA	1	
78	208698	6" Conduit	FT	126	
79	034267	Decomposed Granite	CY	126	
80	260201	Aggregate Base (Class 2)	CY	10389	
81	390102	Asphalt Concrete (Type A)	TON	10671	
82	390106	Asphalt Concrete (Open Graded)	TON	1554	
83	397040	Place Asphalt Concrete Dike (Type A)	FT	3040	
84	510502	Minor Concrete (Minor Structure)	CY	23	F
85	518002	CMU Block Wall	SQFT	13882	F S
86	518206	Architectural Finish (Stone Veneer)	SQFT	1930	S

Item No.	Item Code	Item Description	Unit of Measure	Estimated Quantity	PFS
87	519999	Monument Sign	EA	2	
88	664015	18" HDPE	FT	871	
89	664020	24" HDPE	FT	730	
90	664028	30" HDPE	FT	449	
91	691900	Flume Downdrain	FT	42.5	
92	692001	Entrance Taper	EA	11	
93	703272	36" Corrugated Steel Pipe (CSP) Riser	FT	43	
94	705044	18" Flared End Section	EA	2	
95	705045	24" Flared End Section	EA	1	
96	705338	30" Flared End Section	EA	4	
97	707217	36" Precast Storm Drain Manhole	EA	2	
98	721009	Rock Slope Protection (Facing)	CY	68	
99	729010	Rock Slope Protection Fabric	SQFT	2880	
100	731501	Minor Concrete (Curb)	CY	75	
101	731504	Minor Concrete (Curb & Gutter)	CY	10	
102	731521	Minor Concrete (Sidewalk)	CY	5	
103	731623	Minor Concrete (Curb Ramp)	CY	2	
104	750001	Miscellaneous Iron & Steel	LB	3783	P F S
105	800423	Fence (Type WM)	FT	1460	S
106	800701	Fence (Wood)	FT	203	S
107	840501	Thermoplastic Traffic Stripe	FT	18961	S
108	840660	Thermoplastic Pavement Marking	SQFT	1629	S
109	861502	Signal & Lighting	LS	1	P F S
110	900000	24" Ductile Iron Pipe Water Line & Fittings	FT	3106	
111	900001	24” Butterfly Isolation Valves	EA	5	
112	900002	6” Low Point Blowoff	EA	4	
113	900003	4” End Line Temp Blowoff	EA	2	
114	900004	1” Air Vacuum Relief Valve	EA	5	
115	900005	Pressure Test	LS	1	
116	900006	Pipeline Disinfection and Testing	LS	1	

Item No.	Item Code	Item Description	Unit of Measure	Estimated Quantity	PFS
117	999990	MOBILIZATION 10%	LS	1	

COUNTY OF PLACER
DEPARTMENT OF PUBLIC WORKS

SPECIAL PROVISIONS

AUBURN FOLSOM ROAD WIDENING, SOUTH PHASE

Contract No. 1001

SECTION 1. SPECIFICATIONS AND PLANS

1-1.01 GENERAL

The work embraced herein shall be done in accordance with the Project Plans, Standard Specifications dated May, 2006, the Standard Plans dated May, 2006, of the California Department of Transportation, and the Placer County General Specifications dated October, 1996, insofar as the same may apply and in accordance with the following Special Provisions.

Amendments to the Standard Specifications set forth in these Special Provisions shall be considered as part of the Standard Specifications for the purposes set forth in Section 5-1.04, "Coordination and Interpretation of Plans, Standard Specifications and Special Provisions," of the Standard Specifications. Whenever either the term "Standard Specifications is amended" or the term "Standard Specifications are amended" is used in the Special Provisions, the text following said term shall be considered an amendment to the Standard Specifications. In case of conflict between such amendments and the Standard Specifications, the amendments shall take precedence over and be used in lieu of the conflicting portions.

In case of conflict between the Placer County General Specifications, Standard Specifications and these Special Provisions, the Special Provisions shall govern, take precedence over, and be used in lieu of such conflicting portions. The Standard Specifications and Standard Plans shall govern over the Placer County General Specifications.

Work associated with furnishing and installing main water transmission pipeline shall conform to the standard details and special provisions of the San Juan Water District as specified in Section 10-4, "Water Distribution System", of these special provisions.

1-1.02 DEFINITIONS AND TERMS:

As used herein, unless the context otherwise requires, the following terms have the following meaning:

County: The County of Placer.

Department: The Board of Supervisors of the County of Placer, State of California, except when referring to documents, laws or departments of the State of California. Any reference in question shall be as designated by the Engineer.

Department of Transportation: The Board of Supervisors of the County of Placer, State of California, except when referring to documents, laws or departments of the State of California. Any reference in questions shall be as designated by the Engineer.

Director of Transportation: The Director of Public Works of the County of Placer, State of California.

District Director of the District: The Director of Public Works of the County of Placer, State of California.

Engineer: The Director of Public Works of the County of Placer, State of California, acting either directly or through properly authorized agents, such agents acting within the scope of the particular duties entrusted to them.

Laboratory: The established laboratory of the Materials and Research Department of the Department of Transportation of the State of California or laboratories authorized by the Engineer to test materials and work involved in the Contract, except when referring to documents, laws or departments of the State of California. Any reference in question shall be as designated by the Engineer.

Standard Plans: The May 2006 edition of the Standard Plans of the State of California, Department of Transportation. Any reference therein to the State of California or a State agency, office, or officer shall be interpreted to refer to the County or it's corresponding agency, office, or officer acting under this contract.

Standard Specifications: The May 2006 edition of the Standard Specifications of the State of California, Department of Transportation. Any reference therein to the State of California or a State agency, office, or officer shall be interpreted to refer to the County or it's corresponding agency, office, or officer acting under this contract.

State: The County of Placer, except when referring to documents, laws or departments of the State of California. Any reference in question shall be as designated by the Engineer.

State Highway Engineer: The Director of Public Works of the County of Placer, State of California.

Transportation Building, Sacramento: Board of Supervisors office of the County of Placer, State of California except when referring to documents, laws or departments of the State of California. Any reference in question shall be as designated by the Engineer.

SECTION 2. PROPOSAL REQUIREMENTS AND CONDITIONS

2-1.01 GENERAL

The bidder's attention is directed to the provisions in Section 2, "Proposal Requirements and Conditions," of the Standard Specifications and these Special Provisions for the requirements

and conditions which the bidder must observe in the preparation of the proposal form and the submission of the bid.

Each proposal shall include unit costs, and total costs for the base bid.

Bidders are required to specify a physical business street address to receive certified mail in accordance with the Proposal. The County shall be notified in writing a minimum of thirty (30) days in advance of any changes of address.

The first sentence of the second paragraph in Section 2-1.05, “Proposal Forms,” of the Standard Specifications is amended to read:

> The Proposal form is bound together with the Contract.

In addition to the subcontractors required to be listed in conformance with Section 2-1.06, “Required Listing of Proposed Subcontractor,” of these Special Provision, each proposal shall have listed therein the portion of work that will be done by each subcontractor listed. Each Proposal shall have listed therein the name and address of each DBE subcontractor to be used for credit in meeting the goals and to whom the bidder proposes to directly subcontract potion of the work. The listing subcontractor shall also set forth the portion of work that will be done by each subcontractor listed. A sheet for listing the subcontractors is included in the Proposal.

The form of Bidder's Bond mentioned in the last paragraph in Section 2-1.07, "Proposal Guaranty," of the Standard Specifications will be found following the signature page of the Proposal annexed hereto.

The bidder’s attention is directed to the provisions in Section 2, “Proposal Requirements and Conditions,” of the Standard Specifications and these special provisions for the requirements and conditions which the bidder must observe in the preparation of the proposal form and the submission of the bid.

In conformance with Public Contract Code Section 7106, a Noncollusion Affidavit is included in the Proposal. Signing the Proposal shall also constitute signature of the Noncollusion Affidavit.

The contractor, sub recipient or subcontractor shall not discriminate on the basis of race, color, national origin, or sex in the performance of this contract. The contractor shall carry out applicable requirements of 49 CFR part 26 in the award and administration of Department of Transportation assisted contracts. Failure by the contractor to carry out these requirements is a material breach of this contract, which may result in the termination of this contract or such other remedy as the recipient deems appropriate. Each subcontract signed by the bidder must include this assurance.

2-1.02 REQUIRED LISTING OF PROPOSED PRODUCTS "OR EQUALS" WITH BID PROPOSAL:

On the sheet provided herein, to be submitted as part of the proposal, the bidder shall list each proposed substitution of an "equal" product. The bidder shall identify the proposed substitution by the section of the specifications that specifies the product, the name of the product proposed to be substituted out, and the name and manufacturer of the product proposed to be substituted. Prior to the award of the Contract and upon the request of the Engineer, the bidder shall submit the written request for substitution within three (3) days. The request shall be accompanied by evidence satisfactory to the Engineer that the materials and products proposed for use are equal to or better than the materials and products specified or detailed on the plans. The burden of proof as to the quality and suitability of substitutions shall be upon the bidder. Failure to submit the information as requested by the Engineer shall be deemed a voluntary withdrawal of the proposed substitution.

No requests for any substitution shall be allowed unless listed on the sheet provided. No requests for substitution shall be allowed after the opening of the bid. Requests for substitution shall be reviewed and considered by the Engineer promptly after the award of the contract to the lowest responsible Bidder. In its sole discretion, the Engineer may request additional information about the proposed substitution.

The decision by the Engineer as to whether a proposed substitution is an "Equal" product shall be made by the Engineer based upon the information submitted and will be final.

The Engineer will be the sole judge as to whether a proposed substitution is an "Equal" product. The Engineer's decision will be made based upon the information submitted and will be final.

A sheet for listing the proposed substitutions of an "Equal" product, as required herein, is included in the Proposal.

2-1.03 DBE GOAL FOR THIS PROJECT

It is the policy of the County that Disadvantaged Business Enterprises (DBEs), as defined in Part 26, Title 49 CFR, shall be encouraged to participate in the performance of County contracts. The Contractor should ensure that DBEs, as defined in Part 26, Title 49 CFR, have the opportunity to participate in the performance of this contract and shall take all necessary and reasonable steps, as set forth in Part 26, Title 49 CFR, for this assurance. The Contractor shall not discriminate on the basis of race, color, national origin, or gender in the award and performance of subcontracts. Failure to carry out the requirements of this paragraph shall constitute a breach of contract and may result in termination of this contract or other remedy the County may deem appropriate.

Bidders shall be fully informed respecting the requirements of the Regulations and are urged to obtain DBE participation in this project, although there is no specific goal for DBE participation.

Caltrans has engaged the services of a contractor to provide supportive services to contractors and subcontractors to assist in obtaining DBE participation on federally funded construction projects. Bidders and potential subcontractors should check the Caltrans website at http://www.dot.ca.gov/hq/bep to verify the current availability of this service.

2-1.04 REQUIRED LISTING OF PROPOSED SUBCONTRACTORS

Section 2-1.054, "Required Listing of Proposed Subcontractors" of the Standard Specifications is amended in its entirety to read:

> Each proposal shall have listed therein the name and address, Contractor's license classification and license number of each Subcontractor the bidder proposes to subcontract portions of the work in the amount in excess of $5000, and designate portion and percentage of the work to be performed by the Subcontractor. The Subletting and Subcontracting Fair Practices Act, commencing with Section 4100 of the Public Contract Code is otherwise fully applicable to this Contract. The bidder's attention is directed to other provisions of said Act related to the imposition of penalties for a failure to observe its provisions by using unauthorized subcontractors or by making unauthorized substitutions.

In addition to the Subcontractors required to be listed, each proposal shall have listed herein the **name and address**, and **license designation number** of each Subcontractor to whom the bidders proposes to directly subcontract portions of the work. The list of Subcontractors shall also set forth the portion of work that will be done by each Subcontractor listed.

A sheet for listing the subcontractors, as required herein, is included in the Proposal.

2-1.05 PROPOSAL GUARANTY

The form of Bidder's Bond mentioned in the last paragraph in Section 2-1.07, "Proposal Guaranty," of the Standard Specifications will be found following the signature page of the Proposal annexed hereto.

2-1.06 NON-COLLUSION AFFIDAVIT

In accordance with Public Contract Code 7106, a Non-Collusion is included in the proposal. Signing the proposal shall also constitute signature of the Non-Collusion Affidavit.

SECTION 3. SUBMISSION OF DBE INFORMATION, AWARD, AND EXECUTION OF CONTRACT

3-1.01 GENERAL

The bidder's attention is directed to the provisions in Section 3, "Award and Execution of Contract," of the Standard Specifications and these Special Provisions for the requirements and conditions concerning submittal of DBE information, award, and execution of contract.

3-1.02 AWARD OF CONTRACT

Section 3-1.01 of the Standard Specifications is amended to read:

3-1.01 Award of Contract — The right is reserved to reject any and all proposals. The award of the contract, if it be awarded, will be to the lowest responsible bidder whose proposal complies with all the requirements prescribed. Such award, if made, will be made within 90 days after the opening of the proposals. This period will be subject to extension for such further period as may be agreed upon in writing between the Department and the bidder concerned. All bids will be compared on the basis of the Engineer's Estimate of the quantities of work to be done.

3-1.03 CONTRACT BONDS

Contractor shall provide, at the time of the execution of the agreement or contract for work, and at his own expense, a surety bond ("Performance Bond") in an amount equal to at least 100 percent (100%) of the contract price as security for the faithful performance of said agreement within the time prescribed, in a manner satisfactory to the Engineer, and that all materials and workmanship will be free from original or developed defects. This Performance Bond must remain in effect until the end of all warranty periods set forth in the Special Provisions. Contractor shall also provide, at the time of the execution of the agreement or contract for the work, and at his own expense, a separate surety bond ("Payment Bond") in an amount equal to at least 100 percent (100%) of the contract price as security for the payment of all persons performing labor and furnishing materials in connection with said agreement. This Payment Bond shall be maintained by the Contractor in full force and effect until the work is accepted by the County and until all claims for materials and labor are paid, and shall otherwise comply with Civil Code. Sureties on each of said bonds shall be satisfactory to the County Attorney.

The Contractor may terminate the bonds defined above prior to completion of plant establishment work, provided all other work is complete and accepted by the County, claims are paid and warranty periods have expired, and provided separate surety bonds (“Performance Bond” and “Payment Bond”) as defined above, but in an amount equal to at least 100 percent (100%) of the contract price for plant establishment work are in effect. Either the separate bonds for plant establishment or the original surety bonds for all work shall be in effect throughout the plant establishment periods specified in these special provisions.

Should any bond become insufficient, the Contractor shall renew the bond within ten (10) working days after receiving notice from the Engineer.

Should any Surety at any time be unsatisfactory to the County, notice will be given the Contractor to that effect. No further payments shall be deemed due or will be made under said agreement until a new Surety shall qualify and be accepted by the County.

Changes in said agreement of extensions of time, made pursuant to the agreement, shall in no way release the Contractor or Surety from its obligations. Notice of such changes or extensions shall be waived by the Surety.

SECTION 4. BEGINNING OF WORK, TIME OF COMPLETION AND LIQUIDATED DAMAGES

4-1.01 GENERAL

Attention is directed to the provisions in Section 8-1.03, "Beginning of Work," in Section 8-1.06, "Time of Completion," and in Section 8-1.07, "Liquidated Damages," of the Standard Specifications and these special provisions.

The Contractor shall furnish the Engineer with a statement from the vendor that the order for the electrical materials required for this contract has been received and accepted by the vendor; and the statement shall be furnished within 15 calendar days after the contract has been approved by the Placer County Board of Supervisors. The statement shall give the date that the electrical materials will be shipped. If the Contractor has the necessary materials on hand, the Contractor will not be required to furnish the vendor's statement.

The Contractor shall begin work within 30 calendar days after the contract has been approved by the Placer County Board of Supervisors and being instructed in writing by Placer County to proceed with the work. Due to the project site being critical intersections and due to seasonal constraints, time is of the essence to complete the contract work.

The work (except plant establishment work) shall be diligently prosecuted to completion before the expiration of **240 working days** beginning on the date that work begins or beginning on the thirtieth calendar days after approval by the Placer County Board of Supervisors and being instructed in writing by Placer County to proceed with the work, whichever occurs first.

The Contractor shall pay to the County the sum of $5000 per day, for each and every calendar day's delay in finishing the work (except plant establishment work) in excess of the number of working days prescribed above.

The 72 hours advance notice before beginning work specified in Section 8-1.03, "Beginning of Work," of the Standard Specifications is changed to 5 days advance notice for this project.

The work, including plant establishment work (highway landscaping) and plant establishment work (mitigation planting), shall be diligently prosecuted to completion before the expiration of **840 WORKING DAYS**.

The Contractor shall pay to the County the sum of $600 per day for each day's delay in completing the plant establishment work.

In no case will liquidated damages of more than $5000 per day be assessed.

4-1.02 PRE-CONSTRUCTION CONFERENCE

A pre-construction conference will be held at the office of the Director of Public Works for the purpose of discussing with the Contractor the scope of work, contract drawings, specifications, existing conditions, environmental awareness and mitigation measures, materials to be ordered, equipment to be used, and all essential matters pertaining to the prosecution and the satisfactory completion of the project as required. The Contractor’s representative at this conference shall include all major superintendents for the work and may include major subcontractors. A “Key Personnel and Emergency Phone Numbers” list (for which these key personnel could be contacted 24 hours per day, 7 days a week) shall be submitted to the County. Attendance by the Contractor or the Contractor's authorized representative is mandatory.

Full compensation for conforming to the provisions of this section, not otherwise provided for in other sections of these special provisions, shall be considered as included in prices paid for the various Contract items of work involved and no additional compensation will be allowed therefore.

SECTION 5. GENERAL

SECTION 5.1 MISCELLANEOUS:

THE CONTRACTOR AND ALL SUBCONTRACTORS SHALL COMPLY WITH CALIFORNIA LABOR CODE SECTIONS 1774 AND 1775, AND RELATED CODES.

5-1.01 LABOR NONDISCRIMINATION

Attention is directed to the following Notice that is required by Chapter 5 of Division 4 of Title 2, California Code of Regulations.

NOTICE OF REQUIREMENT FOR NONDISCRIMINATION PROGRAM (GOV. CODE, SECTION 12990)

Your attention is called to the "Nondiscrimination Clause," set forth in Section 7-1.01A(4), "Labor Nondiscrimination," of the Standard Specifications, which is applicable to all nonexempt State contracts and subcontracts, and to the "Standard California Nondiscrimination Construction Contract Specifications" set forth therein. The specifications are applicable to all nonexempt State construction contracts and subcontracts of $5000 or more.

5-1.02 LABOR CODE REQUIREMENTS

Attention is directed to the provisions in Section 7-1.01A(1), "Hours of Labor", Section 7-1.01A(2), "Prevailing Wage", Section 7-1.01A(2)(a), "Travel and Subsistence Payments", and Section 7-1.01A(3), "Payroll Records" of the Standard Specifications.

The general prevailing wage rates and any applicable changes to these wage rates are available at the Labor Compliance Office at the offices of the District Director of Transportation for the district in which the work is located. General prevailing wage rates are also available from the California Department of Industrial Relation's Internet Web Site at:

http://www.dir.ca.gov.

Attention is directed to the Federal minimum wage rate requirements. If there is a difference between the minimum wage rates predetermined by the Secretary of Labor and the general prevailing wage rates determined by the Director of the California Department of Industrial Relations for similar classifications of labor, the Contractor and subcontractors shall pay not less than the higher wage rate.

5-1.03 CONTRACTOR'S LICENSING LAWS

Attention is directed to the requirements specified in Section 7-1.01C, "Contractor's Licensing Laws," of the Standard Specifications. The Contractor shall possess a valid California Class A contractor's license, or a combination of the following classes: C-8 Concrete Contractor, C-12 Earthwork and Paving Contractor, C-13 Fencing Contractor, C-21 Building Moving and Demolition Contractor, C-27 Landscaping Contractor, C-32 Parking and Highway Improvement Contractor, C-34 Pipeline Contractor, C-50 Reinforcing Steel Contractor, C-60 Welding Contractor, and D-49 Tree Service Contractor, and all other classes required by the categories and types of work included in this contract at the time of the bid award. All licenses shall remain in effect throughout the term of this contract.

5-1.04 ARBITRATION

Section 9-1.10, "Arbitration," of the Standard Specifications is amended in its entirety to read as follows:

Section 9-1.10, "Dispute Resolution"

9-1.10 All claims filed with the County must be in writing and include the documents necessary to substantiate the claim. Claims must be filed within the time limits set forth in this contract. In no circumstances, however, may a claim be filed after the day of final payment. Nothing in this subsection is intended to extend the time limit or supersede notice requirements for the filing of claims as set forth elsewhere in this contract.

1) Claims of $50,000.00 or Less

(a) The County will respond in writing to all written claims less than or equal to fifty thousand dollars ($50,00.00) within forty-five (45) days of receipt of the claim. Within thirty (30) days of receipt of the claim, the County may request any additional documentation supporting the claim or relating to defenses or claims the County may have against the claimant.

(b) If additional information is thereafter required, it shall be requested and provided pursuant to this subsection, upon mutual agreement of the County and the claimant.

(c) The County's written response to the claim, as further documented, shall be submitted to the claimant within fifteen (15) days after receipt of the further documentation or within a period of time no greater than that taken by the claimant in producing the additional information, whichever is greater.

2) Claims Between $50,000.01 and $375,000.00

(a) The County will respond in writing to all written claims between fifty thousand dollars and one cent ($50,00.01) and less than or equal to three hundred seventy-five thousand dollars ($375,000.00),within sixty (60) days of receipt of the claim. Within thirty (30) days of receipt of the claim, the County may request,

in writing, any additional documentation supporting the claim or relating to defense to the claim the County may have against the claimant.

(b) If additional information is thereafter required, it shall be requested and provided pursuant to this Subdivision, upon mutual agreement of the County and the claimant.

(c) The County's written response to the claim, as further documented, shall be submitted to the claimant with in thirty (30) days after receipt of the further documentation or within a period of time no greater than that taken by the claimant in producing the additional information or requested documents, whichever is greater.

3) Claims in Excess of $375,000.00. The County-shall, within a reasonable time after the presentation of any claim in excess of $375,000.00, make a decision in writing on such claim.

4) Meet and Confer Conference

(a) If the claimant disputes the County's written response, or the County fails to respond within the time prescribed, the claimant may so notify the County, in writing, either within fifteen (15) days of receipt of the County's response of within fifteen (15) days of the County's failure to respond within the time prescribed, respectively, and demand an informal conference to meet and confer for settlement of the issues in dispute. Upon a demand, the County shall schedule a meet and confer conference within thirty (30) days for settlement of the dispute.

(b) If, following the meet and confer conference, the claim or any portion thereof remains in dispute, the claimant may file a claim pursuant to Chapter 1 (commencing with Section 900) and Chapter 2 (commencing with Section 910) of Part 3 of Division 3.6 of Title 1 of the California Government Code. For the purposes of those provisions, the running of the period of time within which a claim must be filed shall be tolled from the time the claimant submits his or her written claim pursuant to this Section until the time that claim is denied as a result of the meet and confer process, including any period of time utilized by the meet and confer process.

5) Contractor's Duty During Claim Resolution. The Contractor shall proceed with the Work in accordance with the plans and specifications and determinations and instructions of the County Engineer during the resolution of any claims disputes.

6) Certification. The Contractor shall certify in writing, at the time of submission of any claim, as follows:

I certify under penalty of perjury under the laws of the State of California, that the claim is made in good faith, that the supporting data are accurate and complete, and that the

amount requested accurately reflects the monies due for work performed under the Contract for which the County of Placer is liable.

By:_____
(Contractor's signature)

7) County Remedies. In the event the Contractor refuses or neglects to make good any loss or damage for which the Contractor is responsible under this Contract, the County may itself, or by the employment of others, make good any such loss or damage, and the cost and expense of doing so, including any reasonable engineering, legal and other consultant fees, and any costs of administrative and managerial services, shall be charged to the Contractor. Such costs and expenses may be deducted by the County from claims for payment made by the Contractor for work completed or remaining to be completed.

8) Assignment. In entering into a public works contract or a subcontract to supply goods, services, or materials pursuant to this contract, the Contractor and all subcontractors shall offer and agree to assign to the County all rights, title, and interest in and to all causes of action it may have under section 4 of the Clayton Act (15 U.S.C. Sec. 15) or under the Cartwright Act (Chapter 2 [commencing with Section 16700] of Part 2 of Division 7 of the Business and Professions Code), arising form purchases of goods, services or materials pursuant to the public works contract or subcontract. This assignment shall be made and become effective at the time the County tenders final payment to the Contractor, without further acknowledgment by the parties.

9) Contractor Waiver and Limitation. The Contractor agrees that it can be adequately compensated by money damages for any breach of this Contract which may be committed by the County and hereby agrees that no default, act, or omission of the County or the Engineer, shall constitute a material breach of the Contract entitling the Contractor to cancel or rescind the provisions of this Contract or (unless the County shall so consent or direct in writing) to suspend or abandon performance of all or any part of the work. The Contractor hereby waives any and all rights and remedies to which it might otherwise be or become entitled, save only its right to money damages.

10) Venue. Any litigation arising out of this Contract shall be brought in the Superior Court of Placer County, and the Contractor hereby waives the removal provisions of Code of Civil Procedure Section 394.

5-1.05 NOTICE OF POTENTIAL CLAIM:

Attention is directed to the requirements specified in Section 9-1.04, "Notice of Potential Claim," of the Standard Specifications.

5-1.06 FINAL PAYMENT AND CLAIMS

Attention is directed to Section 9-1.07B, "Final Payment and Claims," of the Standard Specifications.

If the Contractor files a timely written statement of claims in response to the proposed final estimate, the County will submit a claim position letter to the Contractor by hand delivery or deposit in the U.S. mail. The claim position letter will delineate the County's position on the Contractor's claims. If the Contractor disagrees with the claim position letter, the Contractor shall submit a written notification of its disagreement to be received by the County not later than 15 days after the Contractor's receipt of the claim position letter. The written notification of disagreement shall set forth the basis for the Contractor's disagreement and be submitted to the office designated in the claim position letter. The Contractor's failure to provide a timely, written notification of disagreement shall constitute the Contractor's acceptance and agreement with the determinations provided in the claim position letter and with final payment pursuant to the claim position letter.

If the Contractor files a timely notification of disagreement with the County claim position letter, the County Director of Public Works or a board of review appointed by the County Director of Public Works shall review claims that remain in dispute and may meet with the Contractor within 45 days after receipt by the County of the notification of disagreement. Attendance by the Contractor at the County meeting concerning the notification of disagreement shall be mandatory.

If the County fails to submit a claim position letter to the Contractor within 135 days after the acceptance of the contract and the Contractor has claims that remain in dispute, the Contractor may request a meeting with the County Director of Public Works or a board of review appointed by the County Director of Public Works to review claims that remain in dispute. The Contractor's request for a meeting shall identify the claims that remain in dispute. If the Contractor files a request for a meeting, the County Director of Public Works or a board of review appointed by the County Director of Public Works will meet with the Contractor within 45 days after the County receives the request for the meeting. Attendance by the Contractor at this review meeting shall be mandatory.

Failure of the Contractor to file a timely written statement of claims in response to the proposed final estimate, or to file a timely notification of disagreement with the County’s claim position letter, or to attend the County’s review meeting shall constitute a failure to pursue diligently and exhaust the administrative remedies in the contract and shall be a bar to future legal proceedings by Contractor.

5-1.07 EXCLUSION OF RETENTION

In conformance with 49 CFR, Part 26, Subpart B, Section 26.29 (b)(1), the retention of proceeds required by Public Contract Code Section 10261 shall not apply. In conformance with Public Contract Code 7200 (b), in subcontracts between the Contractor and a subcontractor and in subcontracts between a subcontractor and any subcontractor thereunder, retention proceeds shall not be withheld, and the exceptions provided in Public Contract Code 7200 (c) shall not apply. At the option of the Contractor, subcontractors may be required to furnish payment and performance bonds issued by an admitted surety insurer.

The third paragraph of Section 9-1.06, "Partial Payments," of the Standard Specifications, and Section 9-1.065, "Payment of Withheld Funds," of the Standard Specifications shall not apply.

5-1.08 UNSATISFACTORY PROGRESS

If the number of working days charged to the contract exceeds 75 percent of the working days in the current time of completion and the percent working days elapsed exceeds the percent work completed by more that 15 percentage points, the Department will withhold 10 percent of the amount due on the current monthly estimate.

The percent working days elapsed will be determined from the number of working days charged to the contract divided by the number of contract working days in the current time of completion, expressed as a percentage. The number of contract working days in the current time of completion shall consist of the original contract working days increased or decreased by time adjustments approved by the Engineer.

The percent work completed will be determined by the Engineer from the sum of payments made to date plus the amount due on the current monthly estimate, divided by the current total estimated value of the work, expressed as a percentage.

When the percent of working days elapsed minus the percent of work completed is less than or equal to 15 percentage points, the funds withheld shall be returned to the Contractor with the next monthly progress payment.

Funds kept or withheld from payment, due to the failure of the Contractor to comply with the provisions of the contract, will not be subject to the requirements of the Public Contract Code 7107 or to the payment of interest pursuant to Public Contract Code Section 10261.5.

5-1.09 INTEREST ON PAYMENTS

Interest shall be payable on progress payments, payments after acceptance, final payments, extra work payments, and claim payments as follows:

A. Unpaid progress payments, payment after acceptance, and final payments shall begin to accrue interest 30 days after the Engineer prepares the payment estimate.
B. Unpaid extra work bills shall begin to accrue interest 30 days after preparation of the first pay estimate following receipt of a properly submitted and undisputed extra work bill. To be properly submitted, the bill must be submitted within 7 days of the performance of the extra work and in conformance with the provisions in Section 9-1.03C, "Records," and Section 9-1.06, "Partial Payments," of the Standard Specifications. An undisputed extra work bill not submitted within 7 days of performance of the extra work will begin to accrue interest 30 days after the preparation of the second pay estimate following submittal of the bill.
C. The rate of interest payable for unpaid progress payments, payments after acceptance, final payments, and extra work payments shall be 10 percent per annum.
D. The rate of interest payable on a claim, protest or dispute ultimately allowed under this contract shall be 6 percent per annum. Interest shall begin to accrue 61 days after the

Contractor submits to the Engineer information in sufficient detail to enable the Engineer to ascertain the basis and amount of said claim, protest or dispute.

The rate of interest payable on any award in arbitration shall be 6 percent per annum if allowed under the provisions of Civil Code Section 3289.

5-1.10 PUBLIC SAFETY

The Contractor shall provide for the safety of traffic and the public in conformance with the provisions in Section 7-1.09, "Public Safety," of the Standard Specifications and these special provisions.

The Contractor shall install temporary railing (Type K) between a lane open to public traffic and an excavation, obstacle or storage area when the following conditions exist:

A. Excavations.—The near edge of the excavation is 3.6 m {12 feet} or less from the edge of the lane, except:

   1. Excavations covered with sheet steel or concrete covers of adequate thickness to prevent accidental entry by traffic or the public.
   2. Excavations less than 0.3-m {one foot} deep.
   3. Trenches less than 0.3-m {one foot} wide for irrigation pipe or electrical conduit, or excavations less than 0.3-m {one foot} in diameter.
   4. Excavations parallel to the lane for the purpose of pavement widening or reconstruction.
   5. Excavations in side slopes, where the slope is steeper than 1:4 (vertical:horizontal).
   6. Excavations protected by existing barrier or railing.

B. Temporarily Unprotected Permanent Obstacles.—The work includes the installation of a fixed obstacle together with a protective system, such as a sign structure together with protective railing, and the Contractor elects to install the obstacle prior to installing the protective system; or the Contractor, for the Contractor's convenience and with permission of the Engineer, removes a portion of an existing protective railing at an obstacle and does not replace such railing complete in place during the same day.

C. Storage Areas.—Material or equipment is stored within 3.6 m {12 feet} of the lane and the storage is not otherwise prohibited by the provisions of the Standard Specifications and these special provisions.

The approach end of temporary railing (Type K), installed in conformance with the provisions in this section "Public Safety" and in Section 7-1.09, "Public Safety," of the Standard Specifications, shall be offset a minimum of 4.6 m {15 feet} from the edge of the traffic lane open to public traffic. The temporary railing shall be installed on a skew toward the edge of the traffic lane of not more than 0.3-m {one foot} transversely to 3 m {10 feet} longitudinally with respect to the edge of the traffic lane. If the 4.6-m {15-foot} minimum offset cannot be achieved, the temporary railing shall be installed on the 10 to 1 skew to obtain the maximum available offset between the approach end of the railing and the edge of the traffic lane, and an

array of temporary crash cushion modules shall be installed at the approach end of the temporary railing.

Temporary railing (Type K) shall conform to the provisions in Section 12-3.08, "Temporary Railing (Type K)," of the Standard Specifications. Temporary railing (Type K), conforming to the details shown on 2002 Standard Plan T3, may be used. Temporary railing (Type K) fabricated prior to January 1, 1993, and conforming to 1988 Standard Plan B11-30 may be used, provided the fabrication date is printed on the required Certificate of Compliance.

Temporary crash cushion modules shall conform to the provisions in "Temporary Crash Cushion Module" of these special provisions.

Except for installing, maintaining and removing traffic control devices, whenever work is performed or equipment is operated in the following work areas, the Contractor shall close the adjacent traffic lane unless otherwise provided in the Standard Specifications and these special provisions:

Approach Speed of Public Traffic {Posted Limit} Kilometers{Miles Per Hour}	Work Areas
Over 72 {45}	Within 1.8 m {6 feet} of a traffic lane but not on a traffic lane
56 to 72 {35 to 45}	Within 0.9-m {3 feet} of a traffic lane but not on a traffic lane

The lane closure provisions of this section shall not apply if the work area is protected by permanent or temporary railing or barrier.

When traffic cones or delineators are used to delineate a temporary edge of a traffic lane, the line of cones or delineators shall be considered to be the edge of the traffic lane, however, the Contractor shall not reduce the width of an existing lane to less than 3 m {10 feet} without written approval from the Engineer.

When work is not in progress on a trench or other excavation that required closure of an adjacent lane, the traffic cones or portable delineators used for the lane closure shall be placed off of and adjacent to the edge of the traveled way. The spacing of the cones or delineators shall be not more than the spacing used for the lane closure.

Suspended loads or equipment shall not be moved nor positioned over public traffic or pedestrians.

Full compensation for conforming to the provisions in this section "Public Safety," including furnishing and installing temporary railing (Type K) and temporary crash cushion modules, shall be considered as included in the contract prices paid for the various items of work involved and no additional compensation will be allowed therefor.

5-1.11 DIFFERING SITE CONDITIONS

Attention is directed to Section 5-1.116, "Differing Site Conditions," of the Standard Specifications.

During the progress of the work, if subsurface or latent conditions are encountered at the site differing materially from those indicated in the “Material Information,” log of test borings, other geotechnical data obtained by the Department’s investigation of subsurface conditions, or an examination of the conditions ground at the site, the party discovering those conditions shall

promptly notify the other party in writing of the specific differing conditions before they are disturbed above and before the affected work is performed.

The Contractor will be allowed 15 days from the notification of the Engineer's determination of whether or not an adjustment of the contract is warranted, in which to file a notice of potential claim in conformance with the provisions of Section 9-1.04, "Notice of Potential Claim," of the Standard Specifications and as specified herein; otherwise the decision of the Engineer shall be deemed to have been accepted by the Contractor as correct. The notice of potential claim shall set forth in what respects the Contractor's position differs from the Engineer's determination and provide any additional information obtained by the Contractor, including but is not limited to additional geotechnical data. The notice of potential claim shall be accompanied by the Contractor's certification that the following were made in preparation of the bid: a review of the contract, a review of the "Materials Information," a review of the log of test borings and other records of geotechnical data to the extent they were made available to bidders prior to the opening of bids, and an examination of the conditions above ground at the site. A copy of the geotechnical report will be made available for review at the Placer County Department of Public Works Office located at 3091 County Center Drive, Suite 220, Auburn, CA. Supplementary information, obtained by the Contractor subsequent to the filing of the notice of potential claim, shall be submitted to the Engineer in an expeditious manner.

In addition to the above, this contract is subject to Public Contract Code, Section 7104, and specifically Sub-section (c) that states that, in the event that a dispute arises between the public entity and the contractor whether the conditions materially differ, or involve hazardous waste, or cause a decrease or increase in the contractor's cost of, or time required for, performance of any part of the work, the contractor shall not be excused from any scheduled completion date provided for by the contract, but shall proceed with all work to be performed under the contract. The contractor shall retain any and all rights provided either by contract or by law which pertain to the resolution of disputes and protests between the contracting parties.

5-1.12 SURFACE MINING AND RECLAMATION ACT

Attention is directed to the Surface Mining and Reclamation Act of 1975, commencing in Public Resources Code, Mining and Geology, Section 2710, which establishes regulations pertinent to surface mining operations, and to California Public Contract Code Section 10295.5.

Material from mining operations furnished for this project shall only come from permitted sites in compliance with California Public Contract Code Section 10295.5.

The requirements of this section shall apply to all materials furnished for the project, except for acquisition of materials in conformance with Section 4-1.05, "Use of Materials Found on the Work," of the Standard Specifications.

5-1.13 EXCAVATION SAFETY PLAN

The Contractor’s attention is directed to requirements of the Section titled “Earthwork,” of the special provisions concerning Temporary Shoring Plan. Section 5-1.02A, "Trench Excavation Safety Plans," of the Standard Specifications is amended to read:

5-1.02A Excavation Safety Plans

• The Construction Safety Orders of the Division of Occupational Safety and Health shall apply to all excavations. For all excavations 1.5 m or more in depth, the Contractor shall submit to the Engineer a detailed plan showing the design and details of the protective systems to be provided for worker and public protection from the hazard of caving ground during excavation. The detailed plan shall include any tabulated data and any design calculations used in the preparation of the plan. Excavation shall not begin until the detailed plan has been reviewed and approved by the Engineer.

• Detailed plans of protective systems for which the Construction Safety Orders require design by a registered professional engineer shall be prepared and signed by an engineer who is registered as a Civil Engineer in the State of California, and shall include the soil classification, soil properties, soil design calculations that demonstrate adequate stability of the protective system, and any other design calculations used in the preparation of the plan.

• No plan shall allow the use of a protective system less effective than that required by the Construction Safety Orders.

• If the detailed plan includes designs of protective systems developed only from the allowable configurations and slopes, or Appendices, contained in the Construction Safety Orders, the plan shall be submitted at least 5 days before the Contractor intends to begin excavation. If the detailed plan includes designs of protective systems developed from tabulated data, or designs for which design by a registered professional engineer is required, the plan shall be submitted at least 3 weeks before the Contractor intends to begin excavation.

• Attention is directed to Section 7-1.01E, "Trench Safety."

The third paragraph of Section 19-1.02, "Preservation of Property," of the Standard Specifications is amended to read:

• In addition to the provisions in Sections 5-1.02, "Plans and Working Drawings," and 5-1.02A, "Excavation Safety Plans," detailed plans of the protective systems for excavations on or affecting railroad property will be reviewed for adequacy of protection provided for railroad facilities, property, and traffic. These plans shall be submitted at least 9 weeks before the Contractor intends to begin excavation requiring the protective systems. Approval by the Engineer of the detailed plans for the protective systems will be contingent upon the plans being satisfactory to the railroad company involved.

The Contractor shall submit a Temporary Shoring Safety System Plan to the Engineer prior to the start of the work in accordance with Section 10-1.25, “Earthwork,” of these special provisions. The Contractors attention is directed to the requirements specified in Section 10-1.25, “Earthwork,” of these special provisions.

Full compensation for conforming to the provisions of this section, not otherwise provided for in other sections of these special provisions, shall be considered as included in prices paid for the various contract items of work involved and no additional compensation will be allowed therefor.

5-1.14 REMOVAL OF ASBESTOS AND HAZARDOUS SUBSTANCES:

When the presence of asbestos or hazardous substances are not shown on the plans or indicated in the specifications and the Contractor encounters materials which the Contractor reasonably believes to be asbestos or a hazardous substance as defined in Section 25914.1 of the Health and Safety Code, and the asbestos or hazardous substance has not been rendered harmless, the Contractor may continue work in unaffected areas reasonably believed to be safe. The Contractor shall immediately cease work in the affected area and report the condition to the Engineer in writing.

In conformance with Section 25914.1 of the Health and Safety Code, removal of asbestos or hazardous substances including exploratory work to identify and determine the extent of the asbestos or hazardous substance will be performed by separate contract.

If delay of work in the area delays the current controlling operation, the delay will be considered a right of way delay and the Contractor will be compensated for the delay in conformance with the provisions in Section 8-1.09, "Right of Way Delays," of the Standard Specifications.

In addition to the above, this contract is subject to Public Contract Code, Section 7104, and specifically Sub-section (a) that states that, the contractor shall promptly, and before the following conditions are disturbed, notify the public entity, in writing, of any material that the contractor believes may be material that is hazardous waste, as defined in Section 25117 of the Health and Safety Code, that is required to be removed to a Class I, Class II, or Class III disposal site in accordance with provisions of existing law.

5-1.15 SUBCONTRACTORS AND DBE RECORDS

The Contractor shall maintain records showing the name and business address of each first-tier subcontractor. The records shall also show the name and business address of every DBE subcontractor, DBE vendor of materials and DBE trucking company, regardless of tier. The records shall show the date of payment and the total dollar figure paid to all of these firms. DBE prime contractors shall also show the date of work performed by their own forces along with the corresponding dollar value of the work.

Upon completion of the contract, a summary of these records shall be prepared on Form CEM-2402 (F) and certified correct by the Contractor or the Contractor's authorized representative, and shall be furnished to the Engineer. The form shall be furnished to the Engineer within 90 days from the date of contract acceptance. $10,000 will be withheld from payment until the Form CEM-2402 (F) is submitted. The amount will be returned to the Contractor when a satisfactory Form CEM-2402 (F) is submitted.

Prior to the fifteenth of each month, the Contractor shall submit documentation to the Engineer showing the amount paid to DBE trucking companies. This monthly documentation shall indicate the portion of the revenue paid to DBE trucking companies. The Contractor shall also obtain and submit documentation to the Engineer showing the amount paid by DBE trucking companies to all firms, including owner-operators, for the leasing of trucks. The DBE who leases trucks from a non-DBE is entitled to credit only for the fee or commission it receives as a result of the lease arrangement.

The Contractor shall also obtain and submit documentation to the Engineer showing the truck number, owner's name, California Highway Patrol CA number, and if applicable, the DBE certification number of the owner of the truck for all trucks used during that month. This documentation shall be submitted on Form CEM-2404 (F).

5-1.16 PERFORMANCE OF DBE SUBCONTRACTORS AND SUPPLIERS

The DBEs listed by the Contractor in response to the requirements in, “Submission of DBE Information,” of the special provisions, and Section 3, “Award And Execution Of Contract,” of these special provisions, which are determined by the Department to be certified DBEs, shall perform the work and supply the materials for which they are listed unless the Contractor has received prior written authorization to perform the work with other forces or to obtain the materials from other sources.

Authorization to utilize other forces or sources of materials may be requested for the following reasons:

(1) The listed DBE, after having had a reasonable opportunity to do so, fails or refuses to execute a written contract, when such written contract, based upon the general terms, conditions, plans and specifications for the project, or on the terms of such subcontractor’s or supplier’s written bid, is presented by the Contractor.

(2) The listed DBE becomes bankrupt or insolvent.

(3) The listed DBE fails or refuses to perform his subcontract or furnish the listed materials.

(4) The Contractor stipulated that a bond was a condition of executing a subcontract and the listed DBE subcontractor fails or refuses to meet the bond requirements of the Contractor.

(5) The work performed by the listed subcontractor is substantially unsatisfactory and is not in substantial accordance with the plans and specifications, or the subcontractor is substantially delaying or disrupting the progress of the work.

(6) It would be in the best interest of the State.

The Contractor shall not be entitled to any payment for such work or material unless it is performed or supplied by the listed DBE or by other forces (including those of the Contractor) pursuant to prior written authorization of the Engineer.

5-1.17 BUY AMERICA REQUIREMENTS:

Attention is directed to the "Buy America" requirements of the Surface Transportation Assistance Act of 1982 (Section 165) and the Intermodal Surface Transportation Efficiency Act

of 1991 (ISTEA) Sections 1041(a) and 1048(a), and the regulations adopted pursuant thereto. In conformance with the law and regulations, all manufacturing processes for steel and iron materials furnished for incorporation into the work on this project shall occur in the United States; with the exception that pig iron and processed, pelletized and reduced iron ore manufactured outside of the United States may be used in the domestic manufacturing process for such steel and iron materials. The application of coatings, such as epoxy coating, galvanizing, painting, and other coatings that protect or enhance the value of steel or iron materials shall be considered a manufacturing process subject to the "Buy America" requirements.

A Certificate of Compliance conforming to the provisions in Section 6-1.07, "Certificates of Compliance," of the Standard Specifications shall be furnished for steel and iron materials. The certificates, in addition to certifying that the materials comply with the specifications, shall specifically certify that all manufacturing processes for the materials occurred in the United States, except for the above exceptions.

The requirements imposed by the law and regulations do not prevent a minimal use of foreign steel and iron materials if the total combined cost of the materials used does not exceed one-tenth of one percent (0.1 percent) of the total contract cost or $2500, whichever is greater. The Contractor shall furnish the Engineer acceptable documentation of the quantity and value of the foreign steel and iron prior to incorporating the materials into the work.

5-1.18 DBE CERTIFICATION STATUS

If a DBE subcontractor is decertified during the life of the project, the decertified subcontractor shall notify the Contractor in writing with the date of decertification. If a subcontractor becomes a certified DBE during the life of the project, the subcontractor shall notify the Contractor in writing with the date of certification. The Contractor shall furnish the written documentation to the Engineer.

Upon completion of the contract, Form CEM-2403 (F) indicating the DBE's existing certification status shall be signed and certified correct by the Contractor. The certified form shall be furnished to the Engineer within 90 days from the date of contract acceptance.

5-1.19 YEAR 2000 COMPLIANCE

This contract is subject to Year 2000 Compliance for automated devices in the State of California.

Year 2000 compliance for automated devices in the State of California is achieved when embedded functions have or create no logical or mathematical inconsistencies when dealing with dates prior to and beyond 1999. The year 2000 is recognized and processed as a leap year. The product shall operate accurately in the manner in which the product was intended for date operation without requiring manual intervention.

The Contractor shall provide the Engineer a Certificate of Compliance from the manufacturer in conformance with the provisions in Section 6-1.07, "Certificates of Compliance," of the Standard Specifications for all automated devices furnished for the project.

5-1.20 SOUND CONTROL REQUIREMENTS

Sound control shall conform to the provisions in Section 7-1.01I, "Sound Control Requirements," of the Standard Specifications, the provisions in the attached Mitigation Monitoring and Reporting Program and these special provisions.

The noise level from the Contractor's operations, between the hours of 9:00 p.m. and 6:00 a.m., shall not exceed 86 dBa at a distance of 15 m {50 feet}. This requirement shall not relieve the Contractor from responsibility for complying with local ordinances regulating noise level.

The noise level requirement shall apply to the equipment on the job or related to the job, including but not limited to trucks, transit mixers or transient equipment that may or may not be owned by the Contractor. The use of loud sound signals shall be avoided in favor of light warnings except those required by safety laws for the protection of personnel.

Full compensation for conforming to the requirements of this section shall be considered as included in the prices paid for the various contract items of work involved and no additional compensation will be allowed therefor.

5-1.21 SUBCONTRACTING

Attention is directed to the provisions in Section 8-1.01, "Subcontracting," of the Standard Specifications, and Section 2, "Proposal Requirements and Conditions," and Section 3, "Award and Execution of Contract," of these special provisions.

All Subcontractors doing work shall possess an appropriate valid California Contractor's License for the type of work the Subcontractor will perform at the time of the bid submittal, and the license shall remain in effect throughout the duration of employment on the job.

All applicable license designations and number for Subcontractors doing work in excess of $5,000.00 shall be included on the LIST OF SUBCONTRACTORS within the proposal.

Pursuant to the provisions of Section 1777.1 of the Labor Code, the Labor Commissioner publishes and distributes a list of contractors ineligible to perform work as a subcontractor on a public works project. This list of debarred contractors is available from the Department of Industrial Relations web site at:

http://www.dir.ca.gov/DLSE/Debar.htm

The provisions in the third paragraph of Section 8-1.01, "Subcontracting," of the Standard Specifications, that the contractor shall perform with the Contractor's own organization contract work amounting to not less than 50 percent of the original contract price, is not changed by the Federal Aid requirement specified under "Required Contract Provisions Federal-Aid Construction Contracts" in Section 14 of these special provisions that the Contractor perform not less than 30 percent of the original contract work with the Contractor's won organization.

Each subcontract and any lower tier subcontract that may in turn be made shall include the "Required Contract Provisions Federal-Aid Construction Contracts" in Section 14 of these special provisions. This requirement shall be enforced as follows:

A. Noncompliance shall be corrected. Payment for subcontracted work involved will be withheld from progress payments due, or to become due, until correction is made. Failure to comply may result in termination of the contract.

In conformance with the Federal DBE regulations Sections 26.53(f)(1) and 26.53(f)(2) Part 26, Title 49 CFR:

A. The Contractor shall not terminate for convenience a DBE subcontractor listed in response to Section 2-1.02B, "Submission of DBE Information," and then perform that work with its own forces, or those of an affiliate without the written consent of the Department, and
B. If a DBE subcontractor is terminated or fails to complete its work for any reason, the Contractor will be required to make good faith efforts to substitute another DBE subcontractor for the original DBE subcontractor, to the extent needed to meet the contract goal.

The requirement in Section 2-1.03, "Disadvantaged Business Enterprise (DBE)," of these special provisions that DBEs must be certified on the date bids are opened does not apply to DBE substitutions after award of the contract.

5-1.22 PROMPT PROGRESS PAYMENT TO SUBCONTRACTORS

Attention is directed to the provisions in Sections 10262 and 10262.5 of the Public Contract Code concerning prompt payment to subcontractors.

5-1.23 RESPONSIBILITY TO OTHER ENTITIES

The Contractor shall be responsible for any liability imposed by law and for injuries to or death of any person including, but not limited to, workers and the public or damage to property, and shall indemnify and save harmless the County of Placer, the State of California, Department of Transportation, the State of California Department of Fish and Game, the State of California Water Quality Control Board, and any county, city or district, its officers and employees connected with the work, within the limits of the County right of way, or limits of which county, city or district the work is being performed, including the limits of jurisdictions of the State of California Water Quality Control Board or the State of California Department of Fish and Game, all in the same manner and to the same extent conforming to the provisions in Section 7-1.12, "Indemnification and Insurance," of the Standard Specifications, for the protection of the County of Placer, the State of California Department of Transportation, the State of California Water Quality Control Board, the State of California Department of Fish and Game and all their officers and employees thereof connected with the work.

5-1.24 RECORDS

The Contractor shall maintain cost accounting records for the contract pertaining to, and in such a manner as to provide a clear distinction between, the following six categories of costs of work during the life of the contract:

A. Direct costs of contract item work.
B. Direct costs of changes in character in conformance with Section 4-1.03C, "Changes in Character of Work," of the Standard Specifications.
C. Direct costs of extra work in conformance with Section 4-1.03D, "Extra Work," of the Standard Specifications.
D. Direct costs of work not required by the contract and performed for others.
E. Direct costs of work performed under a notice of potential claim in conformance with the provisions in Section 9-1.04, "Notice of Potential Claim," of the Standard Specifications.
F. Indirect costs of overhead.

Cost accounting records shall include the information specified for daily extra work reports in Section 9-1.03C, "Records," of the Standard Specifications. The requirements for furnishing the Engineer completed daily extra work reports shall only apply to work paid for on a force account basis.

The cost accounting records for the contract shall be maintained separately from other contracts, during the life of the contract, and for a period of not less than 3 years after the date of acceptance of the contract. If the Contractor intends to file claims against the Department, the Contractor shall keep the cost accounting records specified above until complete resolution of all claims has been reached.

Full compensation for conforming to the provisions of this section, not otherwise provided for, shall be considered as included in prices paid for the various contract items of work involved and no additional compensation will be allowed therefor.

5-1.25 AREAS FOR CONTRACTOR'S USE

Attention is directed to the provisions in Section 7-1.19, "Rights in Land and Improvements," of the Standard Specifications, the provisions in the attached Mitigation Monitoring and Reporting Program and these special provisions.

The project area (contract limits) shall be used only for purposes that are necessary to perform the required work. The Contractor shall not occupy the right of way, or allow others to occupy the right of way, for purposes which are not necessary to perform the required work.

No area is available within the contract limits for the exclusive use of the Contractor. The Contractor shall secure, at the Contractor's own expense, areas required for plant sites, storage of equipment or materials, or for other purposes.

However, temporary storage of equipment and materials on County property may be arranged with the Engineer, subject to the prior demands of County maintenance forces and to other contract requirements. Use of the Contractor's work areas and other County-owned

property shall be at the Contractor's own risk, and the County shall not be held liable for damage to or loss of materials or equipment located within such areas.

The Contractor shall obtain encroachment permits prior to occupying County-owned parcels outside the contract limits. The required encroachment permits may be obtained from the Placer County Department of Public Works, 11434 “B” Avenue, Auburn, CA 95603.

Residence trailers will not be allowed within the project sites.

The Contractor shall remove equipment, materials, and rubbish from the work areas and other County-owned property which the Contractor occupies. The Contractor shall leave the areas in a presentable condition in conformance with the provisions in Section 4-1.02, "Final Cleaning Up," of the Standard Specifications.

The Contractor shall take all necessary precautions to protect the staging area from chemical contamination due to oil or fuel spills or any other contaminants. If contamination occurs, the site shall be decontaminated to the satisfaction of the Engineer prior to further improvement to the contaminated area or to further construction activities in general, whichever is applicable as determined by the Engineer. Methods of decontamination shall include any method deemed appropriate by the Engineer including removal and deposition of the contaminated soils in conformance with CEQA and regulatory agency requirements.

Full compensation for conforming to the provisions of this section, including furnishing all labor, materials, grading, tools, equipment and incidentals, and for doing all work associated with this section shall be considered as included in prices paid for the various contract items of work involved and no additional compensation will be allowed therefor.

5-1.26 PAYMENTS

Attention is directed to Sections 9-1.06, "Partial Payments," and 9-1.07, "Payment After Acceptance," of the Standard Specifications and these special provisions.

For the purpose of making partial payments pursuant to Section 9-1.06, "Partial Payments," of the Standard Specifications, the amount set forth for the contract items of work hereinafter listed shall be deemed to be the maximum value of the contract item of work, which will be recognized for progress payment purposes:

A. Clearing and Grubbing $ 20,000.00

After acceptance of the contract pursuant to the provisions in Section 7-1.17, "Acceptance of Contract," of the Standard Specifications, the amount, if any, payable for a contract item of work in excess of the maximum value for progress payment purposes hereinabove listed for the item, will be included for payment in the first estimate made after acceptance of the contract.

No partial payment will be made for any materials on hand which are furnished but not incorporated in the work.

5-1.27 WARRANTY

Should any failure of the work occur within a period of one year from the acceptance of the project by the Board of Supervisors due to faulty materials, poor workmanship, or defective equipment, the Contractor shall promptly make the needed repairs at his expense in accordance with the special provisions and to the satisfaction of the Engineer.

Security for this warranty shall be in the form of the Performance Bond, required elsewhere in these specifications, which shall remain in effect for a period of one (1) year after acceptance of the project by the Placer County Board of Supervisors. The Performance Bond will not be reduced to an amount less than the bid amount of the project prior to the expiration of the one (1) year warranty period.

The County is hereby authorized to make such repairs, or to have such repairs made by others, if the Contractor fails to make such repairs, or to have such repairs made by others, if the Contractor fails to make or undertake with due diligence the aforesaid repairs within ten (10) days after receiving written notice of such failure or within a time specified in the notice if different; provided, however, that in case of an emergency where, in the opinion of the Engineer, that delay would cause serious loss or damages, or a serious hazard to the public, and a reasonable attempt has been made to notify the Contractor, the repairs may be made on lights, signs, and barricades erected, without prior notice to the Contractor; and the Contractor's sureties shall be liable for the entire cost thereof.

5-1.28 AIR POLLUTION CONTROL

Air pollution control shall conform to the provisions of Section 7-1.01F, "Air Pollution Control," of the Standard Specifications, these special provisions and the provisions of the attached Mitigation Monitoring and Reporting Program.

No burning of materials to be disposed of will be permitted for this project.

The Contractor shall contact the Placer County Air Pollution Control District engineer prior to the start of construction to determine if any of the equipment to be used on the construction site requires a stationary source or Authority to Construct Permit.

Full compensation for conforming to the provisions of this section, not otherwise provided for, shall be considered as included in prices paid for the various contract items of work involved and no additional compensation will be allowed therefor.

5-1.29 PROJECT APPEARANCE

The Contractor shall maintain a neat appearance to the work and shall cleanup all tracked material and debris on a daily basis.

In areas visible to the public, the following shall apply:

A. When practicable, broken concrete and debris developed during clearing and grubbing shall be disposed of concurrently with its removal. If stockpiling is necessary, the material shall be removed or disposed of weekly.

B. Trash bins shall be furnished for debris from structure construction. Debris shall be placed in trash bins daily. Forms or falsework that are to be re-used shall be stacked neatly concurrently with their removal. Forms and falsework that are not to be re-used shall be disposed of concurrently with their removal.

Full compensation for conforming to the provisions in this section, not otherwise provided for, shall be considered as included in prices paid for the various contract items of work involved and no additional compensation will be allowed therefor.

5-1.30 ALTERNATIVE WATER SUPPLY

In the case that the Contractor's operations damage a water delivery system, the Contractor shall provide an alternate water supply available to all residences, businesses, and properties affected by such damage for the duration of the water delivery system downtime.

Full compensation for conforming to the provisions of this section, not otherwise provided for in other sections of these Special Provisions, shall be considered as included in prices paid for the various contract items of work involved in the damage and no additional compensation will be allowed therefore.

5-1.31 INSURANCE

Contractor shall file with County a certificate(s) of Insurance, in companies acceptable to County, with a Best's Rating of no less than A:VII showing, in a form acceptable to County.

Throughout the period of this agreement, the Contractor shall provide the following minimum insurance coverage as listed below. Contractor shall file with County a certificate(s) of Insurance, in a form acceptable to County, at the time of execution of this agreement. The insurance company must be acceptable to County, with a Best's Rating of no less than A:VII. Documentation of such rating acceptable to the County shall be provided at the time Insurance Certificates are submitted.

In the event any of the following policies are canceled prior to the completion of the project and the Contractor does not furnish a new certificate(s) of insurance prior to cancellation, the County may obtain the required insurance and deduct the premium(s) from Contract monies due the Contractor.

Worker's Compensation and Employers Liability Insurance:

The Contractor shall maintain adequate Workers' Compensation Insurance under the Laws of the State of California.

Contractor shall fully comply with the provisions of Section 3700 of the Labor Code, which requires every employer to be insured against liability for Workers' Compensation or to undertake self-insurance in accordance with the provisions of that Code, before commencing the performance of the work.

By the Contractor's signature hereunder, Contractor certifies that he/she is aware of the provisions of Section 3700 of the California Labor Code which require every employer to be

insured against liability for Workers' Compensation or to undertake self-insurance in accordance with the provisions of that Code, and he/she will comply with such provisions before commencing the performance of this Contract.

If such insurance is underwritten by any agency other than State Compensation Fund, such agency shall be a company authorized to do business in the State of California.

The Contractor shall require all Subcontractors to maintain adequate Workers' Compensation Insurance. Certificates of such Workers' Compensation shall be filed forthwith with the County upon demand.

Worker's Compensation Insurance shall be provided as required by any applicable law or regulation. Employer's liability insurance shall be provided in amounts not less than the following:

- ONE MILLION DOLLARS ($1,000,000) each accident for bodily injury by accident
- ONE MILLION DOLLARS($1,000,000) policy limit for bodily injury by disease
- ONE MILLION DOLLARS ($1,000,000) each employee for bodily injury by disease

If there is an exposure of injury to Contractor's employees under the U.S. Longshoremen's and Harbor Worker's Compensation Act, the Jones Act, or under laws, regulations, or statutes applicable to maritime employees, coverage shall be included for such injuries or claims.

Each Worker's Compensation policy shall be endorsed with the following specific language:

Cancellation Notice: "This policy shall not be canceled or materially changed without first giving thirty (30) days prior written notice to the County of Placer."

Contractor shall require all Subcontractors to maintain adequate Worker's Compensation insurance. Certificates of Workers' Compensation shall be filed forthwith with the County upon demand.

General Liability Insurance:

Comprehensive General Liability or Commercial General Liability insurance covering all operations by or on behalf of Contractor, providing insurance for bodily injury liability and property damage liability for the limits of liability indicated below and including coverage for:

(1) Premises and operations;
(2) Products and completed operations;
(3) Contractual liability insuring the obligations assumed by Contractor in this Agreement;
(4) Broad form property damage (including completed operations);
(5) Explosion, collapse, and underground hazards;
(6) Personal injury liability; and

Except with respect to bodily injury and property damage included within the products and completed operations hazards, the aggregate limits, where applicable, shall apply separately to Contractor's work under the Contract.

One of the following forms is required:

(1) Comprehensive General Liability;
(2) Commercial General Liability (Occurrence); or
(3) Commercial General Liability (Claims Made).

If Contractor carries a Comprehensive General Liability policy, the limits of liability shall not be less than a Combined Single Limit for Bodily Injury, Property Damage, and Personal Injury Liability of:

- TWO MILLION DOLLARS ($2,000,000) each occurrence
- TWO MILLION DOLLARS ($2,000,000) aggregate

If Contractor carries a Commercial General Liability (Occurrence) policy:

(1) The limits of liability shall not be less than:

- TWO MILLION DOLLARS ($2,000,000) each occurrence (combined single limit for bodily injury and property damage)
- TWO MILLION DOLLARS ($2,000,000) for Personal Injury Liability
- TWO MILLION DOLLARS ($2,000,000) for Products-Completed Operations
- TWO MILLION DOLLARS ($2,000,000) General Aggregate

(2) If the policy does not have an endorsement providing that the General Aggregate Limit applies separately, or if defense costs are included in the aggregate limits, then the required aggregate limits shall be three million dollars ($3,000,000).

Special Claims Made Policy Form Provisions:

Contractor shall not provide a Commercial General Liability (Claims Made) policy without the express prior written consent of County, which consent, if given, shall be subject to the following conditions:

(1) The limits of liability shall not be less than:

- TWO MILLION ($2,000,000) each occurrence (combined single limit for bodily injury and property damage)
- TWO MILLION DOLLARS ($2,000,000) for Personal Injury Liability
- TWO MILLION DOLLARS ($2,000,000) aggregate for Products Completed Operations
- TWO MILLION DOLLARS ($2,000,000) General Aggregate

(2) The insurance coverage provided by Contractor shall contain language providing coverage up to six (6) months following the completion of the Contract in order to provide insurance coverage for the hold harmless provisions herein if the policy is a Claims Made Policy.

Conformity of Coverage's:

If more than one policy is used to meet the required coverage's, such as a separate umbrella policy, such policies shall be consistent with all other applicable policies used to meet these minimum requirements. For example, all policies shall be Occurrence Liability policies, or all shall be Claims Made Liability policies if approved by the County as noted above. In no case shall the types of coverages be different.

Additional Requirements:

Premium Payments: The insurance companies shall have no recourse against the County and Funding Agencies, its officers and employees or any of them for payment of any premiums or assessments under any policy issued by a mutual insurance company.

Policy Deductibles: The Contractor shall be responsible for all deductibles in all of Contractor's insurance policies. The amount of deductibles for an insurance coverage required herein should be reasonable and subject to the County's approval.

Contractor Obligations: Contractor's indemnity and other obligations shall not be limited by the foregoing insurance requirements and shall survive the expiration of this agreement.

Material Breach: Failure of the Contractor to maintain the insurance required by these special provisions, or to comply with any of the requirements of these special provisions, shall constitute a material breach of the entire agreement.

Endorsements:

Each Comprehensive or Commercial General Liability policy shall be endorsed with the following specific language:

> "The County of Placer, and additional insureds (including, State of California, California Department of Transportation, Federal Highway Administration, California Regional Water Quality Control Board, California Department of Fish and Game), and their officers, agents, outside parties hired to inspect and/or design the work, employees, and volunteers are to be covered as insured for all liability arising out of the operations by or on behalf of the named insured in the performance of this Agreement."

> "The insurance provided by the Contractor, including any excess liability or umbrella form coverage, is primary coverage to the County of Placer and additional insureds, with respect to any insurance or self-insurance programs maintained by the County of Placer and additional insureds, and no insurance held or owned by the County of Placer and additional insureds shall be called upon to contribute to a loss."

"This policy shall not be canceled or materially changed without first giving thirty (30) days prior written notice to the County of Placer."

Automobile Liability Insurance:

Contractor shall provide Automobile Liability insurance covering bodily injury and property damage in an amount no less than TWO MILLION DOLLARS ($2,000,000) combined single limit for each occurrence.

Covered vehicles shall include owned, non-owned, and hired automobiles/trucks.

5-1.32 COST REDUCTION INCENTIVE

Attention is directed to Section 5-1.14, "Cost Reduction Incentive," of the Standard Specifications.

Prior to preparing a written cost reduction proposal, the Contractor shall request a meeting with the Engineer to discuss the proposal in concept. Items of discussion will also include permit issues, impact on other projects, impact on the project schedule, peer reviews, overall merit of the proposal, and review times required by the Department and other agencies.

If a cost reduction proposal submitted by the Contractor, and subsequently approved by the Engineer, provides for a reduction in contract time, 50 percent of that contract time reduction shall be credited to the State by reducing the contract working days, not including plant establishment. Attention is directed to "Beginning of Work, Time of Completion and Liquidated Damages" of these special provisions regarding the working days.

If a cost reduction proposal submitted by the Contractor, and subsequently approved by the Engineer, provides for a reduction in traffic congestion or avoids traffic congestion during construction, 60 percent of the estimated net savings in construction costs attributable to the cost reduction proposal will be paid to the Contractor. In addition to the requirements in Section 5-1.14, "Cost Reduction Incentive," of the Standard Specifications, the Contractor shall provide detailed comparisons of the traffic handling between the existing contract and the proposed change, and estimates of the traffic volumes and congestion.

5-1.33 PERMITS

Attention is directed to the provisions in Section 7-1.04, “Permits and Licenses,” of the Standard Specifications and these special provisions.

Full compensation for conforming to the provisions in this Section and to the requirements in the permit, not otherwise provided for in other sections of these special provisions, shall be considered as included in the prices paid for the various contract items of work involved and no additional compensation will be allowed therefor.

5-1.34 RELATIONS WITH CALIFORNIA DEPARTMENT OF FISH AND GAME

A portion of this project is located within the jurisdiction of the California Department of Fish and Game. An agreement regarding work that will alter or impact a streambed or lakebed has been entered into by the County and the Department of Fish and Game. The Contractor shall be fully informed of the requirements of this agreement as well as rules, regulations, and conditions that may govern the Contractor's operations in these areas and shall conduct the work accordingly.

The Contractor and the necessary subcontractors on this project (as determined by the Engineer) shall be required to sign the Notice and Verification Agreement Regarding Proposed Stream or Lake Alteration from the California Department of Fish and Game within 10 days of the Notice to Proceed and prior to any work affecting the stream channels on this project.

Copies of the agreement may be obtained at the Placer County Department of Public Works Office located at 3091 County Center Drive, Suite 220, Auburn, CA 95603, Telephone (530) 745-7500 or on line at:

http://www.placer.ca.gov/Works/Projects/AuburnFolsomHome.aspx

It is unlawful for any person to divert, obstruct or change the natural flow of the bed, channel or bank of a stream, river or lake without first notifying the Department of Fish and Game, unless the project or activity is noticed and constructed in conformance with conditions imposed under Fish and Game Code Section 1601.

Attention is directed to Sections 7-1.01, "Laws to be Observed," 7-1.01G, "Water Pollution," and 7-1.12, "Indemnification and Insurance," of the Standard Specifications, and the requirements specified in the special provisions.

Modifications to the agreement between the County and the Department of Fish and Game, which are proposed by the Contractor shall be submitted in writing to the Engineer for transmittal to the Department of Fish and Game for their consideration.

When the Contractor is notified by the Engineer that a modification to the agreement is under consideration, no work shall be performed which is inconsistent with the original agreement or proposed modification until the County and Department of Fish and Game take action on the proposed modifications. Compensation for delay will be determined in conformance with the provisions in Section 8-1.09, “Right-of-Way Delay” of the Standard Specifications.

No work will be allowed that is inconsistent with existing requirements of either the agreement or the plans without receiving prior approval from the Department of Fish and Game and the County. The County will not pay for any delays due to processing and obtaining approvals for modifications proposed by the Contractor.

Modifications to any agreement between the County and the Department of Fish and Game will be fully binding on the Contractor.

The provisions of this section shall be made a part of every subcontract executed pursuant to this contract.

Full compensation for conforming to the provisions in this Section and to the requirements in this agreement shall be considered as included in the contract prices paid for the items of work involved and no additional compensation will be allowed therefor.

5-1.35 RELATIONS WITH CALIFORNIA REGIONAL WATER QUALITY CONTROL BOARD

Attention is directed to the "Water Pollution Control (Storm Water Pollution Prevention Plan)," of these special provisions. The location of the project is within an area controlled by the Regional Water Quality Control Board. Regional Water Quality Control Board Order No. ??Fill-in?? herein after referred to as the "Permit," has been issued covering work to be performed under this contract. The Contractor shall be fully informed of rules, regulations, and conditions that may govern the Contractor's operations in the areas and shall conduct the work accordingly.

Copies of the agreement may be obtained at the Placer County Department of Public Works Office located at 3091 County Center Drive, Suite 220, Auburn, CA 95603, Telephone (530) 745-7500 or on line at:
http://www.placer.ca.gov/Works/Projects/AuburnFolsomHome.aspx

A copy of the Permit will be issued to the Contractor prior to beginning construction and shall be kept on the construction site any time the work is being performed.

Any change proposed by the Contractor to the conditions listed in the Permit shall be submitted by the Contractor to the Engineer for transmittal to the California Regional Water Quality Board for their approval. Changes shall not be implemented until approved in writing by the California Regional Water Quality Board. Any lost working days due to Contractor proposed modifications to the California Regional Water Quality Board Permit shall be charged against the Contractor's allowable working days.

No work will be allowed that is inconsistent with existing requirements of either the Permit or the plans without receiving prior approval from the California Regional Water Quality Control Board and the County. The County will not pay for any delays due to processing and obtaining approvals for modifications proposed by the Contractor.

Attention is directed to Section 7-1.11, "Preservation of Property," and Section 7-1.12, "Indemnification and Insurance," of the Standard Specifications, and the requirements specified in the special provisions.

Attention is directed to Section 8-1.06, "Time of Completion," of the Standard Specifications. Days when the Contractor's operations are restricted by the requirements of this section shall not be considered to be nonworking days whether or not the controlling operation is delayed.

The provisions of this section shall be made a part of every subcontract executed pursuant to this contract.

Full compensation for conforming to the provisions in this Section and to the requirements in this Permit shall be considered as included in the contract prices paid for the items of work involved and no additional compensation will be allowed therefor.

5-1.36 RELATIONS WITH ARMY CORPS OF ENGINEERS

A portion of this project is located within the jurisdiction of the Army Corps of Engineers. An agreement regarding work that may alter or impact wetlands and waters of the United States has been entered into by the County and the Army Corps of Engineers. The Contractor shall be fully informed of the requirements of this agreement as well as rules, regulations, and conditions that may govern the Contractor's operations in these areas and shall conduct the work accordingly.

Copies of the agreement may be obtained at the Placer County Department of Public Works Office located at 3091 County Center Drive, Suite 220, Auburn, CA 95603, Telephone (530) 745-7500 or on line at:
http://www.placer.ca.gov/Works/Projects/AuburnFolsomHome.aspx

Attention is directed to Sections 7-1.01, "Laws to be Observed," 7-1.01G, "Water Pollution," and 7-1.12, "Indemnification and Insurance," of the Standard Specifications, and the requirements specified in the special provisions.

Modifications to the agreement between the County and the Army Corps of Engineers, which are proposed by the Contractor, shall be submitted in writing to the Engineer for transmittal to the Army Corps of Engineers for their consideration.

When the Contractor is notified by the Engineer that a modification to the agreement is under consideration, no work shall be performed which is inconsistent with the original agreement or proposed modification until the County and Army Corps of Engineers take action on the proposed modifications. Any lost working days due to Contractor proposed modifications to the Army Corps of Engineers agreement shall be charged against the Contractor's allowable calendar days. The Contractor shall not be compensated for any delays related to Contractor proposed agreement modifications.

No work will be allowed that is inconsistent with existing requirements of either the agreement or the plans without receiving prior approval from the Army Corps of Engineers and the county. The County will not pay for any delays due to processing and obtaining approvals for modifications proposed by the Contractor.

Modifications to any agreement between the County and the Army Corps of Engineers will be fully binding on the Contractor.

The provisions of this Section shall be made a part of every subcontract executed pursuant to this contract.

Full compensation for conforming to the provisions in this Section and to the requirements in this agreement shall be considered as included in the contract prices paid for the items of work involved and no additional compensation will be allowed therefor.

5-1.37 TESTING

Testing of materials and work shall conform to the provisions in Section 6-3, "Testing," of the Standard Specifications and these special provisions.

Whenever the provisions of Section 6-3.01, "General," of the Standard Specifications refer to tests or testing, it shall mean tests to assure the quality and to determine the acceptability of the materials and work.

The Engineer will deduct the costs for testing of materials and work found to be unacceptable, as determined by the tests performed by the Department, and the costs for testing of material sources identified by the Contractor which are not used for the work, from moneys due or to become due to the Contractor. The amount deducted will be determined by the Engineer.

5-1.38 ENVIRONMENTALLY SENSITIVE AREA

Attention is directed to the designated Environmentally Sensitive Areas (ESA) shown on the plans. The exact location of the boundaries of ESA will be determined by the Engineer and shall be clearly delineated by the placement of temporary fence (Type ESA) as specified in these special provisions.

Vehicle access, storage or transport of material or equipment, or other project related activities are prohibited within the boundaries of ESAs.

An (ESA) shall consist of an area within and near the limits of construction where access is prohibited or limited for the preservation of archeological site or existing vegetation, or protection of biological habitat as shown on the plans. The Engineer will determine the exact location of the boundaries of the ESA. No work shall be conducted within the ESA.

Attention is directed to Section 7-1.01, “Laws to be Observed,” and Section 7-1.04, “Permits and Licenses,” of the Standard Specifications regarding State and Federal regulations, permits, or agreements with pertain to an ESA.

The Contractor shall repair or perform work to mitigate damage or impacts to ESAs caused by the Contractor’s operations at the Contractor’s expense. If the Engineer determines repairs or mitigation work will be performed by others, or if mitigation fees are assessed the Department deductions from moneys due or to become due the Contractor will be made for the repair or mitigation costs.

Attention is directed to trees designed on the plans to be preserved that may be impacted by contractors operations and to “Temporary Fence (Type ESA)” of these special provisions. The Contractor shall construct temporary fence (Type ESA) at or outside the dripline of the

designated trees unless work is required under the canopy. No vehicles, construction equipment, mobile offices, or material shall be parked, stored, or located within the dripline of trees designed to be preserved except with written approval from the Engineer.

Full compensation for conforming to the provisions in this Section shall be considered as included in the contract price paid per linear foot of "Temporary Fencing (Type ESA)" and no additional payment will be allowed.

5-1.39 DISCOVERY OF CULTURAL RESOURCES

The Contractor shall immediately provide an oral notification to the Engineer of the discovery of any and all antiquities or other objects of cultural, historic, or scientific interest. Objects under consideration include, but are not limited to, historic or prehistoric ruins, human remains, funerary objects, and artifacts discovered as the result of activities under this contract and right of entry. The Contractor shall immediately cease activity in the area of discovery, make a reasonable effort to protect such discovery, and wait for written approval from the Engineer before resuming the activity. Protective and mitigative measures specified by the Engineer shall be the responsibility of the County.

5-1.40 PREVAILING WAGE

Attention is directed to Section 7-1.01A(2), "Prevailing Wage," of the Standard Specifications.

The general prevailing wage rates determined by the Director of Industrial Relations, for the county, are available at the Department of Public Works, 3091 County Center Drive, Suite 220, Auburn, CA 95603 [fax (530) 886-3540]. These wage rates are not included in the Proposal and Contract for the project. Changes, if any, to the general prevailing wage rates will be available at the same location.

5-1.41 PLANS AND WORKING DRAWINGS

When the specifications require working drawings to be submitted to the Division of Structure Design, the drawings shall be submitted to the Engineer, unless otherwise specifically noted.

5-1.42 RELIEF FROM MAINTENANCE AND RESPONSIBILITY

The Contractor may be relieved of the duty of maintenance and protection for those items not directly connected with plant establishment work in conformance with the provisions in Section 7-1.15, "Relief From Maintenance and Responsibility," of the Standard Specifications. Water pollution control, maintain existing planted areas, maintain existing irrigation facilities, transplant trees, and transplant palm trees shall not be relieved of maintenance.

5-1.43 PERMITS

Attention is directed to the provisions in Sections 7-1.04, "Permits and Licenses," of the Standard Specifications and these special provisions.

Building Permit (Electrical)

The Contractor shall apply and arrange for the inspection of electrical service connections, on the user side, by the Building Department of the County of Placer, located at 3091 County Center Drive, Suite 220, Auburn, CA 95603, telephone (530) 889-7487. The Contractor shall give sufficient advance notice to the Building Department to allow for the inspection to be completed before the service connections, required by the provisions in Section 86-2.11, "Service," of the Standard Specifications, will be completed by the electric utility. The permit will be issued free of charge.

Full compensation for conforming to the provisions in this Section and to the requirements in the permit, not otherwise provided for in other sections of these special provisions, shall be considered as included in the contract prices paid for the items of work involved and no additional compensation will be allowed therefore.

SECTION 6. (BLANK)

SECTION 7. (BLANK)

SECTION 8. MATERIALS

SECTION 8-1. MISCELLANEOUS

8-1.02 PREQUALIFIED AND TESTED SIGNING AND DELINEATION MATERIALS

The Department maintains the following list of Prequalified and Tested Signing and Delineation Materials. The Engineer shall not be precluded from sampling and testing products on the list of Prequalified and Tested Signing and Delineation Materials.

The manufacturer of products on the list of Prequalified and Tested Signing and Delineation Materials shall furnish the Engineer a Certificate of Compliance in conformance with the provisions in Section 6-1.07, "Certificates of Compliance," of the Standard Specifications for each type of traffic product supplied.

For those categories of materials included on the list of Prequalified and Tested Signing and Delineation Materials, only those products shown within the listing may be used in the work. Other categories of products, not included on the list of Prequalified and Tested Signing and Delineation Materials, may be used in the work provided they conform to the requirements of the Standard Specifications.

Materials and products may be added to the list of Prequalified and Tested Signing and Delineation Materials if the manufacturer submits a New Product Information Form to the New Product Coordinator at the Transportation Laboratory. Upon a Departmental request for samples, sufficient samples shall be submitted to permit performance of required tests. Approval of materials or products will depend upon compliance with the specifications and tests the Department may elect to perform.

PAVEMENT MARKERS, PERMANENT TYPE

Retroreflective With Abrasion Resistant Surface (ARS)

A. Apex, Model 921AR (100 mm x 100 mm) {4 inches x 4 inches}
B. Avery Dennison (formerly Stimsonite), Models C88 (100 mm x 100 mm) {4 inches x 4 inches}, 911 (100 mm x 100 mm) {4 inches x 4 inches} and 953 (70 mm x 114 mm) {2.75 inches x 4.5 inches}
C. Ray-O-Lite, Model "AA" ARS (100 mm x 100 mm) {4 inches x 4 inches}
D. 3M Series 290 (89 mm x 100 mm) {3.5 inches x 4 inches}
E. 3M Series 290 PSA, with pressure sensitive adhesive pad (89 mm x 100 mm) {3.5 inches x 4 inches}

Retroreflective With Abrasion Resistant Surface (ARS)

(for recessed applications only)

A. Avery Dennison (formerly Stimsonite), Model 948 (58 mm x 119 mm) {2.3 inches x 4.7 inches}
B. Avery Dennison (formerly Stimsonite), Model 944SB (51 mm x 100 mm) {2 inches x 4 inches}*
C. Ray-O-Lite, Model 2002 (58 mm x 117 mm) {2.3 inches x 4.6 inches}
D. Ray-O-Lite, Model 2004 ARS (51 mm x 100 mm) {2 inches x 4 inches}*

*For use only in 114 mm {4.5 inches} wide (older) recessed slots

Non-Reflective, 100 mm {4 inches}Round

A. Alpine Products, "D-Dot" and "ANR" (ABS)
B. Apex Universal (Ceramic)
C. Apex Universal, Models 929 (ABS) and 929PP (Polypropylene)
D. Elgin Molded Plastics, "Empco-Lite" Model 900 (ABS)
E. Glowlite (Ceramic)
F. Hi-Way Safety, Inc., Models P20-2000W and 2001Y (ABS)
G. Interstate Sales, "Diamond Back" (ABS) and (Polypropylene)
H. Novabrite Models Cdot (White) Cdot-y (Yellow), Ceramic
I. Novabrite Models Adot-w (White) Adot-y (Yellow), (ABS)
J. Novabrite Models Pdot-w (White) Pdot-y (Yellow), Polypropylene
K. Road Creations, Model RCB4NR (Acrylic)
L. Three D Traffic Works TD10000 (ABS), TD10500 (Polypropylene)
M. Zumar Industries, "Titan TM40A" (ABS)

PAVEMENT MARKERS, TEMPORARY TYPE

Temporary Markers For Long Term Day/Night Use (6 months or less)

A. Apex Universal, Model 924 (100 mm x 100 mm) {4 inches x 4 inches}
B. Elgin Molded Plastics, "Empco-Lite" Model 901 (100 mm x 100 mm) {4 inches x 4 inches}
C. Road Creations, Model R41C (100 mm x 100 mm) {4 inches x 4 inches}
D. Vega Molded Products "Temporary Road Marker" (75 mm x 100 mm) {3 inches x 4 inches}

Temporary Markers For Short Term Day/Night Use (14 days or less)

(For seal coat or chip seal applications, clear protective covers are required)

A. Apex Universal, Model 932
B. Bunzl Extrusion, Models T.O.M., T.R.P.M., and "HH" (High Heat)
C. Hi-Way Safety, Inc., Model 1280/1281

STRIPING AND PAVEMENT MARKING MATERIAL

Permanent Traffic Striping and Pavement Marking Tape

A. Advanced Traffic Marking, Series 300 and 400
B. Brite-Line, Series 1000
C. Brite-Line, "DeltaLine XRP"
D. Swarco Industries, "Director 35" (For transverse application only)
E. Swarco Industries, "Director 60"
F. 3M, "Stamark" Series 380 and 5730
G. 3M, "Stamark" Series 420 (For transverse application only)

Temporary (Removable) Striping and Pavement Marking Tape (6 months or less)

A. Advanced Traffic Marking, Series 200
B. Brite-Line, Series 100
C. Garlock Rubber Technologies, Series 2000
D. P.B. Laminations, Aztec, Grade 102
E. Swarco Industries, "Director-2"
F. Trelleborg Industri, R140 Series
G. 3M, Series 620 "CR", and Series A750
H. 3M, Series A145, Removable Black Line Mask
(Black Tape: for use only on Asphalt Concrete Surfaces)
I. Advanced Traffic Marking Black "Hide-A-Line"
(Black Tape: for use only on Asphalt Concrete Surfaces)
J. Brite-Line "BTR" Black Removable Tape
(Black Tape: for use only on Asphalt Concrete Surfaces)
K. Trelleborg Industri, RB-140
(Black Tape: for use only on Asphalt Concrete Surfaces)

Preformed Thermoplastic (Heated in place)

A. Avery Dennison, "Hotape"
B. Flint Trading, "Premark," "Premark 20/20 Flex," and "Premark 20/20 Flex Plus"

Ceramic Surfacing Laminate, 150 mm x 150 mm {6 inches x 6 inches}

A. Safeline Industries/Highway Ceramics, Inc.

CLASS 1 DELINEATORS

One Piece Driveable Flexible Type, 1700 mm {66 inches}

A. Bunzl Extrusion, "Flexi-Guide Models 400 and 566"
B. Carsonite, Curve-Flex CFRM-400
C. Carsonite, Roadmarker CRM-375

D. FlexStake, Model 654 TM
E. GreenLine Models HWD1-66 and CGD1-66
F. J. Miller Industries, Model JMI-375 (with soil anchor)

Special Use Type, 1700 mm {66 inches}

A. Bunzl Extrusion, Model FG 560 (with 450 mm {18 inches} U-Channel base)
B. Carsonite, "Survivor" (with 450 mm {18 inches} U-Channel base)
C. Carsonite, Roadmarker CRM-375 (with 450 mm {18 inches} U-Channel base)
D. FlexStake, Model 604
E. GreenLine Models HWDU and CGD (with 450 mm {18 inches} U-Channel base)
F. Impact Recovery Model D36, with #105 Driveable Base
G. Safe-Hit with 200 mm {8 inches}pavement anchor (SH248-GP1)
H. Safe-Hit with 380 mm {15 inches} soil anchor (SH248-GP2) and with 450 mm {18 inches}soil anchor (SH248-GP3)

Surface Mount Type, 1200 mm {48 inches}

A. Bent Manufacturing Company, Masterflex Model MF-180EX-48
B. Carsonite, "Super Duck II"
C. FlexStake, Surface Mount, Models 704 and 754 TM
D. Impact Recovery Model D48, with #101 Fixed (Surface-Mount) Base
E. Three D Traffic Works "Channelflex" ID No. 522248W

CHANNELIZERS

Surface Mount Type, 900 mm {36 inches}

A. Bent Manufacturing Company, Masterflex Models MF-360-36 (Round) and MF-180-36 (Flat)
B. Bunzl Extrusion, Flexi-Guide Models FG300LD and FG300UR
C. Carsonite, "Super Duck" (Flat SDF-436, Round SDR-336)
D. Carsonite, "Super Duck II" Model SDCF203601MB "The Channelizer"
E. FlexStake, Surface Mount, Models 703 and 753 TM
F. GreenLine, Model SMD-36
G. Hi-Way Safety, Inc. "Channel Guide Channelizer" Model CGC36
H. Impact Recovery Model D36, with #101 Fixed (Surface-Mount) Base
I. Repo, Models 300 and 400
J. Safe-Hit, Guide Post, Model SH236SMA
K. The Line Connection, "Dura-Post" Model DP36-3 (Permanent)
L. The Line Connection, "Dura-Post" Model DP36-3C (Temporary)
M. Three D Traffic Works "Channelflex" ID No. 522053W

Lane Separation System

A. Bunzl "Flexi-Guide (FG) 300 Curb System"
B. Qwick Kurb, "Klemmfix Guide System"
C. Recycled Technology, Inc. "Safe-Lane System"

CONICAL DELINEATORS, 1070 mm {42 inches}

(For 700 mm Traffic Cones, see Standard Specifications)

A. Bent Manufacturing Company "T-Top"
B. Plastic Safety Systems "Navigator-42"
C. Radiator Specialty Company "Enforcer"
D. Roadmaker Company "Stacker"
E. TrafFix Devices "Grabber"
F. Three D Traffic Works "Ringtop" TD7000, ID No. 742143

OBJECT MARKERS

Type "K", 450 mm {18 inches}

A. Bunzl, Model FG318PE
B. Carsonite, Model SMD 615
C. FlexStake, Model 701 KM
D. Repo, Models 300 and 400
E. Safe-Hit, Model SH718SMA
F. The Line Connection, Model DP21-4K

Type "K-4" / "Q" Object Markers, 600 mm {24 inches}

A. Bent Manufacturing "Masterflex" Model MF-360-24
B. Bunzl Extrusion, Model FG324PE
C. Carsonite, Super Duck II
D. FlexStake, Model 701KM
E. Repo, Models 300 and 400
F. Safe-Hit, Models SH8 24SMA_WA and SH8 24GP3_WA
G. The Line Connection, Model DP21-4Q
H. Three D Traffic Works "Q" Marker, ID No. 531702W

CONCRETE BARRIER MARKERS AND
TEMPORARY RAILING (TYPE K) REFLECTORS

Impactable Type

A. ARTUK, "FB"
B. Bunzl Extrusion, Models PCBM-12 and PCBM-T12
C. Duraflex Corp., "Flexx 2020" and "Electriflexx"
D. Hi-Way Safety, Inc., Model GMKRM100
E. Plastic Safety Systems "BAM" Models OM-BARR and OM-BWAR
F. Sun-Lab Technology, "Safety Guide Light Model TM-5"
G. Three D Traffic Works "Roadguide" 9304 Series, ID No. 903176 (One-Way), ID No. 903215 (Two-Way)

Non-Impactable Type

A. ARTUK, JD Series
B. Plastic Safety Systems "BAM" Models OM-BITARW and OM-BITARA
C. Vega Molded Products, Models GBM and JD

METAL BEAM GUARD RAIL POST MARKERS

(For use to the left of traffic)

A. Bunzl Extrusion, "Mini" (75 mm x 254 mm) {3 inches x 10 inches}

B. Creative Building Products, "Dura-Bull, Model 11201"
C. Duraflex Corp., "Railrider"

CONCRETE BARRIER DELINEATORS, 400 mm {16 inches}
(For use to the right of traffic)
A. Bunzl Extrusion, Model PCBM T-16
B. Safe-Hit, Model SH216RBM
C. Sun-Lab Technology, "Safety Guide Light, Model TM16," (75 mm x 300 mm) {3 inches x 12 inches}
D. Three D Traffic Works "Roadguide" ID No. 904364 (White), ID No. 904390 (Yellow)

CONCRETE BARRIER-MOUNTED MINI-DRUM (260 mm x 360 mm x 570 mm) {10 inches x 14 inches x 22 inches}

A. Stinson Equipment Company "SaddleMarker"

SOUND WALL DELINEATOR
(Applied vertically. Place top of 75 mm x 300 mm {3 inches x 12 inches} reflective element at 1200 mm {48 inches}above plane of roadway)
A. Bunzl Extrusion, PCBM S-36
B. Sun-Lab Technology, "Safety Guide Light, Model SM12," (75 mm x 300 mm) {3 inches x 12 inches}

GUARD RAILING DELINEATOR
(Place top of reflective element at 1200 mm {48 inches}above plane of roadway)

Wood Post Type, 686 mm {27 inches}

A. Bunzl Extrusion, FG 427 and FG 527
B. Carsonite, Model 427
C. FlexStake, Model 102 GR
D. GreenLine GRD 27
E. J. Miller Model JMI-375G
F. Safe-Hit, Model SH227GRD
G. Three D Traffic Works "Guardflex" TD9100 Series, ID No. 510476

Steel Post Type

A. Carsonite, Model CFGR-327 with CFGRBK300 Mounting Bracket

RETROREFLECTIVE SHEETING

Channelizers, Barrier Markers, and Delineators

A. Avery Dennison T-6500 Series (Formerly Stimsonite, Series 6200) (For rigid substrate devices only)
B. Avery Dennison WR-6100 Series
C. Nippon Carbide, Flexible Ultralite Grade (ULG) II
D. Reflexite, PC-1000 Metalized Polycarbonate
E. Reflexite, AC-1000 Acrylic
F. Reflexite, AP-1000 Metalized Polyester

G. Reflexite, Conformalight, AR-1000 Abrasion Resistant Coating
H. 3M, High Intensity

Traffic Cones, 330 mm {13 inches} Sleeves

A. Reflexite SB (Polyester), Vinyl or "TR" (Semi-transparent)

Traffic Cones, 100 mm and 150 mm {4 inches x 6 inches} Sleeves

A. Nippon Carbide, Flexible Ultralite Grade (ULG) II
B. Reflexite, Vinyl, "TR" (Semi-transparent) or "Conformalight"
C. 3M Series 3840

Barrels and Drums

A. Avery Dennison WR-6100
B. Nippon Carbide, Flexible Ultralite Grade (ULG) II
C. Reflexite, "Conformalight", "Super High Intensity" or "High Impact Drum Sheeting"
D. 3M Series 3810

Barricades: Type I, Medium-Intensity (Typically Enclosed Lens, Glass-Bead Element)

A. American Decal, Adcolite
B. Avery Dennison, T-1500 and T-1600 series
C. 3M Engineer Grade, Series 3170

Barricades: Type II, Medium-High-Intensity (Typically Enclosed Lens, Glass-Bead Element)

A. Avery Dennison, T-2500 Series
B. Kiwalite Type II
C. Nikkalite 1800 Series

Signs: Type II, Medium-High-Intensity (Typically Enclosed Lens, Glass-Bead Element)

A. Avery Dennison, T-2500 Series
B. Kiwalite, Type II
C. Nikkalite 1800 Series

Signs: Type III, High-Intensity (Typically Encapsulated Glass-Bead Element)

A. Avery Dennison, T-5500 and T-5500A Series
B. Nippon Carbide, Nikkalite Brand Ultralite Grade II
C. 3M Series 3870

Signs: Type IV, High-Intensity (Typically Unmetallized Microprismatic Element)

A. Avery Dennison, T-6500 Series (Formerly Stimsonite Series 6200)
B. Nippon Carbide, Crystal Grade, 94000 Series

Signs: Type VI, Elastomeric (Roll-Up) High-Intensity, without Adhesive

A. Avery Dennison, WU-6014
B. Novabrite LLC, "Econobrite"
C. Reflexite "Vinyl"
D. Reflexite "SuperBright"
E. Reflexite "Marathon"
F. 3M Series RS34 (Orange) and RS20 (Fluorescent orange)

Signs: Type VII, Super-High-Intensity (Typically Unmetallized Microprismatic Element)

A. 3M LDP Series 3924 (Fluorescent Red/Orange)
B. 3M LDP Series 3970

Signs: Type VIII, Super-High-Intensity (Typically Unmetallized Microprismatic Element)

A. Avery Dennison, T-7500 Series

Signs: Type IX, Very-High-Intensity (Typically Unmetallized Microprismatic Element)

A. 3M VIP Series 3981 Diamond Grade (Fluorescent yellow)
B. 3M VIP Series 3983 Diamond Grade (Fluorescent yellow/Green)
C. 3M VIP Series 3990 Diamond

SPECIALTY SIGNS

A. All Sign Products, STOP Sign (All Plastic), 750 mm {30 inches}
B. Relexite "Endurance" Work Zone Sign (with Semi-Rigid Plastic Substrate)

SIGN SUBSTRATE

Fiberglass Reinforced Plastic (FRP)

A. Fiber-Brite
B. Sequentia, "Polyplate"
C. Inteplast Group "InteCel" (13 mm {0.5-inch} for Post-Mounted CZ Signs, 1200 mm {48 inches}or less)

Aluminum Composite

A. Alcan Composites "Dibond Material, 2 mm {0.08-inch}" (for temporary construction signs only)
B. Mitsubishi Chemical America, Alpolic 350 (for temporary construction signs only)

SECTION 8-2. CONCRETE

8-2.__ PORTLAND CEMENT CONCRETE

Portland cement concrete shall conform to the provisions in Section 90, "Portland Cement Concrete," of the Standard Specifications and these special provisions.

The Department maintains a list of sources of fine and coarse aggregate that have been approved for use with a reduced amount of supplementary cementitious material in the total amount of cementitious material to be used. A source of aggregate will be considered for addition to the approved list if the producer of the aggregate submits to the Transportation Laboratory certified test results from a qualified testing laboratory that verify the aggregate complies with the requirements. Before the testing starts, the aggregate test shall be registered with the Department. A registration number can be obtained by calling (916) 227-7228. The registration number shall be used as the identification for the aggregate sample in correspondence with the Department. Upon request, a split of the tested sample shall be provided to the Department. Approval of aggregate will depend upon compliance with the specifications, based on the certified test results submitted, together with any replicate testing the Department may elect to perform. Approval will expire 3 years from the date the most recent registered and evaluated sample was collected from the aggregate source.

Qualified testing laboratories shall conform to the following requirements:

1. Laboratories performing ASTM Designation: C 1293 shall participate in the Cement and Concrete Reference Laboratory (CCRL) Concrete Proficiency Sample Program and shall have received a score of 3 or better on each test of the previous 2 sets of concrete samples.
2. Laboratories performing ASTM Designation: C 1260 shall participate in the Cement and Concrete Reference Laboratory (CCRL) Pozzolan Proficiency Sample Program and shall have received a score of 3 or better on the shrinkage and soundness tests of the previous 2 sets of pozzolan samples.

Aggregates on the list shall conform to one of the following requirements:

1. When the aggregate is tested in conformance with the requirements in California Test 554 and ASTM Designation: C 1293, the average expansion at one year shall be less than or equal to 0.040 percent; or
2. When the aggregate is tested in conformance with the requirements in California Test 554 and ASTM Designation: C 1260, the average of the expansion at 16 days shall be less than or equal to 0.15 percent.

If the aggregates used in the concrete are on the Department's list, the minimum amount of supplementary cementitious material shall conform to the following:

1. If fly ash or natural pozzolan conforming to the provisions in Section 90-2.01C, "Required Use of Supplementary Cementitious Materials," of the Standard Specifications is used, the minimum amount of supplementary cementitious material shall be 15 percent by weight of the total cementitious material; or
2. If silica fume conforming to the provisions in Section 90-2.01C, "Required Use of Supplementary Cementitious Materials," of the Standard Specifications is used, the minimum amount of supplementary cementitious material shall be 7 percent by weight of the total cementitious material.

The limitation on tricalcium silicate (C_3S) content in Type II cement specified in Section 90-2.01A, "Cement," of the Standard Specifications shall not apply.

SECTION 8-3. WELDING

8-3.01 WELDING

GENERAL

Flux cored welding electrodes conforming to the requirements of AWS A5.20 E6XT-4 or E7XT-4 shall not be used to perform welding for this project.

Wherever reference is made to the following AWS welding codes in the Standard Specifications, on the plans, or in these special provisions, the year of adoption for these codes shall be as listed:

AWS Code	Year of Adoption
D1.1	2006
D1.4	2005
D1.5	2002
D1.6	1999

Requirements of the AWS welding codes shall apply unless otherwise specified in the Standard Specifications, on the plans, or in these special provisions. Wherever the abbreviation AWS is used, it shall be equivalent to the abbreviations ANSI/AWS or AASHTO/AWS.

Section 6.1.1.1 of AWS D1.5 is replaced with the following:

Quality Control (QC) shall be the responsibility of the Contractor. As a minimum, the Contractor shall perform inspection and testing of each weld joint prior to welding, during welding, and after welding as specified in this section and as necessary to ensure that materials and workmanship conform to the requirements of the contract documents.

Unless otherwise specified, Sections 6.1.3 through 6.1.4.3 of AWS D1.1, Section 7.1.2 of AWS D1.4, and Sections 6.1.1.2 through 6.1.3.3 of AWS D1.5 are replaced with the following:

The QC Inspector shall be the duly designated person who acts for and on behalf of the Contractor for inspection, testing, and quality related matters for all welding.

Quality Assurance (QA) is the prerogative of the Engineer. The QA Inspector is the duly designated person who acts for and on behalf of the Engineer.

The QC Inspector shall be responsible for quality control acceptance or rejection of materials and workmanship, and shall be currently certified as an AWS Certified Welding Inspector (CWI) in conformance with the requirements in AWS QC1, "Standard for AWS Certification of Welding Inspectors."

The QC Inspector may be assisted by an Assistant QC Inspector provided that this individual is currently certified as an AWS Certified Associate Welding Inspector (CAWI) in conformance with the requirements in AWS QC1, "Standard for AWS Certification of Welding Inspectors." The Assistant QC Inspector may perform inspection under the direct supervision of the QC Inspector provided the assistant is always within visible and audible range of the QC Inspector. The QC Inspector shall be responsible for signing all reports and for determining if welded

materials conform to workmanship and acceptance criteria. The ratio of QC Assistants to QC Inspectors shall not exceed 5 to 1.

When the term "Inspector" is used without further qualification, it shall refer to the QC Inspector.

When any work is welded in conformance with the provisions in Section 75, "Miscellaneous Metal," of the Standard Specifications, not including Section 75-1.035, "Bridge Joint Restrainer Units," of the Standard Specifications, Section 6.1.4 of AWS D1.1 is replaced with the following:

The QC Inspector shall be responsible for quality control acceptance or rejection of materials and workmanship and shall be currently certified as an AWS CWI in conformance with the requirements in AWS QC1, "Standard for AWS Certification of Welding Inspectors," or as a Welding Inspector Specialist (WIS) in conformance with the requirements in AWS B5.2, "Specification for the Qualification of Welding Inspector Specialists and Welding Inspector Assistants."

Section 6.14.6, "Personnel Qualification," of AWS D1.1, Section 7.8, "Personnel Qualification," of AWS D1.4, and Section 6.1.3.4, "Personnel Qualification," of AWS D1.5 are replaced with the following:

Personnel performing nondestructive testing (NDT) shall be qualified and certified in conformance with the requirements of the American Society for Nondestructive Testing (ASNT) Recommended Practice No. SNT-TC-1A and the Written Practice of the NDT firm. The Written Practice of the NDT firm shall meet or exceed the guidelines of the ASNT Recommended Practice No. SNT-TC-1A. Individuals who perform NDT, review the results, and prepare the written reports shall be either:

A. Certified NDT Level II technicians, or;
B. Level III technicians who hold a current ASNT Level III certificate in that discipline and are authorized and certified to perform the work of Level II technicians.

Section 6.5.4 of AWS D1.5 is replaced with the following:

The QC Inspector shall inspect and approve each joint preparation, assembly practice, welding technique, joint fit-up, and the performance of each welder, welding operator, and tack welder to make certain that the applicable requirements of this code and the approved Welding Procedure Specification (WPS) are met. The QC Inspector shall examine the work to make certain that it meets the requirements of Sections 3 and 6.26. The size and contour of all welds shall be measured using suitable gages. Visual inspection for cracks in welds and base metal, and for other discontinuities shall be aided by strong light, magnifiers, or such other devices as may be helpful. Acceptance criteria different from those specified in this code may be used when approved by the Engineer.

Section 6.6.5, "Nonspecified NDT Other than Visual," of AWS D1.1, Section 7.6.5 of AWS D1.4 and Section 6.6.5 of AWS D1.5 shall not apply.

For any welding, the Engineer may direct the Contractor to perform NDT that is in addition to the visual inspection or NDT specified in the AWS or other specified welding codes, in the Standard Specifications, or in these special provisions. Except as provided for in these special provisions, additional NDT required by the Engineer, and associated repair work, will be paid for as extra work as provided in Section 4-1.03D, "Extra Work," of the Standard Specifications. Prior to release of welded material by the Engineer, if testing by NDT methods other than those originally specified discloses an attempt to defraud or reveals a gross nonconformance, all costs associated with the repair of the deficient area, including NDT of the weld and of the repair, and any delays caused by the repair, shall be at the Contractor’s expense. A gross nonconformance is defined as the sum of planar type rejectable indications in more than 20 percent of the tested length.

When less than 100 percent of NDT is specified for any weld, it is expected that the entire length of weld meet the specified acceptance-rejection criteria. Should any welding deficiencies be discovered by additional NDT directed or performed by the Engineer that utilizes the same NDT method as that originally specified, all costs associated with the repair of the deficient area, including NDT of the weld and of the weld repair, and any delays caused by the repair, shall be at the Contractor's expense.

Repair work to correct welding deficiencies discovered by visual inspection directed or performed by the Engineer, and any associated delays or expenses caused to the Contractor by performing these repairs, shall be at the Contractor's expense.

The Engineer shall have the authority to verify the qualifications or certifications of any welder, QC Inspector, or NDT personnel to specified levels by retests or other means approved by the Engineer.

Inspection and approval of all joint preparations, assembly practices, joint fit-ups, welding techniques, and the performance of each welder, welding operator, and tack welder shall be documented by the QC Inspector on a daily basis for each day welding is performed. For each inspection, including fit-up, Welding Procedure Specification (WPS) verification, and final weld inspection, the QC Inspector shall confirm and document compliance with the requirements of the AWS or other specified code criteria and the requirements of these special provisions on all welded joints before welding, during welding, and after the completion of each weld.

In addition to the requirements specified in the applicable code, the period of effectiveness for a welder's or welding operator's qualification shall be a maximum of 3 years for the same weld process, welding position, and weld type. If welding will be performed without gas shielding, then qualification shall also be without gas shielding. Excluding welding of fracture critical members, a valid qualification at the beginning of work on a contract will be acceptable for the entire period of the contract, as long as the welder's or welding operator's work remains satisfactory.

In addition to the requirements of AWS D1.1, welding procedures qualification for work welded in conformance with that code shall conform to the following requirements:

A. The travel speed, amperage, and voltage values that are used for tests conducted per AWS D1.1, Section 4.1.1, shall be consistent for each pass in a weld joint and shall in no case vary by more than ±10 percent for travel speed, ±10 percent for amperage, and ±7 percent for voltage as measured from a predetermined target value or average within each weld pass. The travel speed shall in no case vary by more than ±15 percent when using submerged arc welding.

B. When a nonstandard weld joint is to be made using a combination of WPSs, a single test may be conducted combining the WPSs to be used in production, provided the essential variables, including weld bead placement, of each process are limited to those established in Table 4.5.

In addition to the requirements of AWS D1.5, Section 5.12 or 5.13, welding procedures qualification for work welded in conformance with that code shall conform to the following requirements:

A. Unless considered prequalified, fillet welds shall be qualified in each position. The fillet weld soundness test shall be conducted using the essential variables of the WPS as established by the Procedure Qualification Record (PQR).
B. For qualification of joints that do not conform to Figures 2.4 and 2.5 of AWS D1.5, a minimum of two WPS qualification tests are required. The tests shall be conducted using both Figure 5.1 and Figure 5.3. The test conforming to Figure 5.1 shall be conducted in conformance with AWS D1.5, Section 5.12 or 5.13. The test conforming to Figure 5.3 shall be conducted using the welding electrical parameters that were established for the test conducted conforming to Figure 5.1. The ranges of welding electrical parameters established during welding per Figure 5.1 in conformance with AWS D1.5, Section 5.12, shall be further restricted according to the limits in Table 5.3 during welding per Figure 5.3.
C. Multiple zones within a weld joint may be qualified. The travel speed, amperage, and voltage values that are used for tests conducted per AWS D1.5 Section 5.13 shall be consistent for each pass in a weld joint, and shall in no case vary by more than ±10 percent for travel speed, ±10 percent for amperage, and ±7 percent for voltage as measured from a predetermined target value or average within each weld pass or zone. The travel speed shall in no case vary by more than ±15 percent when using submerged arc welding.
D. For a WPS qualified in conformance with AWS D1.5 Section 5.13, the values to be used for calculating ranges for current and voltage shall be based on the average of all weld passes made in the test. Heat input shall be calculated using the average of current and voltage of all weld passes made in the test for a WPS qualified in conformance with Section 5.12 or 5.13.
E. Macroetch tests are required for WPS qualification tests, and acceptance shall be per AWS D1.5 Section 5.19.3.
F. When a nonstandard weld joint is to be made using a combination of WPSs, a test conforming to Figure 5.3 may be conducted combining the WPSs to be used in production, provided the essential variables, including weld bead placement, of each process are limited to those established in Table 5.3.
G. Prior to preparing mechanical test specimens, the PQR welds shall be inspected by visual and radiographic tests. Backing bar shall be 3 inches in width and shall remain in place during NDT testing. Results of the visual and radiographic tests shall comply with AWS D1.5 Section 6.26.2, excluding Section 6.26.2.2. Test plates that do not comply with both tests shall not be used.

WELDING QUALITY CONTROL

Welding quality control shall conform to the requirements in the AWS or other specified welding codes, the Standard Specifications, and these special provisions.

Unless otherwise specified, welding quality control shall apply when any work is welded in conformance with the provisions in Section 49, "Piling," Section 52, "Reinforcement," Section 55, "Steel Structures," or Section 75-1.035, "Bridge Joint Restrainer Units," of the Standard Specifications.

All welding will require inspection by the Engineer. The Contractor shall request inspection at least 3 working days prior to the beginning of welding for locations within California and 5 working days for locations outside of California. The Contractor shall request inspection at:

http://www.dot.ca.gov/hq/esc/Translab/smbforms.htm

Continuous inspection shall be provided when any welding is being performed. Continuous inspection, as a minimum, shall include having a QC Inspector within such close proximity of all welders or welding operators so that inspections by the QC Inspector of each welding operation at each welding location does not lapse for a period exceeding 30 minutes.

When joint weld details that are not prequalified to the details of Section 3 of AWS D1.1 or to the details of Figure 2.4 or 2.5 of AWS D1.5 are proposed for use in the work, the joint details, their intended locations, and the proposed welding parameters and essential variables, shall be approved by the Engineer. The Contractor shall allow the Engineer 2 weeks to complete the review of the proposed joint detail locations. In the event the Engineer fails to complete the review within the time allowed, and if, in the opinion of the Engineer, completion of the work is delayed or interfered with by reason of the Engineer's delay in completing the review, the Contractor will be compensated for any resulting loss, and an extension of time will be granted, in the same manner as provided for in Section 8-1.09, "Right of Way Delays," of the Standard Specifications. Upon approval of the proposed joint detail locations and qualification of the proposed joint details, welders and welding operators using these details shall perform a qualification test plate using the WPS variables and the joint detail to be used in production. The test plate shall have the maximum thickness to be used in production and a minimum length of 18 inches. The test plate shall be mechanically and radiographically tested. Mechanical and radiographic testing and acceptance criteria shall be as specified in the applicable AWS codes.

The Engineer will witness all qualification tests for WPSs that were not previously approved by the Department. Unless otherwise specified, an approved independent third party will witness the qualification tests for welders or welding operators. The independent third party shall be a current CWI and shall not be an employee of the contractor performing the welding. The Contractor shall allow the Engineer 2 weeks to review the qualifications and copy of the current certification of the independent third party. In the event the Engineer fails to complete the review within the time allowed, and if, in the opinion of the Engineer, completion of the work is delayed or interfered with by reason of the Engineer's delay in completing the review, the Contractor will be compensated for any resulting loss, and an extension of time will be granted, in the same manner as provided for in Section 8-1.09, "Right of Way Delays," of the Standard Specifications. The Contractor shall notify the Engineer one week prior to performing any qualification tests. Witnessing of qualification tests by the Engineer shall not constitute approval of the intended joint locations, welding parameters, or essential variables.

The Contractor shall designate in writing a welding Quality Control Manager (QCM). The QCM shall be responsible directly to the Contractor for the quality of welding, including materials and workmanship, performed by the Contractor and subcontractors.

The QCM shall be the sole individual responsible to the Contractor for submitting, receiving, reviewing, and approving all correspondence, required submittals, and reports to and from the Engineer. The QCM shall be a registered professional engineer or shall be currently certified as a CWI.

Unless the QCM is hired by a subcontractor providing only QC services, the QCM shall not be employed or compensated by any subcontractor, or by other persons or entities hired by subcontractors, who will provide other services or materials for the project. The QCM may be an employee of the Contractor.

Welding inspection personnel or NDT firms to be used in the work shall not be employed or compensated by any subcontractor, or by other persons or entities hired by subcontractors, who will provide other services or materials for the project, except for the following conditions:

A. The work is welded in conformance with AWS D1.5 and is performed at a permanent fabrication or manufacturing facility that is certified under the AISC Quality Certification Program, Category Cbr, Major Steel Bridges and Fracture Critical endorsement F, when applicable.
B. The welding is performed on pipe pile material at a permanent pipe manufacturing facility authorized to apply the American Petroleum Institute (API) monogram for API 5L pipe.

For welding performed at such facilities, the inspection personnel or NDT firms may be employed or compensated by the facility performing the welding provided the facility maintains a QC program that is independent from production.

Prior to submitting the Welding Quality Control Plan (WQCP) required herein, a prewelding meeting between the Engineer, the Contractor's QCM, and a representative from each entity performing welding or inspection for this project, shall be held to discuss the requirements for the WQCP.

The Contractor shall submit to the Engineer, in conformance with the provisions in Section 5-1.02, "Plans and Working Drawings," of the Standard Specifications, 2 copies of a separate WQCP for each subcontractor or supplier for each item of work for which welding is to be performed.

The Contractor shall allow the Engineer 2 weeks to review the WQCP submittal after a complete plan has been received. No welding shall be performed until the WQCP is approved in writing by the Engineer. In the event the Engineer fails to complete the review within the time allowed, and if, in the opinion of the Engineer, completion of the work is delayed or interfered with by reason of the Engineer's delay in completing the review, the Contractor will be compensated for any resulting loss, and an extension of time will be granted, in the same manner as provided for in Section 8-1.09, "Right of Way Delays," of the Standard Specifications.

An amended WQCP or any addendum to the approved WQCP shall be submitted to, and approved in writing by the Engineer, for proposed revisions to the approved WQCP. An amended WQCP or addendum will be required for revisions to the WQCP, including but not limited to a revised WPS; additional welders; changes in NDT firms, QC, or NDT personnel or procedures; or updated systems for tracking and identifying welds. The Engineer shall have

one week to complete the review of the amended WQCP or addendum. Work affected by the proposed revisions shall not be performed until the amended WQCP or addendum has been approved. In the event the Engineer fails to complete the review within the time allowed, and if, in the opinion of the Engineer, completion of the work is delayed or interfered with by reason of the Engineer's delay in completing the review, the Contractor will be compensated for any resulting loss, and an extension of time will be granted, in the same manner as provided for in Section 8-1.09, "Right of Way Delays," of the Standard Specifications.

Information regarding the contents, format, and organization of a WQCP, is available at the Transportation Laboratory and at:

http://www.dot.ca.gov/hq/esc/Translab/smbresources.htm

After final approval of the WQCP, amended WQCP, or addendum, the Contractor shall submit 7 copies to the Engineer of the approved documents. A copy of the Engineer approved document shall be available at each location where welding is to be performed.

A daily production log for welding shall be kept for each day that welding is performed. The log shall clearly indicate the locations of all welding. The log shall include the welders' names, amount of welding performed, any problems or deficiencies discovered, and any testing or repair work performed, at each location. The daily report from each QC Inspector shall also be included in the log.

The following items shall be included in a Welding Report that is to be submitted to the Engineer within 2 weeks following the performance of any welding:

A. A daily production log.
B. Reports of all visual weld inspections and NDT.
C. Radiographs and radiographic reports, and other required NDT reports.
D. A summary of welding and NDT activities that occurred during the reporting period.
E. Reports of each application of heat straightening.
F. A summarized log listing the rejected lengths of weld by welder, position, process, joint configuration, and piece number.
G. Documentation that the Contractor has evaluated all radiographs and other nondestructive tests and corrected all rejectable deficiencies, and that all repaired welds have been reexamined using the required NDT and found acceptable.

The following information shall be clearly written on the outside of radiographic envelopes: name of the QCM, name of the nondestructive testing firm, name of the radiographer, date, contract number, complete part description, and all included weld numbers, report numbers, and station markers or views, as detailed in the WQCP. In addition, all interleaves shall have clearly written on them the part description and all included weld numbers and station markers or views, as detailed in the WQCP. A maximum of 2 pieces of film shall be used for each interleave.

Reports of all visual inspections and NDT shall be signed by the inspector or technician and submitted daily to the QCM for review and signature prior to submittal to the Engineer. Corresponding names shall be clearly printed or typewritten next to all signatures. Reports of all NDT, whether specified, additional, or informational, performed by the Contractor shall be submitted to the Engineer.

The Engineer will review the Welding Report to determine if the Contractor is in conformance with the WQCP. Unless otherwise specified, the Engineer shall be allowed 2 weeks to review the report and respond in writing after the complete Welding Report has been received. Prior to receiving notification from the Engineer of the Contractor's conformance with the WQCP, the Contractor may encase in concrete or cover welds for which the Welding Report has been submitted. However, should the Contractor elect to encase or cover those welds prior to receiving notification from the Engineer, it is expressly understood that the Contractor shall not be relieved of the responsibility for incorporating material in the work that conforms to the requirements of the plans and specifications. Material not conforming to these requirements will be subject to rejection. Should the Contractor elect to wait to encase or cover welds pending notification by the Engineer, and in the event the Engineer fails to complete the review within the time allowed, and if, in the opinion of the Engineer, completion of the work is delayed or interfered with by reason of the Engineer's delay in completing the review, the Contractor will be compensated for any resulting loss, and an extension of time will be granted, in the same manner as provided for in Section 8-1.09, "Right of Way Delays," of the Standard Specifications.

In addition to the requirements in AWS D1.1 and AWS D1.5, second-time excavations of welds or base metal to repair unacceptable discontinuities, regardless of NDT method, and all repairs of cracks require prior approval of the Engineer.

The Engineer shall be notified immediately in writing when welding problems, deficiencies, base metal repairs, or any other type of repairs not submitted in the WQCP are discovered, and also of the proposed repair procedures to correct them. For requests to perform second-time repairs or repairs of cracks, the Contractor shall include an engineering evaluation of the proposed repair. The engineering evaluation, at a minimum, shall address the following:

A. What is causing each defect?
B. Why the repair will not degrade the material properties?
C. What steps are being taken to prevent similar defects from happening again?

The Contractor shall allow the Engineer one week to review these procedures. No remedial work shall begin until the repair procedures are approved in writing by the Engineer. In the event the Engineer fails to complete the review within the time allowed, and if, in the opinion of the Engineer, completion of the work is delayed or interfered with by reason of the Engineer's delay in completing the review, the Contractor will be compensated for any resulting loss, and an extension of time will be granted, in the same manner as provided for in Section 8-1.09, "Right of Way Delays," of the Standard Specifications.

The QCM shall sign and furnish to the Engineer, a Certificate of Compliance in conformance with the provisions in Section 6-1.07, "Certificates of Compliance," of the Standard Specifications for each item of work for which welding was performed. The certificate shall state that all of the materials and workmanship incorporated in the work, and all required tests and inspections of this work, have been performed in conformance with the details shown on the plans, the Standard Specifications, and these special provisions.

WELDING FOR OVERHEAD SIGN AND POLE STRUCTURES

The Contractor shall meet the following requirements for any work welded in conformance with the provisions in Section 56-1, "Overhead Sign Structures," or Section 86-2.04, "Standards, Steel Pedestals and Posts," of the Standard Specifications.

Welding inspection personnel or NDT firms to be used in the work shall not be employed or compensated by any subcontractor, or by other persons or entities hired by subcontractors, who will provide other services or materials for the project, except for when the welding is performed at a permanent fabrication or manufacturing facility which is certified under the AISC Quality Certification Program, Category Sbd, Conventional Steel Building Structures.

Welding Qualification Audit

Contractors or subcontractors performing welding operations for overhead sign and pole structures shall not deliver materials to the project without having successfully completed the Department's "Manufacturing Qualification Audit for Overhead Sign and Pole Structures," hereinafter referred to as the audit, not more than one year prior to the delivery of the materials. The Engineer will perform the audit. Copies of the audit form, and procedures for requesting and completing the audit, are available at the Transportation Laboratory or at:

http://www.dot.ca.gov/hq/esc/Translab/smbresources.htm

An audit that was approved by the Engineer no more than one year prior to the beginning of work on this contract will be acceptable for the entire period of this contract, provided the Engineer determines the audit was for the same type of work that is to be performed on this contract.

Successful completion of an audit shall not relieve the Contractor of the responsibility for furnishing materials or producing finished work of the quality specified in these special provisions and as shown on the plans.

Welding Report

For work welded in conformance with the provisions in Section 56-1, "Overhead Sign Structures," or Section 86-2.04, "Standards, Steel Pedestals and Posts," of the Standard Specifications, a Welding Report shall be submitted in conformance with the provisions in "Welding Quality Control" of these special provisions.

PAYMENT

Full compensation for conforming to the requirements of "Welding" shall be considered as included in the contract prices paid for the various items of work involved and no additional compensation will be allowed therefor.

SECTION 9. (BLANK)

SECTION 10. CONSTRUCTION DETAILS

SECTION 10-1. GENERAL

10-1.01 ORDER OF WORK

Order of work shall conform to the provisions in Section 5-1.05, "Order of Work," of the Standard Specifications and these special provisions.

The first order of work shall be to place the order for the traffic signal equipment. The Engineer shall be furnished a statement from the vendor that the order for the traffic signal equipment has been received and accepted by the vendor.

The first order of work for the Stage 1 construction shall be construction of the CMU block wall, including grading and drainage work associated with the CMU block wall. Existing wood fence behind the CMU block wall shall not be removed until the CMU block wall is completed and existing wood fencing is extended to the face of the CMU block wall.

For construction adjacent to the Folsom Lake State Recreation Area, the first order of work shall be to install the new fence adjacent to the State Park.

The uppermost layer of new pavement shall not be placed until all underlying conduits and loop detectors have been installed.

Prior to commencement of the traffic signal functional test at any location, all items of work related to signal control shall be completed and all roadside signs, pavement delineation, and pavement markings shall be in place at that location.

Attention is directed to "Maintaining Traffic" and "Temporary Pavement Delineation" of these special provisions and to the stage construction sheets of the plans.

Attention is directed to "Progress Schedule (Critical Path Method)" of these special provisions regarding the submittal of a general time-scaled logic diagram within 10 days after approval of the contract. The diagram shall be submitted prior to performing any work that may be affected by any proposed deviations to the construction staging of the project.

The work shall be performed in conformance with the stages of construction shown on the plans. Nonconflicting work in subsequent stages may proceed concurrently with work in preceding stages, provided satisfactory progress is maintained in the preceding stages of construction.

In each stage, after completion of the preceding stage, unless otherwise specified herein, the first order of work shall be the removal of existing pavement delineation as directed by the Engineer. Pavement delineation removal shall be coordinated with new delineation so that lane lines are provided at all times on traveled ways open to public traffic.

Before obliterating any pavement delineation (traffic stripes, pavement markings, and pavement markers) that is to be replaced on the same alignment and location, as determined by the Engineer, the pavement delineation shall be referenced by the Contractor, with a sufficient number of control points to reestablish the alignment and location of the new pavement delineation. The references shall include the limits or changes in striping pattern, including one- and 2-way barrier lines, limit lines, crosswalks and other pavement markings. Full compensation for referencing existing pavement delineation shall be considered as included in the contract prices paid for new pavement delineation and no additional compensation will be allowed therefor.

Prior to applying asphalt concrete (open graded) pavement, the Contractor shall cover all manholes, valve and monument covers, grates, or other exposed facilities located within the area of application, using a plastic or oil resistant construction paper secured to the facility being covered by tape or adhesive. The covered facilities shall be referenced by the Contractor, with a sufficient number of control points to relocate the facilities after the asphalt concrete has been

placed. After completion of the asphalt concrete paving operation, all covers shall be removed and disposed of in a manner satisfactory to the Engineer. Full compensation for covering manholes, valve and monument covers, grates, or other exposed facilities, referencing, and removing temporary cover shall be considered as included in the contract price paid per ton for asphalt concrete (open graded), and no additional compensation will be allowed therefor.

Construction of the new structural section adjacent to the existing traveled way shall be performed in successive and, once all operations are under way, concurrent operations of excavating, preparing subgrade, placing base materials and paving. Excavation within 6 feet of the existing traveled way shall not precede the paving operation by more than 2 working days unless:

A. Approved in writing by the Engineer and;
B. Material is placed and compacted against the vertical cuts within 6 feet of the existing traveled way. During excavation operations, native material may be used for this purpose, however, once the placing of the structural section commences, structural material shall be used. The material shall be placed to the level of the elevation of the top of existing pavement and tapered at a slope of 4:1 (horizontal:vertical) or flatter to the bottom of the excavation. Treated base shall not be used for the taper. Full compensation for placing the material on a 4:1 (horizontal:vertical) slope, regardless of the number of times it is required, and subsequent removing or reshaping of the material to the lines and grades shown on the plans shall be considered as included in the contract price paid for the materials involved and no additional compensation will be allowed therefor. No payment will be made for material placed in excess of that required for the structural section.

At the end of each working day if a difference in excess of 0.25 foot exists between the elevation of the existing pavement and the elevation of excavations within 4 feet of the traveled way, material shall be placed and compacted against the vertical cuts adjacent to the traveled way. During excavation operations, native material may be used for this purpose; however, once placing of the structural section commences, structural material shall be used. The material shall be placed to the level of the elevation of the top of existing pavement and tapered at a slope of 4:1 (horizontal:vertical) or flatter to the bottom of the excavation. Full compensation for placing the material on a 1:4 slope, regardless of the number of times the material is required, and subsequent removing or reshaping of the material to the lines and grades shown on the plans shall be considered as included in the contract price paid for the materials involved and no additional compensation will be allowed therefor. No payment will be made for material placed in excess of that required for the structural section.

Not less than 60 days prior to planting the plants, the Contractor shall furnish the Engineer a statement from the vendor that the order for the plants required for this contract, including inspection plants, has been received and accepted by the vendor. The statement from the vendor shall include the names, sizes, and quantities of plants ordered and the anticipated date of delivery.

The Contractor shall place orders for replacement plants with the vendor at the appropriate time so that the roots of the replacement plants are not in a root-bound condition.

Not less than 60 days prior to applying seeds, the Contractor shall furnish the Engineer a statement from the vendor that the order for the seed required for this contract has been received and accepted by the vendor. The statement from the vendor shall include the names and quantity of seed ordered and the anticipated date of delivery.

Attention is directed to "Irrigation Systems Functional Test" of these special provisions, regarding restrictions for planting operations.

Attention is directed to Section 20-5.027B, "Wiring Plans and Diagrams," of the Standard Specifications regarding submittal of working drawings.

Attention is directed to "Irrigation Controller Enclosure Cabinet" of these special provisions regarding preinstalling irrigation components in the irrigation controller enclosure cabinet prior to field installation.

10-1.02 WATER POLLUTION CONTROL

GENERAL

Water pollution control work shall conform to the provisions in Section 7-1.01G, "Water Pollution," of the Standard Specifications, section of these special provisions entitled "Relations With California Regional Water Quality Control Board," and these special provisions.

The Contractor may obtain other National Pollutant Discharge Elimination System (NPDES) permits that apply to activities and mobile operations within or outside of the project limits including asphalt batch plants, material borrow areas, concrete plants, staging areas, storage yards, or access roads.

The Contractor shall perform water pollution control work in conformance with the requirements in the "Storm Water Pollution Prevention Plan (SWPPP) and Water Pollution Control Program (WPCP) Preparation Manual" and addenda in effect on the day the Notice to Contractors is dated. This manual is referred to as the "Preparation Manual." Copies of the Preparation Manual may be obtained from:

State of California
Department of Transportation
Publication Distribution Unit
1900 Royal Oaks Drive
Sacramento, California 95815
Telephone: (916) 445-3520

The Preparation Manual and other references for performing water pollution control work are available from the Department's Construction Storm Water and Water Pollution Control web site at:

http://www.dot.ca.gov/hq/construc/stormwater/stormwater1.htm

The Contractor shall designate in writing a Water Pollution Control Manager (WPCM). The Contractor shall submit a statement of qualifications describing the training, work history, and expertise of the proposed WPCM. The qualifications shall include either:

A. A minimum of 24 hours of Department approved storm water management training described at Department's Construction Storm Water and Water Pollution Control web site.
B. Certification as a Certified Professional in Erosion and Sediment Control (CPESC).

The WPCM shall be:

1. Responsible for water pollution control work.
2. The primary contact for water pollution control work.
3. Have authority to mobilize crews to make immediate repairs to water pollution control practices.

The Contractor may designate one manager to prepare the SWPPP and a different manager to implement the plan.

STORM WATER POLLUTION PREVENTION PLAN

The Contractor shall submit a Storm Water Pollution Prevention Plan (SWPPP) to the Engineer for approval. The SWPPP shall conform to the requirements in the Preparation Manual, the NPDES permit, and these special provisions. The SWPPP shall be submitted in place of the water pollution control program required by the provisions in Section 7-1.01G, "Water Pollution," of the Standard Specifications.

The SWPPP shall include water pollution control practices:

A. For storm water and non-storm water from areas outside of the job site related to construction activities for this contract such as:

    1. Staging areas.
    2. Storage yards.
    3. Access roads.

B. Appropriate for each season as described in "Implementation Requirements" of these special provisions.
C. For activities or mobile operations related to all NPDES permits.

The SWPPP shall include a schedule that:

A. Describes when work activities that could cause water pollution will be performed.
B. Identifies soil stabilization and sediment control practices for disturbed soil area.
C. Includes dates when these practices will be 25, 50, and 100 percent complete.
D. Shows 100 percent completion of these practices before the rainy season.

The SWPPP shall include the following temporary water pollution control practices and their associated contract items of work as shown on the plans or specified in these special provisions:

A. Temporary Soil Stabilization

B. Temporary Sediment Control

C. Tracking Control

D. Wind Erosion Control

E. Non-Storm Water Management

F. Waste Management and Materials Pollution Control

The SWPPP shall include the following contract items of work for permanent water pollution control as shown on the plans or as specified in these special provisions:

A. Erosion Control (Type D)
B. Rock Slope Protection (RSP) (Facing, Method B)
C. Rock Slope Protection (RSP) (No. 3, Method B)
D. Rock Slope Protection Fabric

Within 20 days after contract approval, the Contractor shall submit 3 copies of the SWPPP to the Engineer. The Contractor shall allow 10 days for the Engineer's review. If revisions are required, the Engineer will provide comments and specify the date that the review stopped. The Contractor shall revise and resubmit the SWPPP within 15 days of receipt of the Engineer's comments. The Engineer's review will resume when the complete SWPPP is resubmitted. When the Engineer approves the SWPPP, the Contractor shall submit 4 copies of the approved SWPPP to the Engineer. The Contractor may proceed with construction activities if the Engineer conditionally approves the SWPPP while minor revisions are being completed. If the Engineer fails to complete the review within the time allowed and if, in the opinion of the Engineer, completion of the work is delayed or interfered with by reason of the Engineer's delay, the Contractor will be compensated for resulting losses, and an extension of time will be granted, as provided for in Section 8-1.09, "Right of Way Delays," of the Standard Specifications.

The SWPPP shall include a copy of the CDFG agreement, the RWQCD permit and the US Army Corps of Engineers agreement.

The Contractor shall not perform work that may cause water pollution until the SWPPP has been approved by the Engineer. The Engineer's review and approval shall not waive any contract requirements and shall not relieve the Contractor from complying with Federal, State and local laws, regulations, and requirements.

The Contractor shall amend the SWPPP annually and shall resubmit it to the Engineer 25 days before the defined rainy season.

If there is a change in construction schedule or activities, the Contractor shall prepare an amendment to the SWPPP to identify additional or revised water pollution control practices. The

Contractor shall submit the amendment to the Engineer for review within a time agreed to by the Engineer not to exceed the number of days specified for the initial submittal of the SWPPP. The Engineer will review the amendment within the same time allotted for the review of the initial submittal of the SWPPP.

If directed by the Engineer or requested in writing by the Contractor and approved by the Engineer, changes to the water pollution control work specified in these special provisions will be allowed. Changes may include addition of new water pollution control practices. The Contractor shall incorporate these changes in the SWPPP. Additional water pollution control work will be paid for as extra work in accordance with Section 4-1.03, "Extra work," of the Standard Specifications.

The Contractor shall keep a copy of the approved SWPPP at the job site. The SWPPP shall be made available when requested by a representative of the Regional Water Quality Control Board, State Water Resources Control Board, United States Environmental Protection Agency, or the local storm water management agency. Requests from the public shall be directed to the Engineer.

IMPLEMENTATION REQUIREMENTS

The Contractor shall construct, inspect, maintain, remove, and dispose of the water pollution control practices.

The Contractor's responsibility for SWPPP implementation shall continue throughout any temporary suspension of work ordered in conformance with the provisions in Section 8-1.05, "Temporary Suspension of Work," of the Standard Specifications.

If the Contractor or the Engineer identifies a deficiency in the implementation of the approved SWPPP, the deficiency shall be corrected immediately, unless an agreed date for correction is approved in writing by the Engineer. The deficiency shall be corrected before the onset of precipitation. If the Contractor fails to correct the deficiency by the agreed date or before the onset of precipitation, the Department may correct the deficiency and deduct the cost of correcting deficiencies from payments.

If the Contractor fails to conform to the provisions of this section, "Water Pollution Control," the Engineer may order the suspension of work until the project complies with the requirements of this section.

Year-Round

The Contractor shall monitor the National Weather Service weather forecast on a daily basis during the contract. The Contractor may use an alternative weather forecasting service if approved by the Engineer. Appropriate water pollution control practices shall be in place before precipitation.

The Contractor may discontinue earthwork operations for a disturbed area for up to 21 days and the disturbed soil area will still be considered active. When earthwork operations in the disturbed area have been completed, the Contractor shall implement appropriate water pollution control practices within 15 days, or before predicted precipitation, whichever occurs first.

Rainy Season

The Contractor shall provide soil stabilization and sediment control practices during the rainy season between October 1 and May 1.

During the defined rainy season, the active disturbed soil area of the project site shall be not more than 1 acre. The Engineer may approve expansions of the active disturbed soil area limit if requested in writing. The Contractor shall maintain soil stabilization and sediment control materials on site to protect disturbed soil areas.

INSPECTION AND MAINTENANCE

The WPCM shall inspect the water pollution control practices identified in the SWPPP as follows:

A. Before a forecasted storm,
B. After precipitation that causes site runoff,
C. At 24-hour intervals during extended precipitation,
D. On a predetermined schedule, a minimum of once every month outside of the defined rainy season, and
E. On a predetermined schedule, a minimum of once a week during the defined rainy season.

The WPCM shall oversee the maintenance of the water pollution control practices.

The WPCM shall use the Storm Water Quality Construction Site Inspection Checklist provided in the Preparation Manual or an alternative inspection checklist provided by the Engineer. A copy of the completed site inspection checklist shall be submitted to the Engineer within 24 hours of finishing the inspection.

REPORTING REQUIREMENTS

If the Contractor identifies discharges into surface waters or drainage systems causing or potentially causing pollution, or if the project receives a written notice or order from a regulatory agency, the Contractor shall immediately inform the Engineer. The Contractor shall submit a written report to the Engineer within 7 days of the discharge, notice or order. The report shall include the following information:

A. The date, time, location, nature of the operation, type of discharge; and the cause of the notice or order.
B. The water pollution control practices used before the discharge, or before receiving the notice or order.
C. The date of placement and type of additional or altered water pollution control practices placed after the discharge, or after receiving the notice or order.
D. A maintenance schedule for affected water pollution control practices.

Annual Certifications

By June 15 of each year, the Contractor shall complete and submit to the Engineer an Annual Certification of Compliance, as contained in the Preparation Manual.

PAYMENT

During each estimate period the Contractor fails to conform to the provisions in this section, "Water Pollution Control," or fails to implement the water pollution control practices shown on the plans or specified elsewhere in these special provisions as items of work, the Department will withhold 25 percent of the progress payment.

Withholds for failure to perform water pollution control work will be in addition to all other withholds provided for in the contract. The Department will return performance-failure withholds in the progress payment following the correction of noncompliance.

The contract lump sum price paid for prepare storm water pollution prevention plan shall include full compensation for furnishing all labor, materials, tools, equipment, and incidentals and for doing all the work involved in preparing, obtaining approval of, and amending the SWPPP, as specified in the Standard Specifications and these special provisions, and as directed by the Engineer.

Payments for prepare storm water pollution prevention plan will be made as follows:

A. After the SWPPP has been approved by the Engineer, 75 percent of the contract item price for prepare storm water pollution prevention plan will be included in the monthly progress estimate.
B. After acceptance of the contract in conformance with the provisions in Section 7-1.17, "Acceptance of Contract," of the Standard Specifications, payment for the remaining percentage of the contract item price for prepare storm water pollution prevention plan will be made in conformance with the provisions in Section 9-1.07A, "Payment Prior to Proposed Final Estimate."

Implementation of water pollution control practices in areas outside the highway right of way not specifically provided for in the SWPPP or in these special provisions will not be paid for.

Water pollution control practices for which there are separate contract items of work will be measured and paid for as those contract items of work. Full compensation for all water pollution control practices for which there is no separate contract item of work shall be considered included in the contract lump sum price paid for water pollution control.

10-1.03 CONSTRUCTION SITE MANAGEMENT

Construction site management shall consist of controlling potential sources of water pollution before they come in contact with storm water systems or watercourses. The Contractor shall control material pollution and manage waste and non-storm water existing at the construction site by implementing effective handling, storage, use, and disposal practices.

Attention is directed to "Water Pollution Control" of these special provisions regarding the Contractor's appointment of a water pollution control manager (WPCM) for the project.

The Contractor shall train all employees and subcontractors regarding:

A. Material pollution prevention and control;
B. Waste management;
C. Non-storm water management;
D. Identifying and handling hazardous substances; and
E. Potential dangers to humans and the environment from spills and leaks or exposure to toxic or hazardous substances.

Training shall take place before starting work on this project. New employees shall receive the complete training before starting work on this project. The Contractor shall have regular meetings to discuss and reinforce spill prevention and control; material delivery, storage, use, and disposal; waste management; and non-storm water management procedures.

Instructions for material and waste handling, storage, and spill reporting and cleanup shall be posted at all times in an open, conspicuous, and accessible location at the construction site.

Nonhazardous construction site waste and excess material shall be recycled when practical or disposed of in accordance with the provisions in Section 7-1.13, "Disposal of Material Outside the Highway Right of Way," of the Standard Specifications, unless otherwise specified.

Vehicles and equipment at the construction site shall be inspected by the WPCM on a frequent, predetermined schedule, and by the operator each day of use. Leaks shall be repaired immediately, or the vehicle or equipment shall be removed from the construction site.

SPILL PREVENTION AND CONTROL

The Contractor shall implement spill and leak prevention procedures when chemicals or hazardous substances are stored. Spills of petroleum products; substances listed under CFR Title 40, Parts 110, 117, and 302; and sanitary and septic waste shall be contained and cleaned up as soon as is safe.

Minor spills involve small quantities of oil, gasoline, paint, or other material that can be controlled by the first responder upon discovery of the spill. Cleanup of minor spills includes:

A. Containing the spread of the spill,
B. Recovering the spilled material using absorption,
C. Cleaning the contaminated area, and
D. Disposing of contaminated material promptly and properly.

Semi-significant spills are those that can be controlled by the first responder with the help of other personnel. Cleanup of semi-significant spills shall be immediate. Cleanup of semi-significant spills includes:

A. Containing the spread of the spill;
B. Recovering the spilled material using absorption if the spill occurs on paved or an impermeable surface;
C. Containing the spill with an earthen dike and digging up contaminated soil for disposal if the spill occurs on dirt;
D. Covering the spill with plastic or other material to prevent contaminating runoff if the spill occurs during precipitation; and
E. Disposing of contaminated material promptly and properly.

Significant or hazardous spills are those that cannot be controlled by construction personnel. Notifications of these spills shall be immediate. The following steps shall be taken:

A. Construction personnel shall not attempt to cleanup the spill until qualified staff have arrived;
B. Notify the Engineer and follow up with a written report;

C. Obtain the services of a spills contractor or hazardous material team immediately;
D. Notify the local emergency response team by dialing 911 and county officials at the emergency phone numbers kept on the construction site;
E. Notify the Governor's Office of Emergency Services Warning Center at (805) 852-7550;
F. Notify the National Response Center at (800) 424-8802 regarding spills of Federal reportable quantities in conformance with CFR Title 40, Parts 110, 119, and 302;
G. Notify other agencies as appropriate, including:

1. Fire Department,
2. Public Works Department,
3. Coast Guard,
4. Highway Patrol,
5. City Police or County Sheriff Department,
6 Department of Toxic Substances,
7. California Division of Oil and Gas,
8. Cal OSHA, or
9. Regional Water Resources Control Board.

The WPCM shall oversee and enforce proper spill prevention and control measures. Minor, semi-significant, and significant spills shall be reported to the Contractor's WPCM who shall notify the Engineer immediately.

The Contractor shall prevent spills from entering storm water runoff before and during cleanup. Spills shall not be buried or washed with water.

The Contractor shall keep material or waste storage areas clean, well organized, and equipped with enough cleanup supplies for the material being stored. Plastic shall be placed under paving equipment when not in use to catch drips.

MATERIAL MANAGEMENT

Material shall be delivered, used, and stored for this contract in a manner that minimizes or eliminates discharge of material into the air, storm drain systems, or watercourses.

The Contractor shall implement the practices described in this section when taking delivery of, using, or storing the following materials:

A. Hazardous chemicals including:

1. Acids,
2. Lime,
3. Glues,
4. Adhesives,
5. Paints,
6. Solvents, and
7. Curing compounds;

B. Soil stabilizers and binders;
C. Fertilizers;
D. Detergents;

E. Plaster;
F. Petroleum products including:

   1. Fuel,
   2. Oil, and
   3. Grease;

G. Asphalt components and concrete components; and
H. Pesticides and herbicides.

The Contractor shall supply the Material Safety Data Sheet to the Engineer for material used or stored. The Contractor shall keep an accurate inventory of material delivered and stored at the construction site.

Employees trained in emergency spill cleanup procedures shall be present when hazardous materials or chemicals are unloaded.

The Contractor shall use recycled or less hazardous products when practical.

Application of herbicides and pesticides shall be performed by a licensed applicator. The Contractor shall complete the Report of Chemical Spray forms when spraying herbicides or pesticides, and shall submit a copy to the Engineer before application.

Material Storage

The Contractor shall store liquids, petroleum products, and substances listed in CFR Title 40, Parts 110, 117, and 302 in containers or drums approved by the United States Environmental Protection Agency, and place them in secondary containment facilities.

Secondary containment facilities shall be impervious to the materials stored there for a minimum contact time of 72 hours.

Throughout the rainy season secondary containment facilities shall be covered during non-working days and when precipitation is predicted. Secondary containment facilities shall be adequately ventilated.

The Contractor shall keep the secondary containment facility free of accumulated rainwater or spills. After precipitation, or in the event of spills or leaks, accumulated liquid shall be collected and placed into drums within 24 hours. These liquids shall be handled as hazardous waste in accordance with the provisions in "Hazardous Waste" of these special provisions, unless testing determines them to be nonhazardous.

Incompatible materials, such as chlorine and ammonia, shall not be stored in the same secondary containment facility.

Materials shall be stored in the original containers with the original product labels maintained in legible condition. Damaged or illegible labels shall be replaced immediately.

The secondary containment facility shall have the capacity to contain precipitation from a 24-hour-long, 25-year storm; and 10 percent of the aggregate volume of all containers, or all of the volume of the largest container within the facility, whichever is greater.

The Contractor shall store bagged or boxed material on pallets. Throughout the rainy season, bagged or boxed material shall be protected from wind and rain during non-working days and when precipitation is predicted.

The Contractor shall provide sufficient separation between stored containers to allow for spill cleanup or emergency response access. Storage areas shall be kept clean, well organized, and equipped with cleanup supplies appropriate for the materials being stored.

The Contractor shall repair or replace perimeter controls, containment structures, covers, and liners as needed. Storage areas shall be inspected before and after precipitation, and at least weekly during other times.

Stockpile Management

The Contractor shall reduce or eliminate potential air and water pollution from stockpiled material including soil, paving material, or pressure treated wood. Stockpiles shall be located out of floodplains when possible, and at least 50 feet from concentrated flows of storm water, drainage courses, or inlets unless written approval is obtained from the Engineer.

The Contractor may discontinue adding or removing material for up to 21 days and a stockpile will still be considered active.

The Contractor shall protect active stockpiles with plastic or geotextile cover, soil stabilization measures, or with linear sediment barrier when precipitation is predicted. Active stockpiles of cold mix asphalt concrete shall be placed on an impervious surface and covered with plastic when precipitation is predicted.

The Contractor shall protect inactive soil stockpiles with a plastic or geotextile cover, or with soil stabilization measures at all times during the rainy season. A linear sediment barrier around the perimeter of the stockpile shall also be used. During the non-rainy season soil stockpiles shall be covered and protected with a linear sediment barrier when precipitation is predicted. The Contractor shall control wind erosion during dry weather as provided in Section 10, "Dust Control," of the Standard Specifications.

Stockpiles of portland cement concrete rubble, asphalt concrete, asphalt concrete rubble, aggregate base, or aggregate subbase shall be covered with plastic or geotextile, or protected with a linear sediment barrier at all times during the rainy season, and when precipitation is predicted during the non-rainy season.

Stockpiles of cold mix asphalt concrete shall be placed on and covered with impermeable material at all times during the rainy season, and when precipitation is predicted during the non-rainy season.

Stockpiles of pressure treated wood shall be covered with impermeable material and placed on pallets at all times during the rainy season, and when precipitation is predicted during the non-rainy season.

The Contractor shall repair or replace linear sediment barriers and covers as needed or as directed by the Engineer to keep them functioning properly. Sediment shall be removed when it accumulates to 1/3 of the linear sediment barrier height.

WASTE MANAGEMENT

Solid Waste

The Contractor shall not allow litter or debris to accumulate anywhere on the construction site, including storm drain grates, trash racks, and ditch lines. The Contractor shall pick up and remove trash and debris from the construction site at least once a week. The WPCM shall monitor solid waste storage and disposal procedures on the construction site. The Contractor shall provide enough dumpsters of sufficient size to contain the solid waste generated by the project. Dumpsters shall be emptied when refuse reaches the fill line. Dumpsters shall be

watertight. The Contractor shall not wash out dumpsters on the construction site. The Contractor shall provide additional containers and more frequent pickup during the demolition phase of construction

Solid waste includes:

A. Brick,
B. Mortar,
C. Timber,
D. Metal scraps,
E. Sawdust,
F. Pipe,
G. Electrical cuttings,
H. Non-hazardous equipment parts,
I. Styrofoam and other packaging materials,
J. Vegetative material and plant containers from highway planting, and
K. Litter and smoking material, including litter generated randomly by the public.

Trash receptacles shall be provided and used in the Contractor's yard, field trailers, and locations where workers gather for lunch and breaks.

Hazardous Waste

The Contractor shall implement hazardous waste management practices when waste is generated on the construction site from the following substances:

A. Petroleum products,
B. Asphalt products,
C. Concrete curing compound,
D. Pesticides,
E. Acids,
F. Paints,
G. Stains,
H. Solvents,
I. Wood preservatives,
J. Roofing tar, and
K. Materials classified as hazardous by California Code of Regulations, Title 22, Division 4.5; or listed in CFR Title 40, Parts 110, 117, 261, or 302.

Nothing in these special provisions shall relieve the Contractor of the responsibility for compliance with Federal, State, and local laws regarding storage, handling, transportation, and disposal of hazardous wastes.

The WPCM shall oversee and enforce hazardous waste management practices. Production of hazardous materials and hazardous waste on the construction site shall be kept to a minimum. Perimeter controls, containment structures, covers, and liners shall be repaired or replaced when damaged.

The Contractor shall have a laboratory certified by the Department of Health Services (DHS) sample and test waste when hazardous material levels are unknown to determine safe methods for storage and disposal.

The Contractor shall segregate potentially hazardous waste from nonhazardous waste at the construction site. Hazardous waste shall be handled, stored, and disposed of as required in California Code of Regulations, Title 22, Division 4.5, Section 66262.34; and in CFR Title 49, Parts 261, 262, and 263.

The Contractor shall store hazardous waste in sealed containers constructed and labeled with the contents and date accumulated as required in California Code of Regulations, Title 22, Division 4.5; and in CFR Title 49, Parts 172, 173, 178, and 179. Hazardous waste containers shall be kept in temporary containment facilities conforming to the provisions in "Material Storage" of these special provisions.

There shall be adequate storage volume and containers shall be conveniently located for hazardous waste collection. Containers of hazardous waste shall not be overfilled and hazardous wastes shall not be mixed. Containers of dry waste that are not watertight shall be stored on pallets. The Contractor shall not allow potentially hazardous waste to accumulate on the ground. Hazardous waste shall be stored away from storm drains, watercourses, moving vehicles, and equipment.

The Contractor shall clean water based or oil based paint from brushes or equipment within a contained area and shall not contaminate soil, watercourses, or storm drain systems. Paints, thinners, solvents, residues, and sludges that cannot be recycled or reused shall be disposed of as hazardous waste. When thoroughly dry, latex paint and paint cans, used brushes, rags, absorbent materials, and drop cloths shall be disposed of as solid waste.

The Contractor shall dispose of hazardous waste within 90 days of being generated. Hazardous waste shall be disposed of by a licensed hazardous waste transporter using uniform hazardous waste manifest forms and taken to a Class I Disposal Site. A copy of the manifest shall be provided to the Engineer.

Contaminated Soil

The Contractor shall identify contaminated soil from spills or leaks by noticing discoloration, odors, or differences in soil properties. Soil with evidence of contamination shall be sampled and tested by a laboratory certified by DHS. If levels of contamination are found to be hazardous, the soil shall be handled and disposed of as hazardous waste.

The Contractor shall prevent the flow of water, including ground water, from mixing with contaminated soil by using one or a combination of the following measures:

A. Berms,
B. Cofferdams,
C. Grout curtains,
D. Freeze walls, or
E. Concrete seal course.

If water mixes with contaminated soil and becomes contaminated, the water shall be sampled and tested by a laboratory certified by the DHS. If levels of contamination are found to be hazardous, the water shall be handled and disposed of as hazardous waste.

Concrete Waste

The Contractor shall implement practices to prevent the discharge of portland cement concrete or asphalt concrete waste into storm drain systems or watercourses.

Portland cement concrete or asphalt concrete waste shall be collected at the following locations and disposed of:

A. Where concrete material, including grout, is used;
B. Where concrete dust and debris result from demolition;
C. Where sawcutting, coring, grinding, grooving, or hydro-concrete demolition of portland cement concrete or asphalt concrete creates a residue or slurry; or
D. Where concrete trucks or other concrete-coated equipment is cleaned at the construction site.

Sanitary and Septic Waste

Wastewater from sanitary or septic systems shall not be discharged or buried within the Department right of way. The WPCM shall inspect sanitary or septic waste storage and monitor disposal procedures at least weekly. Sanitary facilities that discharge to the sanitary sewer system shall be properly connected and free from leaks.

The Contractor shall obtain written approval from the local health agency, city, county, and sewer district before discharging from a sanitary or septic system directly into a sanitary sewer system, and provide a copy to the Engineer. The Contractor shall comply with local health agency requirements when using an on-site disposal system.

Liquid Waste

The Contractor shall not allow construction site liquid waste, including the following, to enter storm drain systems or watercourses:

A. Drilling slurries or fluids,
B. Grease-free or oil-free wastewater or rinse water,
C. Dredgings,
D. Liquid waste running off a surface including wash or rinse water, or
E. Other non-storm water liquids not covered by separate permits.

The Contractor shall hold liquid waste in structurally sound, leak proof containers such as:

A. Sediment traps,
B. Roll-off bins, or
C. Portable tanks.

Liquid waste containers shall be of sufficient quantity and volume to prevent spills and leaks. The containers shall be stored at least 50 feet from storm drains, watercourses, moving vehicles, and equipment.

The Contractor shall remove and dispose of deposited solids from sediment traps as provided in "Solid Waste" of these special provisions, unless determined infeasible by the Engineer.

Liquid waste may require testing to determine hazardous material content before disposal.

Drilling fluids and residue shall be disposed of outside the highway right of way. If the Engineer determines that an appropriate location is available, fluids and residue exempt under California Code of Regulations, Title 23, Section 2511(g) may be dried by infiltration and evaporation in a leak proof container. The remaining solid waste may be disposed of as provided in "Solid Waste" of these special provisions.

NON-STORM WATER MANAGEMENT

Water Control and Conservation

The Contractor shall prevent erosion or the discharge of pollutants into storm drain systems or watercourses by managing the water used for construction operations. The Contractor shall obtain the Engineer's approval before washing anything on the construction site with water that could discharge into a storm drain system or watercourse. Discharges shall be reported to the Engineer immediately.

The Contractor shall implement water conservation practices when water is used on the construction site. Irrigation areas shall be inspected and watering schedules shall be adjusted to prevent erosion, excess watering, or runoff. The Contractor shall shut off the water source to broken lines, sprinklers, or valves, and they shall be repaired as soon as possible. When possible, water from waterline flushing shall be reused for landscape irrigation. Paved areas shall be swept and vacuumed, not washed with water.

Construction water runoff, including water from water line repair, shall be directed to areas to infiltrate into the ground and shall not be allowed to enter storm drain systems or watercourses. Spilled water shall not be allowed to escape water truck filling areas. When possible, the Contractor shall direct water from off-site sources around the construction site, or shall minimize contact with the construction site.

Illegal Connection and Discharge Detection and Reporting

The Contractor shall inspect the construction site and the site perimeter before beginning work for evidence of illegal connections, discharges, or dumping. Subsequently, the construction site and perimeter shall be inspected on a frequent, predetermined schedule.

The Contractor shall immediately notify the Engineer when illegal connections, discharges, or dumping are discovered. The Contractor shall take no further action unless directed by the Engineer. Unlabeled or unidentifiable material shall be assumed to be hazardous.

The Contractor shall look for the following evidence of illegal connections, discharges, or dumping:

A. Debris or trash piles,
B. Staining or discoloration on pavement or soils,
C. Pungent odors coming from drainage systems,
D. Discoloration or oily sheen on water,
E. Stains or residue in ditches, channels or drain boxes,
F. Abnormal water flow during dry weather,
G. Excessive sediment deposits,
H. Nonstandard drainage junction structures, or
I. Broken concrete or other disturbances near junction structures.

Vehicle and Equipment Cleaning

The Contractor shall limit vehicle and equipment cleaning or washing on the construction site to that necessary to control vehicle tracking or hazardous waste. Vehicles and equipment shall not be cleaned on the construction site with soap, solvents, or steam until the Engineer has been notified. The resulting waste shall be contained and recycled, or disposed of as provided in "Liquid Waste" or "Hazardous Waste" of these special provisions, whichever is applicable. The Contractor shall not use diesel to clean vehicles or equipment, and shall minimize the use of solvents.

The Contractor shall clean or wash vehicles and equipment in a structure equipped with disposal facilities. If using a structure is not possible, vehicles and equipment shall be cleaned or washed in an outside area with the following characteristics:

A. Located at least 50 feet from storm drainage systems or watercourses,
B. Paved with asphalt concrete or portland cement concrete,
C. Surrounded by a containment berm, and
D. Equipped with a sump to collect and dispose of wash water.

When washing vehicles or equipment with water, the Contractor shall use as little water as possible. Hoses shall be equipped with a positive shutoff valve.

Wash racks shall discharge to a recycle system or to another system approved by the Engineer. Sumps shall be inspected regularly, and liquids and sediments shall be removed as needed.

Vehicle and Equipment Fueling and Maintenance

The Contractor shall fuel or perform maintenance on vehicles and equipment off the construction site whenever practical. When fueling or maintenance must be done at the construction site, the Contractor shall designate a site, or sites, and obtain approval from the Engineer before using. The fueling or maintenance site shall be protected from storm water, shall be on level ground, and shall be located at least 50 feet from drainage inlets or watercourses. The WPCM shall inspect the fueling or maintenance site regularly. Mobile fueling or maintenance shall be kept to a minimum.

The Contractor shall use containment berms or dikes around the fueling and maintenance area. Adequate amounts of absorbent spill cleanup material and spill kits shall be kept in the fueling and maintenance area and on fueling trucks. Spill cleanup material and kits shall be disposed of immediately after use. Drip pans or absorbent pads shall be used during fueling or maintenance unless performed over an impermeable surface.

Fueling or maintenance operations shall not be left unattended. Fueling nozzles shall be equipped with an automatic shutoff control. Vapor recovery fueling nozzles shall be used where required by the Air Quality Management District. Nozzles shall be secured upright when not in use. Fuel tanks shall not be topped-off.

The Contractor shall recycle or properly dispose of used batteries and tires.

Material and Equipment Used Over Water

Drip pans and absorbent pads shall be placed under vehicles or equipment used over water, and an adequate supply of spill cleanup material shall be kept with the vehicle or equipment.

Drip pans or plastic sheeting shall be placed under vehicles or equipment on docks, barges, or other surfaces over water when the vehicle or equipment will be idle for more than one hour.

The Contractor shall provide watertight curbs or toe boards on barges, platforms, docks, or other surfaces over water to contain material, debris, and tools. Material shall be secured to prevent spills or discharge into water due to wind.

Structure Removal Over or Adjacent to Water

The Contractor shall not allow demolished material to enter storm water systems or watercourses. The Contractor shall use covers and platforms approved by the Engineer to collect debris. Attachments shall be used on equipment to catch debris on small demolition operations. Debris catching devices shall be emptied regularly and debris shall be handled as provided in "Waste Management" of these special provisions.

The WPCM shall inspect demolition sites within 50 feet of storm water systems or watercourses every day.

Paving, Sealing, Sawcutting, and Grinding Operations

The Contractor shall prevent the following material from entering storm drain systems or water courses:

A. Cementitious material,
B. Asphaltic material,
C. Aggregate or screenings,
D. Grinding or sawcutting residue,
E. Pavement chunks, or
F. Shoulder backing.

The Contractor shall cover drainage inlets and use linear sediment barriers to protect downhill watercourses until paving, sealing, sawcutting, or grinding operations are completed and excess material has been removed. Drainage inlets and manholes shall be covered during the application of seal coat, tack coat, slurry seal, or fog seal.

During the rainy season or when precipitation is predicted, paving, sawcutting, and grinding operations shall be limited to places where runoff can be captured. Seal coat, tack coat, slurry seal, or fog seal operations shall not begin if precipitation is predicted for the application or the curing period. The Contractor shall not excavate material from existing roadways during precipitation.

The Contractor shall vacuum up slurry from sawcutting operations immediately after the slurry is produced. Slurry shall not be allowed to run onto lanes open to public traffic or off the pavement.

The Contractor shall collect residue from portland cement concrete grinding operations with a vacuum attachment on the grinding machine. The residue shall not be left on the pavement or allowed to flow across the pavement.

Material excavated from existing roadways may be stockpiled as provided in "Stockpile Management" of these special provisions if approved by the Engineer. Asphalt concrete chunks used in embankment shall be placed above the water table and covered by at least one foot of material.

Substances used to coat asphalt trucks and equipment shall not contain soap, foaming agents, or toxic chemicals.

Thermoplastic Striping and Pavement Markers

Thermoplastic striping and preheating equipment shutoff valves shall work properly at all times when on the construction site. The Contractor shall not preheat, transfer, or load thermoplastic within 50 feet of drainage inlets or watercourses. The Contractor shall not fill the preheating container to more than 6 inches from the top. Truck beds shall be cleaned daily of scraps or melted thermoplastic.

The Contractor shall not unload, transfer, or load bituminous material for pavement markers within 50 feet of drainage inlets or watercourses. All pressure shall be released from melting tanks before removing the lid to fill or service. Melting tanks shall not be filled to more than 6 inches from the top.

The Contractor shall collect bituminous material from the roadway after marker removal.

Pile Driving

The Contractor shall keep spill kits and cleanup material at pile driving locations. Pile driving equipment shall be parked over drip pans, absorbent pads, or plastic sheeting where possible. When not in use, pile driving equipment shall be stored at least 50 feet from concentrated flows of storm water, drainage courses, or inlets. The Contractor shall protect pile driving equipment by parking it on plywood and covering it with plastic when precipitation is predicted. The WPCM shall inspect the pile driving area every day for leaks and spills.

The Contractor shall use vegetable oil instead of hydraulic fluid when practical.

Concrete Curing

The Contractor shall not overspray chemical curing compound. Drift shall be minimized by spraying as close to the concrete as possible. Drainage inlets shall be covered before applying curing compound.

The Contractor shall minimize the use and discharge of water by using wet blankets or similar methods to maintain moisture when curing concrete.

Concrete Finishing

The Contractor shall collect and dispose of water and solid waste from high-pressure water blasting. Drainage inlets within 50 feet shall be covered before sandblasting. The nozzle shall be kept as close to the surface of the concrete as possible to minimize drift of dust and blast material. Blast residue may contain hazardous material.

Containment structures for concrete finishing operations shall be inspected for damage before each day of use and before predicted precipitation. Liquid and solid waste shall be removed from the containment structure after each work shift.

PAYMENT

The contract lump sum price paid for construction site management shall include full compensation for furnishing all labor, materials, tools, equipment, and incidentals and for doing all the work involved in spill prevention and control, material management, waste management, non-storm water management, and dewatering and identifying, sampling, testing, handling, and

disposing of hazardous waste, as specified in the Standard Specifications and these special provisions, and as directed by the Engineer.

10-1.04 TEMPORARY FENCE (TYPE ESA)

Temporary fence (Type ESA) shall be furnished, installed, maintained, and later removed in conformance with the details shown on the plans, as specified in these special provisions and as directed by the Engineer.

MATERIALS

Used materials may be installed provided the used materials conform to these special provisions.

High Visibility Fabric

High visibility fabric shall be machine produced, orange colored mesh manufactured from polypropylene or polyethylene. High visibility fabric may be made of recycled materials. Materials shall not contain biodegradable filler materials that can degrade the physical or chemical characteristics of the finished fabric. High visibility fabric shall be fully stabilized ultraviolet resistant, shall be a minimum of 4 feet in width with a maximum mesh opening of 2" x 2". High visibility fabric shall be furnished in one continuous width and shall not be spliced to conform to the specified width dimension.

Posts

Posts for temporary fence (Type ESA) shall be of one of the following:

A. Wood posts shall be fir or pine, shall have a minimum cross section of 2" x 2", and a minimum length of 5.25 feet. The end of the post to be embedded in the soil shall be pointed. Wood posts shall not be treated with wood preservative.
B. Steel posts shall have a "U," "T," "L," or other cross sectional shape that resists failure from lateral loads. Steel posts shall have a minimum weight of 0.75 pounds per linear foot and a minimum length of 5.25 feet. One end of the steel post shall be pointed and the other end shall have a high visibility colored top.

Fasteners

Fasteners for attaching high visibility fabric to the posts shall be as follows:

A. The high visibility fabric shall be attached to wooden posts with commercial quality nails or staples, or as recommended by the manufacturer or supplier.
B. Tie wire or locking plastic fasteners shall be used for attaching the high visibility fabric to steel posts. Maximum spacing of tie wire or fasteners shall be 24 inches along the length of the steel post.

Signs

The sign legend and dimensions shall be as shown on the plans. The sign shall be weatherproof and fade-proof and may include plastic laminated printed paper affixed to an inflexible weatherproof backer board. The sign panel shall be affixed to the high visibility fabric with tie wire or locking plastic fasteners. The top of the sign panel shall be flush with the top of the high visibility fabric. Sign panels shall be placed 100 feet apart along the length of the temporary fence (Type ESA), and at each end of the fence.

INSTALLATION

Temporary fence (Type ESA) shall be installed as follows:

A. All fence construction activities shall be conducted from outside the ESA as shown on the plans or as staked.
B. Posts shall be embedded in the soil a minimum of 16 inches. Post spacing shall be 8 feet maximum from center to center and shall at all times support the fence in a vertical position.
C. Temporary fence (Type ESA) shall be constructed prior to clearing and grubbing work, shall enclose the foliage canopy (drip line) of protected plants, and shall not encroach upon visible roots of the plants.
D. Temporary fence (Type ESA) shall be located so that it is visible, as determined by the Engineer.

When Type ESA temporary fence is no longer required, as determined by the Engineer, the temporary fence shall be removed and disposed of in conformance with the provisions in Section 7-1.13, "Disposal of Material Outside the Highway Right of Way," of the Standard Specifications, except when reused as provided in this section.

Holes caused by the removal of temporary fence (Type ESA) shall be backfilled in conformance with the provisions in Section 15-1.02, "Preservation of Property," of the Standard Specifications.

MAINTENANCE

Temporary fence (Type ESA) that is damaged during the progress of the work shall be repaired or replaced by the Contractor the same day the damage occurs.

MEASUREMENT AND PAYMENT

Temporary fence (Type ESA) shall be measured and paid for in the same manner specified for fence (Type BW or WM, wood or metal posts) as provided in Section 80, "Fences," of the Standard Specifications.

Full compensation for maintaining, removing, and disposing of temporary fence (Type ESA) shall be considered as included in the contract price paid per linear foot for temporary fence (Type ESA) and no additional compensation will be allowed therefor.

10-1.05 COOPERATION

Attention is directed to Section 7-1.14, "Cooperation," and Section 8-1.10, "Utility and Non-Highway Facilities," of the Standard Specifications and these special provisions.

10-1.06 PROGRESS SCHEDULE (CRITICAL PATH METHOD)

The Contractor shall submit to the Engineer practicable critical path method (CPM) progress schedules in conformance with these special provisions. Whenever the term "schedule" is used in this section it shall mean CPM progress schedule.

The provisions in Section 8-1.04, "Progress Schedule," of the Standard Specifications shall not apply.

DEFINITIONS

The following definitions shall apply to this section:

A. ACTIVITY.—A task, event or other project element on a schedule that contributes to completing the project. Activities have a description, start date, finish date, duration and one or more logic ties.
B. BASELINE SCHEDULE.—The initial schedule representing the Contractor's work plan on the first working day of the project.
C. CONTRACT COMPLETION DATE.—The current extended date for completion of the contract shown on the weekly statement of working days furnished by the Engineer in conformance with the provisions in Section 8-1.06, "Time of Completion," of the Standard Specifications.
D. CRITICAL PATH.—The longest continuous chain of activities for the project that has the least amount of total float of all chains. In general, a delay on the critical path will extend the scheduled completion date.
E. CRITICAL PATH METHOD (CPM).—A network based planning technique using activity durations and the relationships between activities to mathematically calculate a schedule for the entire project.
F. DATA DATE.—The day after the date through which a schedule is current. Everything occurring earlier than the data date is "as-built" and everything on or after the data date is "planned."
G. FLOAT.—The difference between the earliest and latest allowable start or finish times for an activity.
H. MILESTONE.—An event activity that has zero duration and is typically used to represent the beginning or end of a certain stage of the project.
I. NEAR CRITICAL PATH.—A chain of activities with total float exceeding that of the critical path but having no more than 10 working days of total float.
J. SCHEDULED COMPLETION DATE.—The planned project finish date shown on the current accepted schedule.
K. TOTAL FLOAT.—The amount of time that an activity or chain of activities can be delayed before extending the scheduled completion date.
L. UPDATE SCHEDULE.—A current schedule developed from the baseline or subsequent schedule through regular monthly review to incorporate as-built progress and any planned changes.

GENERAL REQUIREMENTS

The Contractor shall submit to the Engineer baseline, monthly update and final update schedules, each consistent in all respects with the time and order of work requirements of the contract. The project work shall be executed in the sequence indicated on the current accepted schedule.

Schedules shall show the order in which the Contractor proposes to carry out the work with logical links between time-scaled work activities, and calculations made using the critical path method to determine the controlling operation or operations. The Contractor is responsible for assuring that all activity sequences are logical and that each schedule shows a coordinated plan for complete performance of the work.

The Contractor shall produce schedules using computer software and shall furnish compatible software for the Engineer's exclusive possession and use. The Contractor shall furnish network diagrams and schedule data as parts of each schedule submittal.

Schedules shall include, but not be limited to, applicable activities that show the following:

A. Project characteristics, salient features, or interfaces, including those with outside entities, that could affect time of completion.
B. Project start date, scheduled completion date and other milestones.
C. Work performed by the Contractor, subcontractors and suppliers.
D. Submittal development, delivery, review and approval, including those from the Contractor, subcontractors and suppliers.
E. Procurement, delivery, installation and testing of materials, plants and equipment.
F. Testing and settlement periods.
G. Utility notification and relocation.
H. Erection and removal of falsework and shoring.
I. Major traffic stage switches.
J. Finishing roadway and final cleanup.

Schedule activities shall include the following:

A. A clear and legible description.
B. Start and finish dates.
C. A duration of not less than one working day, except for event activities, and not more than 20 working days, unless otherwise authorized by the Engineer.
D. At least one predecessor and one successor activity, except for project start and finish milestones.
E. Required constraints.

The Engineer's review and acceptance of schedules shall not waive any contract requirements and shall not relieve the Contractor of any obligation thereunder or responsibility for submitting complete and accurate information. Schedules that are rejected shall be corrected by the Contractor and resubmitted to the Engineer within 5 working days of notification by the Engineer, at which time a new review period of one week will begin.

Errors or omissions on schedules shall not relieve the Contractor from finishing all work within the time limit specified for completion of the contract. If, after a schedule has been accepted by the Engineer, either the Contractor or the Engineer discover that any aspect of the

schedule has an error or omission, it shall be corrected by the Contractor on the next update schedule.

COMPUTER SOFTWARE

The Contractor shall submit to the Engineer for approval a description of proposed software before delivery. The software shall be the current version of Primavera SureTrak Project Manager for Windows, or equal, and shall be compatible with Windows NT (version 4.0) operating system. If software other than SureTrak is proposed, it shall be capable of generating files that can be imported into SureTrak.

The Contractor shall furnish schedule software and all original software instruction manuals to the Engineer with submittal of the baseline schedule. The schedule software will be returned to the Contractor within 4 weeks of submittal of the final update schedule. The State will compensate the Contractor in conformance with the provisions in Section 4-1.03D, "Extra Work," of the Standard Specifications for replacement of software which is damaged, lost or stolen after delivery to the Engineer.

NETWORK DIAGRAMS, REPORTS AND DATA

The Contractor shall include the following for each schedule submittal:

A. Two sets of originally plotted, time-scaled network diagrams.
B. One 1.44-megabyte 3.5 inch floppy diskette containing the schedule data.

The time-scaled network diagrams shall conform to the following:

A. Show a continuous flow of information from left to right.
B. Be based on early start and early finish dates of activities.
C. Clearly show the primary paths of criticality using graphical presentation.
D. Be prepared on B-size sheets, 11" x 17", or larger size.
E. Include a title block and a timeline on each page.

BASELINE SCHEDULE

The Contractor shall submit to the Engineer a baseline schedule within 20 working days of approval of the contract. The Contractor shall allow 3 weeks for the Engineer's review after the baseline schedule and all support data are submitted. Beginning the week the baseline schedule is first submitted, the Contractor shall meet with the Engineer weekly to discuss and resolve schedule issues until the baseline schedule is accepted.

The baseline schedule shall include the entire scope of work and shall show how the Contractor plans to complete all work contemplated. The baseline schedule shall show the activities that define the critical path. Multiple critical paths and near-critical paths shall be kept to a minimum. A total of not more than 50 percent of the baseline schedule activities shall be critical or near critical, unless otherwise authorized by the Engineer.

The baseline schedule shall not extend beyond the number of working days originally provided in these special provisions. The baseline schedule shall have a data date of the first working day of the contract and not include any completed work to date. The baseline schedule shall not attribute negative float or negative lag to any activity.

UPDATE SCHEDULE

The Contractor shall submit an update schedule and meet with the Engineer to review contract progress, on or before the first day of each month, beginning one month after the baseline schedule is accepted. The Contractor shall allow 2 weeks for the Engineer's review after the update schedule and all support data are submitted, except that the review period shall not start until any previous month's required schedule is accepted. Update schedules that are not accepted or rejected within the review period will be considered accepted by the Engineer.

The update schedule shall have a data date of the twenty-first day of the month or other date established by the Engineer. The update schedule shall show the status of work actually completed to date and the work yet to be performed as planned. In addition, the update schedule shall show any proposed schedule modifications including adding or deleting activities or changing activity constraints, durations or logic. The Contractor shall state in writing the reasons for any changes to activities and the critical path that result in a delay to the scheduled completion date compared to the previous accepted schedule.

FINAL UPDATE SCHEDULE

The Contractor shall submit a final update, as-built schedule with actual start and finish dates for the activities, within 30 days after completion of contract work. The Contractor shall provide a written certificate with this submittal signed by the Contractor's project manager and an officer of the company stating, "To my knowledge and belief, the enclosed final update schedule reflects the actual start and finish dates of the actual activities for the project contained herein." An officer of the company may delegate in writing the authority to sign the certificate to a responsible manager.

RETENTION

The Department will retain an amount equal to 25 percent of the estimated value of the work performed during each estimate period in which the Contractor fails to submit an acceptable schedule conforming to the requirements of these special provisions as determined by the Engineer. Schedule retentions will be released for payment on the next monthly estimate for partial payment following the date that acceptable schedules are submitted to the Engineer or as otherwise specified herein. Upon completion of all contract work and submittal of the final update schedule and certification, any remaining retained funds associated with this section, "Progress Schedule (Critical Path Method)", will be released for payment. Retentions held in conformance with this section shall be in addition to other retentions provided for in the contract. No interest will be due the Contractor on retention amounts.

PAYMENT

Full compensation for the required schedules and software shall be considered as included in the contract prices paid for the various items of work involved, and no additional compensation will be allowed therefor.

10-1.07 OBSTRUCTIONS

Attention is directed to Section 8-1.10, "Utility and Non-Highway Facilities," and Section 15, "Existing Highway Facilities," of the Standard Specifications and these special provisions.

Attention is directed to the existence of certain underground facilities that may require special precautions be taken by the Contractor to protect the health, safety and welfare of workers and of the public. Facilities requiring special precautions include, but are not limited to: conductors of petroleum products, oxygen, chlorine, and toxic or flammable gases; natural gas in pipelines greater than 6 inches in diameter or pipelines operating at pressures greater than 60 pounds per square inch (gage); underground electric supply system conductors or cables, with potential to ground of more than 300 V, either directly buried or in a duct or conduit which do not have concentric grounded or other effectively grounded metal shields or sheaths.

The Contractor shall notify the Engineer and the appropriate regional notification center for operators of subsurface installations at least 2 working days, but not more than 14 calendar days, prior to performing any excavation or other work close to any underground pipeline, conduit, duct, wire or other structure. Regional notification centers include, but are not limited to, the following:

Notification Center	Telephone Number
Underground Service Alert-Northern California (USA)	(800) 642-2444 (800) 227-2600
Underground Service Alert-Southern California (USA)	(800) 422-4133 (800) 227-2600

If these facilities are not located on the plans in both alignment and elevation, no work shall be performed in the vicinity of the facilities until the owner, or the owner's representative, has located the facility by potholing, probing or other means that will locate and identify the facility. If, in the opinion of the Engineer, the Contractor's operations are delayed or interfered with by reason of the utility facilities not being located by the owner or the owner's representative, the State will compensate the Contractor for the delays to the extent provided in Section 8-1.09, "Right of Way Delays," of the Standard Specifications, and not otherwise, except as provided in Section 8-1.10, "Utility and Non-Highway Facilities," of the Standard Specifications.

It is anticipated that the following utility facilities will be relocated prior to the dates shown:

Utility	Location	Date
PG&E Overhead Power	“A” 1+00 to “A” 50+00	
Starstream Communications	“A” 1+00 to “A” 50+00	

The following utility facilities will be relocated during the progress of the contract. The Contractor shall notify the Engineer, in writing, prior to doing work in the vicinity of the facility. The utility facility will be relocated within the listed working days, as defined in Section 8-1.06, "Time of Completion," of the Standard Specifications, after the notification is received by the Engineer:

Utility	Location	Working Days

Installation of the following utility facilities will require coordination with the Contractor's operations. The Contractor shall make the necessary arrangements with the utility company, through the Engineer, and shall submit a schedule of work, verified by a representative of the utility company, to the Engineer. The schedule of work shall provide not less than the following number of working days, as defined in Section 8-1.06, "Time of Completion," of the Standard Specifications for the utility company to complete their work:

Utility (address)	Location	Working Days

In the event that the utility facilities mentioned above are not removed or relocated by the date specified and, if in the opinion of the Engineer, the Contractor's operations are delayed or interfered with by reason of the utility facilities not being removed or relocated by the date specified, the County will compensate the Contractor for the delays to the extent provided in Section 8-1.09, "Right of Way Delays," of the Standard Specifications, and not otherwise, except as provided in Section 8-1.10, "Utility and Non-Highway Facilities," of the Standard Specifications.

10-1.08 DUST CONTROL

Dust control shall conform to the provisions in Section 10, "Dust Control," of the Standard Specifications, the provisions in the attached Mitigation Monitoring and Reporting Program and these special provisions.

10-1.09 MOBILIZATION

Mobilization shall conform to the provisions in Section 11, "Mobilization," of the Standard Specifications.

10-1.10 CONSTRUCTION AREA TRAFFIC CONTROL DEVICES

Flagging, signs, and temporary traffic control devices furnished, installed, maintained, and removed when no longer required shall conform to the provisions in Section 12, "Construction Area Traffic Control Devices," of the Standard Specifications and these special provisions.

Category 1 temporary traffic control devices are defined as small and lightweight (less than 100 pounds) devices. These devices shall be certified as crashworthy by crash testing, crash testing of similar devices, or years of demonstrable safe performance. Category 1 temporary traffic control devices include traffic cones, plastic drums, portable delineators, and channelizers.

If requested by the Engineer, the Contractor shall provide written self-certification for crashworthiness of Category 1 temporary traffic control devices at least 5 days before beginning any work using the devices or within 2 days after the request if the devices are already in use. Self-certification shall be provided by the manufacturer or Contractor and shall include the following:

A. Date,
B. Federal Aid number (if applicable),
C. Contract number, district, county, route and post mile of project limits,
D. Company name of certifying vendor, street address, city, state and zip code,
E. Printed name, signature and title of certifying person; and
F. Category 1 temporary traffic control devices that will be used on the project.

The Contractor may obtain a standard form for self-certification from the Engineer.

Category 2 temporary traffic control devices are defined as small and lightweight (less than 100 pounds) devices that are not expected to produce significant vehicular velocity change, but may cause potential harm to impacting vehicles. Category 2 temporary traffic control devices include barricades and portable sign supports.

Category 2 temporary traffic control devices shall be on the Federal Highway Administration's (FHWA) list of Acceptable Crashworthy Category 2 Hardware for Work Zones. This list is maintained by FHWA and can be located at:

http://safety.fhwa.dot.gov/roadway_dept/road_hardware/listing.cfm?code=workzone

The Department also maintains this list at:

http://www.dot.ca.gov/hq/traffops/signtech/signdel/pdf/Category2.pdf

Category 2 temporary traffic control devices that have not received FHWA acceptance shall not be used. Category 2 temporary traffic control devices in use that have received FHWA acceptance shall be labeled with the FHWA acceptance letter number and the name of the manufacturer. The label shall be readable and permanently affixed by the manufacturer. Category 2 temporary traffic control devices without a label shall not be used.

If requested by the Engineer, the Contractor shall provide a written list of Category 2 temporary traffic control devices to be used on the project at least 5 days before beginning any work using the devices or within 2 days after the request if the devices are already in use.

Category 3 temporary traffic control devices consist of temporary traffic-handling equipment and devices that weigh 100 pounds or more and are expected to produce significant vehicular velocity change to impacting vehicles. Temporary traffic-handling equipment and devices include crash cushions, truck-mounted attenuators, temporary railing, temporary barrier, and end treatments for temporary railing and barrier.

Type III barricades may be used as sign supports if the barricades have been successfully crash tested, meeting the NCHRP Report 350 criteria, as one unit with a construction area sign attached.

Category 3 temporary traffic control devices shall be shown on the plans or on the Department's Highway Safety Features list. This list is maintained by the Division of Engineering Services and can be found at:

http://www.dot.ca.gov/hq/esc/approved_products_list/HighwaySafe.htm

Category 3 temporary traffic control devices that are not shown on the plans or not listed on the Department's Highway Safety Features list shall not be used.

Full compensation for providing self-certification for crashworthiness of Category 1 temporary traffic control devices and for providing a list of Category 2 temporary traffic control devices used on the project shall be considered as included in the prices paid for the various items of work requiring the use of the Category 1 or Category 2 temporary traffic control devices and no additional compensation will be allowed therefor.

10-1.11 CONSTRUCTION AREA SIGNS

Construction area signs for temporary traffic control shall be furnished, installed, maintained, and removed when no longer required in conformance with the provisions in Section 12, "Construction Area Traffic Control Devices," of the Standard Specifications and these special provisions.

Attention is directed to "Furnish Sign" of these special provisions.

Attention is directed to the provisions in "Prequalified and Tested Signing and Delineation Materials" of these special provisions. Type II retroreflective sheeting shall not be used on construction area sign panels. Type III, IV, VII, VIII, or IX retroreflective sheeting shall be used for stationary mounted construction area sign panels.

Orange background on construction area signs shall be fluorescent orange.

Repair to construction area sign panels will not be allowed, except when approved by the Engineer. At nighttime under vehicular headlight illumination, sign panels that exhibit irregular luminance, shadowing or dark blotches shall be immediately replaced at the Contractor's expense.

The Contractor shall notify the appropriate regional notification center for operators of subsurface installations at least 2 working days, but not more than 14 calendar days, prior to commencing excavation for construction area sign posts. The regional notification centers include, but are not limited to, the following:

Notification Center	Telephone Number
Underground Service Alert-Northern California (USA)	(800) 642-2444 (800) 227-2600
Underground Service Alert-Southern California (USA)	(800) 422-4133

Excavations required to install construction area signs shall be performed by hand methods without the use of power equipment, except that power equipment may be used if it is determined there are no utility facilities in the area of the proposed post holes. The post hole diameter, if backfilled with portland cement concrete, shall be at least 4 inches greater than the longer dimension of the post cross section.

Construction area signs placed within 15 feet from the edge of the travel way shall be mounted on stationary mounted sign supports as specified in "Construction Area Traffic Control Devices" of these special provisions.

The Contractor shall maintain accurate information on construction area signs. Signs that are no longer required shall be immediately covered or removed. Signs that convey inaccurate information shall be immediately replaced or the information shall be corrected. Covers shall be replaced when they no longer cover the signs properly. The Contractor shall immediately restore to the original position and location any sign that is displaced or overturned, from any cause, during the progress of work.

10-1.12 MAINTAINING TRAFFIC

Maintaining traffic shall conform to the provisions in Sections 7-1.08, "Public Convenience," Section 7-1.09, "Public Safety," and Section 12, "Construction Area Traffic Control Devices," of the Standard Specifications, "Public Safety" of these special provisions and these special provisions.

Closure is defined as the closure of a traffic lane or lanes, including shoulder, ramp or connector lanes, within a single traffic control system.

Closures shall conform to the provisions in "Traffic Control System for Lane Closure" of these special provisions.

Lane Closure Restriction for Designated Legal Holidays and Special Days

Thu	Fri	Sat	Sun	Mon	Tues	Wed	Thu	Fri	Sat	Sun
x	**H** xx	xx	xx							
	SD xx									
x	xx	**H** xx	xx							
		SD xx								
	x	xx	**H** xx	xx						
			SD xx							
	x	xx	xx	**H** xx						
	x	xx	xx	**SD** xx						
				x	**H** xx					
				x	**SD** xx					
					x	**H** xx				
						SD xx				
						x	**H** xx	xx		xx
							SD xx			

Legends:

	Refer to lane closure charts
x	The full width of the traveled way shall be open for use by public traffic after 3 p.m.
xx	The full width of the traveled way shall be open for use by public traffic.
H	Designated Legal Holiday
SD	Special Day

Chart No. _
Conventional Highway Lane Requirements

County: Placer | Route/Direction: Auburn Folsom Rd | PM: 0.00 - 1.20

Closure Limits:

FROM HOUR TO HOUR	24	1	2	3	4	5	6	7	8	9	10	11	12	13	14	15	16	17	18	19	20	21	22	23	24
Mondays through Thursdays	N	N	N	N	N	N	S	S	S	R	R	R	R	R	R	R	R	R	N	N	N	N	N	N	
Fridays	N	N	N	N	N	N	S	S	S	R	R	R	R	R	R	N	N	N	N	N	N	N	N	N	
Saturdays	N	N	N	N	N	N	R	R	R	R	R	R	R	R	R	R	R	N	N	N	N	N	N	N	
Sundays	N	N	N	N	N	N	R	R	R	R	R	R	R	R	R	R	R	N	N	N	N	N	N	N	

Legend:

R	Provide at least two through traffic lane, not less than 10 feet in width, for use by both directions of travel
S	Shoulder closure permitted
N	No work permitted.
	Work permitted within project right of way where shoulder or lane closure is not required.

REMARKS:

10-1.13 CLOSURE REQUIREMENTS AND CONDITIONS

Closures shall conform to the provisions in "Maintaining Traffic" of these special provisions and these special provisions.

CLOSURE SCHEDULE

By noon Monday, the Contractor shall submit a written schedule of planned closures for the following week period, defined as Sunday noon through the following Sunday noon. Closures involving work (temporary barrier placement and paving operations) that will reduce horizontal clearances, traveled way inclusive of shoulders, to 2 lanes or less shall be submitted not less than 25 days and not more than 125 days before the anticipated start of operation. Closures involving work (pavement overlay, overhead sign installation, falsework and girder erection) that will reduce the vertical clearances available to the public, shall be submitted not less than 25 days and not more than 125 days before the anticipated start of operation.

The Closure Schedule shall show the locations and times of the proposed closures. The Closure Schedule request forms furnished by the Engineer shall be used. Closure Schedules

submitted to the Engineer with incomplete or inaccurate information will be rejected and returned for correction and resubmittal. The Contractor will be notified of disapproved closures or closures that require coordination with other parties as a condition of approval.

Closure Schedule amendments, including adding additional closures, shall be submitted by noon to the Engineer, in writing, at least 3 business days in advance of a planned closure. Approval of Closure Schedule amendments will be at the discretion of the Engineer.

The Engineer shall be notified of cancelled closures 2 business days before the date of closure.

Closures that are cancelled due to unsuitable weather may be rescheduled at the discretion of the Engineer.

CONTINGENCY PLAN

A detailed contingency plan shall be prepared for reopening closures to public traffic. If required by "Beginning of Work, Time of Completion and Liquidated Damages" of these special provisions, the contingency plan shall be submitted to the Engineer before work at the job site begins. Otherwise, the contingency plan shall be submitted to the Engineer within one business day of the Engineer's request.

LATE REOPENING OF CLOSURES

If a closure is not reopened to public traffic by the specified time, work shall be suspended in conformance with the provisions in Section 8-1.05, "Temporary Suspension of Work," of the Standard Specifications. No further closures are to be made until the Engineer has accepted a work plan, submitted by the Contractor, that will insure that future closures will be reopened to public traffic at the specified time. The Engineer will have 2 business days to accept or reject the Contractor's proposed work plan. The Contractor will not be entitled to compensation for the suspension of work resulting from the late reopening of closures.

COMPENSATION

The Engineer shall be notified of delays in the Contractor's operations due to the following conditions, and if, in the opinion of the Engineer, the Contractor's controlling operation is delayed or interfered with by reason of those conditions, and the Contractor's loss due to that delay could not have been avoided by rescheduling the affected closure or by judicious handling of forces, equipment and plant, the delay will be considered a right of way delay and will be compensated in conformance with the provisions in Section 8-1.09, "Right of Way Delays," of the Standard Specifications:

1. The Contractor's proposed Closure Schedule is denied and his planned closures are within the time frame allowed for closures in "Maintaining Traffic" of these special provisions, except that the Contractor will not be entitled to compensation for amendments to the Closure Schedule that are not approved.
2. The Contractor is denied a confirmed closure.

Should the Engineer direct the Contractor to remove a closure before the time designated in the approved Closure Schedule, delay to the Contractor's schedule due to removal of the closure will be considered a right of way delay and compensation for the delay will be determined in

conformance with the provisions in Section 8-1.09, "Right of Way Delays," of the Standard Specifications.

10-1.14 TRAFFIC CONTROL SYSTEM FOR LANE CLOSURE

A traffic control system shall consist of closing traffic lanes in conformance with the details shown on the plans, the provisions in Section 12, "Construction Area Traffic Control Devices," of the Standard Specifications, the provisions under "Maintaining Traffic" and "Construction Area Signs" of these special provisions, and these special provisions.

The provisions in this section will not relieve the Contractor from the responsibility to provide additional devices or take measures as may be necessary to comply with the provisions in Section 7-1.09, "Public Safety," of the Standard Specifications.

During traffic stripe operations and pavement marker placement operations using bituminous adhesive, traffic shall be controlled, at the option of the Contractor, with either stationary or moving lane closures. During other operations, traffic shall be controlled with stationary lane closures. Attention is directed to the provisions in Section 84-1.04, "Protection From Damage," and Section 85-1.06, "Placement," of the Standard Specifications.

If components in the traffic control system are displaced or cease to operate or function as specified, from any cause, during the progress of the work, the Contractor shall immediately repair the components to the original condition or replace the components and shall restore the components to the original location.

STATIONARY LANE CLOSURE

When lane closures are made for work periods only, at the end of each work period, all components of the traffic control system, except portable delineators placed along open trenches or excavation adjacent to the traveled way, shall be removed from the traveled way and shoulder. If the Contractor so elects, the components may be stored at selected central locations designated by the Engineer within the limits of the highway right of way.

One-way traffic shall be controlled through the project in conformance with the plan entitled "Traffic Control System for Lane Closure on Two Lane Conventional Highways" and these special provisions.

Additional advance flaggers will be required.

When traffic is under one-way control on unpaved areas, the cones shown along the centerline on the plan need not be placed.

Utilizing a pilot car will be at the option of the Contractor. If the Contractor elects to use a pilot car, the cones shown along the centerline on the plan need not be placed. The pilot car shall have radio contact with personnel in the work area. The maximum speed of the pilot car through the traffic control zone shall be 25 miles per hour.

MOVING LANE CLOSURE

Flashing arrow signs used in moving lane closures shall be truck-mounted. Flashing arrow signs shall be in the caution display mode when used on 2-lane highways. Changeable message signs used in moving lane closure operations shall conform to the provisions in Section 12-3.12, "Portable Changeable Message Signs," of the Standard Specifications, except the signs shall be truck-mounted. The full operation height of the bottom of the sign may be less than 7 feet above the ground, but should be as high as practicable.

Truck-mounted attenuators (TMA) for use in moving lane closures shall be any of the following approved models, or equal:

1. Hexfoam TMA Series 3000, Alpha 1000 TMA Series 1000, and Alpha 2001 TMA Series 2001, manufactured by Energy Absorption Systems, Inc., 35 East Wacker Drive, Suite 1100, Chicago, IL 60601:

    1.1. Northern California: Traffic Control Service, Inc., 8585 Thys Court, Sacramento, CA 95828, telephone (800) 884-8274, FAX (916) 387-9734
    1.2. Southern California: Traffic Control Service, Inc., 1818 E. Orangethorpe, Fullerton, CA 92831-5324, telephone (800) 222-8274, FAX (714) 526-9501

2. Cal T–001 Model 2 or Model 3, manufacturer and distributor: Hexcel Corporation, 11711 Dublin Boulevard, P.O. Box 2312, Dublin, CA 94568, telephone (925) 551–4900
3. Renco Rengard Model Nos. CAM 8–815 and RAM 8–815, manufacturer and distributor: Renco Inc., 1582 Pflugerville Loop Road, P.O. Box 730, Pflugerville, TX 78660–0730, telephone (800) 654–8182

Each TMA shall be individually identified with the manufacturer's name, address, TMA model number, and a specific serial number. The names and numbers shall each be a minimum 1/2 inch high and located on the left (street) side at the lower front corner. The TMA shall have a message next to the name and model number in 1/2 inch high letters which states, "The bottom of this TMA shall be _____ inches ± _____ inch above the ground at all points for proper impact performance." A TMA which is damaged or appears to be in poor condition shall not be used unless recertified by the manufacturer. The Engineer shall be the sole judge whether used TMAs supplied under this contract need recertification. Each unit shall be certified by the manufacturer to meet the requirements for TMAs in conformance with the standards established by the Transportation Laboratory.

Approvals for new TMA designs proposed as equal to the above approved models shall be in conformance with the procedures (including crash testing) established by the Transportation Laboratory. For information regarding submittal of new designs for evaluation contact: Transportation Laboratory, 5900 Folsom Boulevard, Sacramento, CA 95819.

New TMAs proposed as equal to approved TMAs or approved TMAs determined by the Engineer to need recertification shall not be used until approved or recertified by the Transportation Laboratory.

PAYMENT

The contract lump sum price paid for traffic control system shall include full compensation for furnishing all labor (except for flagging costs), materials (including signs), tools, equipment, and incidentals, and for doing all the work involved in placing, removing, storing, maintaining, moving to new locations, replacing, and disposing of the components of the traffic control system and for furnishing and operating the pilot car, (including driver, radios, other equipment, and labor required), as shown on the plans, as specified in the Standard Specifications and these special provisions, and as directed by the Engineer. Flagging costs will be paid for as provided in Section 12-2.02, "Flagging Costs," of the Standard Specifications.

The adjustment provisions in Section 4-1.03, "Changes," of the Standard Specifications shall not apply to the item of traffic control system. Adjustments in compensation for traffic control system will be made only for increased or decreased traffic control system required by changes ordered by the Engineer and will be made on the basis of the cost of the increased or decreased traffic control necessary. The adjustment will be made on a force account basis as provided in Section 9-1.03, "Force Account Payment," of the Standard Specifications for increased work, and estimated on the same basis in the case of decreased work.

Traffic control system required by work which is classed as extra work, as provided in Section 4-1.03D of the Standard Specifications, will be paid for as a part of the extra work.

10-1.15 TEMPORARY PAVEMENT DELINEATION

Temporary pavement delineation shall be furnished, placed, maintained, and removed in conformance with the provisions in Section 12-3.01, "General," of the Standard Specifications and these special provisions. Nothing in these special provisions shall be construed as reducing the minimum standards specified in the California MUTCD or as relieving the Contractor from the responsibilities specified in Section 7-1.09, "Public Safety," of the Standard Specifications.

GENERAL

Whenever the work causes obliteration of pavement delineation, temporary or permanent pavement delineation shall be in place prior to opening the traveled way to public traffic. Laneline or centerline pavement delineation shall be provided at all times for traveled ways open to public traffic.

The Contractor shall perform the work necessary to establish the alignment of temporary pavement delineation, including required lines or marks. Surfaces to receive temporary pavement delineation shall be dry and free of dirt and loose material. Temporary pavement delineation shall not be applied over existing pavement delineation or other temporary pavement delineation. Temporary pavement delineation shall be maintained until superseded or replaced with a new pattern of temporary pavement delineation or permanent pavement delineation.

Temporary pavement markers, including underlying adhesive, and removable traffic tape which are applied to the final layer of surfacing or existing pavement to remain in place or which conflicts with a subsequent or new traffic pattern for the area shall be removed when no longer required for the direction of public traffic, as determined by the Engineer.

TEMPORARY LANELINE AND CENTERLINE DELINEATION

Whenever lanelines or centerlines are obliterated and temporary pavement delineation to replace the lines is not shown on the plans, the minimum laneline and centerline delineation to be provided for that area shall be temporary pavement markers placed at longitudinal intervals of not more than 24 feet. The temporary pavement markers shall be the same color as the laneline or centerline the pavement markers replace. Temporary pavement markers shall be, at the option of the Contractor, one of the temporary pavement markers listed for short term day/night use (14 days or less) or long term day/night use (6 months or less) in "Prequalified and Tested Signing and Delineation Materials" of these special provisions. The temporary pavement markers shall be placed in conformance with the manufacturer's instructions. Temporary pavement markers for long term day/night use (6 months or less) shall be cemented to the surfacing with the adhesive recommended by the manufacturer, except epoxy adhesive shall not

be used to place the temporary pavement markers in areas where removal of the temporary pavement markers will be required.

Temporary laneline or centerline delineation consisting entirely of temporary pavement markers listed for short term day/night use (14 days or less), shall be placed on longitudinal intervals of not more than 24 feet and shall be used for a maximum of 14 days on lanes opened to public traffic. Prior to the end of the 14 days the permanent pavement delineation shall be placed. If the permanent pavement delineation is not placed within the 14 days, the Contractor shall replace the temporary pavement markers and provide additional temporary pavement delineation and shall bear the cost thereof. The additional temporary pavement delineation to be provided shall be equivalent to the pattern specified for the permanent pavement delineation for the area, as determined by the Engineer.

Where "no passing" centerline pavement delineation is obliterated, the following "no passing" zone signing shall be installed prior to opening the lanes to public traffic. W20-1 (ROAD WORK AHEAD) signs shall be installed from 1,000 feet to 2,000 feet in advance of "no passing" zones. R4-1 (DO NOT PASS) signs shall be installed at the beginning and at every 2,000-foot interval within "no passing" zones. For continuous zones longer than 2 miles, W7-3a or W71(CA) (NEXT _____ MILES) signs shall be installed beneath the W20-1 signs installed in advance of "no passing" zones. R4-2 (PASS WITH CARE) signs shall be installed at the end of "no passing" zones. The exact location of "no passing" zone signing will be as determined by the Engineer and shall be maintained in place until permanent "no passing" centerline pavement delineation has been applied. The signing for "no passing" zones, shall be removed when no longer required for the direction of public traffic. The signing for "no passing" zones shall conform to the provisions in "Construction Area Signs" of these special provisions, except for payment.

Full compensation for furnishing, placing, maintaining, and removing the temporary pavement markers (including underlying adhesive, layout (dribble) lines to establish alignment of temporary pavement markers or used for temporary laneline and centerline delineation and signing specified for "no passing" zones) for those areas where temporary laneline and centerline delineation is not shown on the plans and for providing equivalent patterns of permanent traffic lines for those areas when required, shall be considered as included in the contract prices paid for the items of work that obliterated the laneline and centerline pavement delineation and no separate payment will be made therefor.

TEMPORARY TRAFFIC STRIPE (PAINT)

Temporary traffic stripe consisting of painted traffic stripe shall be applied and maintained at the locations shown on the plans. The painted temporary traffic stripe shall be complete in place at the location shown prior to opening the traveled way to public traffic. Removal of painted temporary traffic stripe will not be required.

Temporary painted traffic stripe shall conform to the provisions in Section 84-3, "Painted Traffic Stripes And Pavement Markings," of the Standard Specifications, except for payment. At the option of the Contractor, either one or 2 coats shall be applied regardless of whether on new or existing pavement.

At the Contractor's option, temporary removable striping tape listed in "Prequalified and Tested Signing and Delineation Materials" of these special provisions may be used instead of painted temporary traffic stripes. When traffic stripe tape is used in place of painted temporary

traffic stripes, the tape will be measured and paid for by the linear foot as temporary traffic stripe (paint).

When painted traffic stripe is specified for temporary left edgeline delineation, temporary pavement markers placed at longitudinal intervals of not more than 6 feet may be used in place of the temporary painted traffic stripe. Temporary pavement markers shall be one of the types of temporary pavement markers listed for long term day/night use (6 months or less) in "Prequalified and Tested Signing and Delineation Materials" of these special provisions. When temporary reflective pavement markers are used in place of temporary painted traffic stripe, payment for those temporary pavement markers will be made on the basis of the theoretical quantity of temporary traffic stripe (paint) required for the left edgeline the temporary pavement markers replace.

TEMPORARY PAVEMENT MARKING (PAINT)

Temporary pavement marking consisting of painted pavement marking shall be applied and maintained at the locations shown on the plans. The painted temporary pavement marking shall be complete in place at the location shown prior to opening the traveled way to public traffic. Removal of painted temporary pavement marking will not be required.

Temporary painted pavement marking shall conform to the provisions in "Paint Traffic Stripes and Pavement Markings" of these special provisions, except for payment. At the option of the Contractor, either one or 2 coats shall be applied regardless whether on new or existing pavement.

At the Contractor's option, temporary removable pavement marking tape or permanent pavement marking tape listed in "Prequalified and Tested Signing and Delineation Materials" of these special provisions may be used instead of painted temporary pavement markings. When pavement marking tape is used, regardless of which type of tape is placed, the tape will be measured and paid for by the square foot as temporary pavement marking (paint).

MEASUREMENT AND PAYMENT

Temporary traffic stripe (paint) and temporary pavement marking (paint) will be measured and paid for in the same manner specified for paint traffic stripe (1-coat) and paint pavement marking (1-coat) in Section 84-3.06, "Measurement," and Section 84-3.07, "Payment," of the Standard Specifications.

10-1.16 BARRICADE

Barricades shall be furnished, placed and maintained at the locations shown on the plans, specified in the Standard Specifications or in these special provisions or where designated by the Engineer. Barricades shall conform to the provisions in Section 12, "Construction Area Traffic Control Devices," of the Standard Specifications and these special provisions.

Attention is directed to "Prequalified and Tested Signing and Delineation Materials" of these special provisions regarding retroreflective sheeting for barricades.

Barricades shown on the plans as part of a traffic control system will be paid for as provided in "Traffic Control System for Lane Closure" of these special provisions and will not be included in the count for payment of barricades.

10-1.17 PORTABLE CHANGEABLE MESSAGE SIGN

Portable changeable message signs shall be furnished, placed, operated, and maintained at locations shown on the plans or where designated by the Engineer and shall conform to the provisions in Section 12, "Construction Area Traffic Control Devices," of the Standard Specifications and these special provisions. Messages displayed on the portable changeable message signs shall be as specified on the plans and shall conform to Section 12-3.12 "Portable Changeable Message Signs," of the Standard Specifications and “Maintaining Traffic” of these special provisions."

A portable changeable message sign shall be placed in advance of the first warning sign for each stationary lane closure.

The contract lump sum price paid for portable changeable message signs shall include full compensation for furnishing all labor, materials, tools, equipment and incidentals and for doing all the work involved in furnishing, placing, operating, maintaining repairing, transporting from location to location and removing portable changeable message signs, complete in place as specified in the Standard Specifications and these special provisions, as shown in the plans and as directed by the Engineer.

10-1.19 TEMPORARY RAILING

Temporary railing (Type K) shall be placed as shown on the plans, as specified in the Standard Specifications or these special provisions or where ordered by the Engineer and shall conform to the provisions in Section 12, "Construction Area Traffic Control Devices," of the Standard Specifications and these special provisions.

Reflectors on temporary railing (Type K) shall conform to the provisions in "Prequalified and Tested Signing and Delineation Materials" of these special provisions.

Attention is directed to "Public Safety" and "Order of Work" of these special provisions.

Temporary railing (Type K) placed in conformance with the provisions in "Public Safety" of these special provisions will be neither measured nor paid for.

10-1.20 CHANNELIZER

Channelizers shall conform to the provisions in Section 12, "Construction Area Traffic Control Devices," of the Standard Specifications and these special provisions.

Channelizers shall conform to the provisions in "Prequalified and Tested Signing and Delineation Materials" of these special provisions.

When no longer required for the work as determined by the Engineer, channelizers and underlying adhesive used to cement the channelizer bases to the pavement shall be removed. Removed channelizers and adhesive shall become the property of the Contractor and shall be removed from the site of work.

10-1.21 TEMPORARY CRASH CUSHION MODULE

This work shall consist of furnishing, installing, and maintaining sand filled temporary crash cushion modules in groupings or arrays at each location shown on the plans, as specified in these special provisions or where designated by the Engineer. The grouping or array of sand filled modules shall form a complete sand filled temporary crash cushion in conformance with the details shown on the plans and these special provisions.

Attention is directed to "Public Safety", "Order of Work", and "Temporary Railing" of these special provisions.

Whenever the work or the Contractor's operations establishes a fixed obstacle, the exposed fixed obstacle shall be protected with a sand filled temporary crash cushion. The sand filled temporary crash cushion shall be in place prior to opening the lanes adjacent to the fixed obstacle to public traffic.

Sand filled temporary crash cushions shall be maintained in place at each location, including times when work is not actively in progress. Sand filled temporary crash cushions may be removed during a work period for access to the work provided that the exposed fixed obstacle is 15 feet or more from a lane carrying public traffic and the temporary crash cushion is reset to protect the obstacle prior to the end of the work period in which the fixed obstacle was exposed. When no longer required, as determined by the Engineer, sand filled temporary crash cushions shall be removed from the site of the work.

At the Contractor's option, the modules for use in sand filled temporary crash cushions shall be either Energite III Inertial Modules, Fitch Inertial Modules or TrafFix Sand Barrels manufactured after March 31, 1997, or equal:

1. Energite III and Fitch Inertial Modules, manufactured by Energy Absorption Systems, Inc., 35 East Wacker Drive, Suite 1100, Chicago, IL 60601:

    1.1. Northern California: Traffic Control Service, Inc., 8585 Thys Court, Sacramento, CA 95828, telephone (800) 884-8274, FAX (916) 387-9734
    1.2. Southern California: Traffic Control Service, Inc., 1818 E. Orangethorpe, Fullerton, CA 92831-5324, telephone (800) 222-8274, FAX (714) 526-9501

2. TrafFix Sand Barrels, manufactured by TrafFix Devices, Inc., 220 Calle Pintoresco, San Clemente, CA 92672, telephone (949) 361-5663, FAX (949) 361-9205

    2.1. Northern California: United Rentals, Inc., 1533 Berger Drive, San Jose, CA 95112, telephone (408) 287-4303, FAX (408) 287-1929
    2.2. Southern California: Statewide Safety & Sign, Inc., P.O. Box 1440, Pismo Beach, CA 93448, telephone (800) 559-7080, FAX (805) 929-5786

Modules contained in each temporary crash cushion shall be of the same type at each location. The color of the modules shall be the standard yellow color, as furnished by the vendor, with black lids. The modules shall exhibit good workmanship free from structural flaws and objectionable surface defects. The modules need not be new. Good used undamaged modules conforming to color and quality of the types specified herein may be utilized. If used Fitch modules requiring a seal are furnished, the top edge of the seal shall be securely fastened to the wall of the module by a continuous strip of heavy duty tape.

Modules shall be filled with sand in conformance with the manufacturer's directions, and to the sand capacity in pounds for each module shown on the plans. Sand for filling the modules shall be clean washed concrete sand of commercial quality. At the time of placing in the modules, the sand shall contain not more than 7 percent water as determined by California Test 226.

Modules damaged due to the Contractor's operations shall be repaired immediately by the Contractor at the Contractor's expense. Modules damaged beyond repair, as determined by the

Engineer, due to the Contractor's operations shall be removed and replaced by the Contractor at the Contractor's expense.

Temporary crash cushion modules shall be placed on movable pallets or frames conforming to the dimensions shown on the plans. The pallets or frames shall provide a full bearing base beneath the modules. The modules and supporting pallets or frames shall not be moved by sliding or skidding along the pavement or bridge deck.

A Type R or P marker panel shall be attached to the front of the crash cushion as shown on the plans, when the closest point of the crash cushion array is within 12 feet of the traveled way. The marker panel, when required, shall be firmly fastened to the crash cushion with commercial quality hardware or by other methods determined by the Engineer.

At the completion of the project, temporary crash cushion modules, sand filling, pallets or frames, and marker panels shall become the property of the Contractor and shall be removed from the site of the work. Temporary crash cushion modules shall not be installed in the permanent work.

Temporary crash cushion modules will be measured by the unit as determined from the actual count of modules used in the work or ordered by the Engineer at each location. Temporary crash cushion modules placed in conformance with the provisions in "Public Safety" of these special provisions and modules placed in excess of the number specified or shown will not be measured nor paid for.

Repairing modules damaged by public traffic will be paid for as extra work as provided in Section 4-1.03D of the Standard Specifications. Modules damaged beyond repair by public traffic, when ordered by the Engineer, shall be removed and replaced immediately by the Contractor. Modules replaced due to damage by public traffic will be measured and paid for as temporary crash cushion module.

If the Engineer orders a lateral move of the sand filled temporary crash cushions and the repositioning is not shown on the plans, moving the sand filled temporary crash cushion will be paid for as extra work as provided in Section 4-1.03D of the Standard Specifications and these temporary crash cushion modules will not be counted for payment in the new position.

The contract unit price paid for temporary crash cushion module shall include full compensation for furnishing all labor, materials (including sand, pallets or frames and marker panels), tools, equipment, and incidentals, and for doing all the work involved in furnishing, installing, maintaining, moving, and resetting during a work period for access to the work, and removing from the site of the work when no longer required (including those damaged by public traffic) sand filled temporary crash cushion modules, complete in place, as shown on the plans, as specified in the Standard Specifications and these special provisions, and as directed by the Engineer.

10-1.22 EXISTING HIGHWAY FACILITIES

The work performed in connection with various existing highway facilities shall conform to the provisions in Section 15, "Existing Highway Facilities," of the Standard Specifications and these special provisions.

Except as otherwise provided for damaged materials in Section 15-2.04, "Salvage," of the Standard Specifications, the materials to be salvaged shall remain the property of the State, and shall be cleaned, packaged, bundled, tagged, and hauled to the Placer County Corporate Yard located at _____ and stockpiled.The Contractor

shall notify the Engineer and the Corporate Yard, telephone (___) _____-_____ a minimum of 48 hours prior to hauling salvaged material to the Corporate Yard.

REMOVE PAVEMENT MARKER

Existing pavement markers, including underlying adhesive, when no longer required for traffic lane delineation as determined by the Engineer, shall be removed and disposed of.

Full compensation for removing and disposing of pavement markers and underlying adhesive shall be considered as included in the contract price paid per ton for asphalt concrete (Type A) and no separate payment will be made therefor.

REMOVE TRAFFIC STRIPE AND PAVEMENT MARKING

Traffic stripe and pavement marking shall be removed at the locations shown on the plans in conformance with Section 15-5.02B of the Standard Specifications and as directed by the Engineer.

REMOVE DRAINAGE FACILITY

Existing culverts, inlets, headwalls and endwalls, where any portion of these structures is within 3 feet of the grading plane in excavation areas, or within one foot of original ground in embankment areas, or where shown on the plans to be removed, shall be completely removed and disposed of.

Frames and grates shall be removed and reused in the work as shown on the plans.

Full compensation for removing and reusing frames and grates shall be considered as included in the contract price paid for the item of work requiring reuse of the frame and grate.

REMOVE FENCE

Existing wood and barbed wire fencing at the locations shown on the plans to be removed, shall be removed completely and disposed of in conformance with Section 15-2 of the Standard Specifications.

SALVAGE FENCE

Existing wood fence at the locations shown on the plans to be salvaged, shall be removed completely and salvaged in conformance with Section 15-2 of the Standard Specifications and these special provisions.

REMOVE CONCRETE (CURB AND GUTTER)

Curb and gutter at the locations shown on the plans to be removed, shall be removed completely and disposed of in conformance with Section 15-3 of the Standard Specifications.

REMOVE MONUMENT SIGN

Existing monument signs, at those locations shown on the plans to be removed, shall be removed completely, including concrete foundation pad, and disposed of.

Monument sign letters shall be relocated onto the new monument signs.

Existing monument signs shall not be removed until replacement monument signs have been constructed, unless otherwise directed by the Engineer.

Full compensation for salvaging sign letters shall be considered as included in the contract unit price paid for remove monument sign and no separate payment will be made therefor.

REMOVE ROADSIDE SIGN

Existing roadside signs, at those locations shown on the plans to be removed, shall be removed and disposed of.

Sign panels shown on the plans shall be salvaged.

Existing roadside signs shall not be removed until replacement signs have been installed or until the existing signs are no longer required for the direction of public traffic, unless otherwise directed by the Engineer.

Full compensation for salvaging sign panels shall be considered as included in the contract unit price paid for remove roadside sign and no separate payment will be made therefor.

RELOCATE MONUMENT SIGN

Existing monument sign shall be removed, foundations shall be removed and disposed of and sign with mounting hardware relocated to the new location on new foundation where shown on the plans.

Foundation shall consist of concrete spread footing with stone veneer finish as specified elsewhere in these special provisions to match the shape and appearance of the existing sign foundation.

Payment shall be at the contract unit price bid for each relocate sign monument and shall include full compensation for furnishing all labor, material, tools, equipment and incidentals and for doing all work involved in relocating sign monument, including concrete foundation, sign relocation and foundation removal, as shown on the plans, as specified in these Special Provisions and as directed by the Engineer.

Stone veneer shall be measured and paid for as Architectural Finish (Stone Veneer) as specified elsewhere in these special provisions.

RELOCATE ROADSIDE SIGN

Existing roadside signs shall be removed and relocated to the new locations shown on the plans.

Each roadside sign shall be installed at the new location on the same day that the sign is removed from its original location.

ADJUST FRAME AND COVER TO GRADE

Frames and covers of existing manholes, junction structures or other facilities shall be adjusted to grade in conformance with the provisions in Section 15-2.05, "Reconstruction," of the Standard Specifications.

ADJUST FRAME AND GRATE TO GRADE

Frames and grates of existing drainage inlets or other facilities shall be adjusted to grade in conformance with the provisions in Section 15-2.05, "Reconstruction," of the Standard Specifications.

RELOCATE FIRE HYDRANT

This item shall consist of relocating standard fire hydrants at the locations indicated on the plans.

The fire hydrants and their installation shall be as shown on the plans and shall meet the applicable requirements of Sections 15, 19 and 76 of the County General Specifications. The Contractor shall meet the bury depth requirements by use of 45 degree fittings.

Apex Blue, two-way, type BB, reflective pavement markers, or approved equal, shall be placed using Crafco Qwikstix adhesive, or approved equal, for each hydrant installation. In no case shall a marker be placed on a maintenance hole, valve box, lane striping, existing marker, or other road appurtenance.

The reflectors shall be placed 6"-12" from the road centerline adjacent to the hydrant on an imaginary line from the hydrant perpendicular to that centerline. If the road has more than one lane for each direction of traffic, a reflector shall also be placed 6"-12" from the nearest division of traffic lanes to the hydrant, and on an imaginary line from the hydrant perpendicular to that division of lanes. If a hydrant is placed at an intersection, reflectors shall also be placed on all streets adjacent to the hydrant.

All hydrant bonnets shall be painted with OSHA approved safety paint. The color shall be based on the diameter of the main that the hydrant is connected to, as follows:

Red: for 6" or smaller mains
Yellow: for 8"-10" mains
Green: for 12" and larger mains

The nominal diameter for hydrant leads and gate valves shall be 6" for 6" mains, or 8" for 8" and larger mains. Reducers will not be allowed on hydrant leads unless otherwise approved.

A bury line shall be clearly marked on the hydrant barrel per manufacturers recommendations.

The furnishing and placing of the branch lead pipe from the water main to the fire hydrant shall be included with the bid item for the appropriate size water main. Also the furnishing and installing of the fire hydrant gate valves shall be included with the appropriate size gate valve bid item.

The Contractor shall remove existing fire hydrants shown on the plans to be relocated in their entirety and abandon fire hydrant leads in place. The Contractor shall abandon fire hydrant leads my plugging the end with two (2) feet of Class “C” or Class “D” Portland cement concrete

meeting the applicable requirements of the County Standard Specifications. Pipe and appurtenances removed shall become the property of the Contractor and shall be disposed of away from the project site.

The Contractor shall coordinate with the City to prevent interruption of emergency water supply during the removal of existing fire hydrants to be relocated.

Surface restoration associated with this item shall be performed as specified elsewhere in these Special Provisions and paid for under this item. The fire hydrant lead and valve shall be included in the price paid for relocate fire hydrant.

Payment shall be at the contract unit price bid per each for relocate fire hydrant and shall include full compensation for furnishing all labor, material, tools, equipment and incidentals and for doing all work involved in relocate fire hydrant as shown on the Plans, as specified in these Special Provisions and as directed by the Engineer.

REMOVE BASE AND SURFACING

Existing base and bituminous surfacing shown on the plans to be removed, shall be removed to a depth of at least 6 inches below the grade of the existing surfacing. Resulting holes and depressions shall be backfilled with earthy material selected from excavation to the lines and grade established by the Engineer.

The material removed shall be disposed of outside the highway right of way in conformance with the provisions in Section 15-2.03, "Disposal," of the Standard Specifications.

Removing base and surfacing will be measured and paid for as roadway excavation.

EXISTING HIGHWAY IRRIGATION FACILITIES

Existing irrigation facilities within the limits of work shall remain in place. Irrigation facilities that are damaged by the Contractor's operation shall be reported immediately to the Engineer.

Existing below ground irrigation facilities will be marked by the Engineer. Marked Irrigation facilities damaged by the Contractor's operations shall be repaired or replaced at the Contractor's expense. The replacement and repair of damaged unmarked below ground irrigation facilities will be paid for as extra work as provided in Section 4-1.03D,"Extra Work," of the Standard Specifications.

Water shall be maintained in conformance with the provisions in Section 20-5.025, "Maintain Existing Water Supply," of the Standard Specifications.

10-1.23 CLEARING AND GRUBBING

Clearing and grubbing shall conform to the provisions in Section 16, "Clearing and Grubbing," of the Standard Specifications and these special provisions.

Vegetation shall be cleared and grubbed only within the excavation and embankment slope lines.

At locations where there is no grading adjacent to a bridge or other structure, clearing and grubbing of vegetation shall be limited to 5 feet outside the physical limits of the bridge or structure.

Existing vegetation outside the areas to be cleared and grubbed shall be protected from injury or damage resulting from the Contractor's operations.

Activities controlled by the Contractor, except cleanup or other required work, shall be confined within the graded areas of the roadway.

Nothing herein shall be construed as relieving the Contractor of the Contractor's responsibility for final cleanup of the highway as provided in Section 4-1.02, "Final Cleaning Up," of the Standard Specifications.

10-1.24 WATERING

Developing a water supply and applying watering shall conform to the provisions in Section 17, "Watering," of the Standard Specifications and these special provisions.

Full compensation for conforming to the provisions of this section, not otherwise provided for, shall be considered as included in prices paid for the various contract items of work involved and no additional compensation will be allowed therefore.

10-1.25 EARTHWORK

Earthwork shall conform to the provisions in Section 19, "Earthwork," of the Standard Specifications and these special provisions.

Surplus excavated material shall become the property of the Contractor and shall be disposed of in conformance with the provisions in Section 7-1.13, "Disposal of Material Outside the Highway Right of Way," of the Standard Specifications.

Where a portion of the existing surfacing is to be removed, the outline of the area to be removed shall be cut on a neat line with a power-driven saw to a minimum depth of 0.17-foot before removing the surfacing. Full compensation for cutting the existing surfacing shall be considered as included in the contract price paid per cubic yard for roadway excavation and no additional compensation will be allowed therefor.

Reinforcement or metal attached to reinforced concrete rubble placed in embankments shall not protrude above the grading plane. Prior to placement within 2 feet below the grading plane of embankments, reinforcement or metal shall be trimmed to no greater than 3/4 inch from the face of reinforced concrete rubble. Full compensation for trimming reinforcement or metal shall be considered as included in the contract prices paid per cubic yard for the types of excavation shown in the Engineer's estimate, or the contract prices paid for furnishing and placing imported borrow or embankment material, as the case may be, and no additional compensation will be allowed therefor.

At the option of the Contractor, slurry cement backfill conforming to the provisions in Section 19-3.062, "Slurry Cement Backfill," of the Standard Specifications may be used as structure backfill for pipe culverts, including aluminum and aluminum coated pipe culverts.

Imported borrow shall be mineral material including rock, sand, gravel, or earth. The Contractor shall not use man-made refuse in imported borrow including:

A. Portland cement concrete.
B. Asphalt concrete.
C. Material planed from roadway surfaces.
D. Residue from grooving or grinding operations.
E. Metal.

F. Rubber.
G. Mixed debris.
H. Rubble.

The "0.5-foot" dimensions in the fifth paragraph of Section 19-3.08, "Payment," of the Standard Specifications are increased to "one foot" on this project.

10-1.26 ROCK EXCAVATION

Rock excavation consist of presplitting and excavation of rock excavation slopes that can not be excavated by conventional rippable soil excavation methods, in conformance with the provisions in Section 19, "Earthwork," of the Standard Specifications and these special provisions.

Presplitting is defined as the establishment of a free surface or shear plane in rock along the specified excavation slope by the controlled use of explosives and blasting accessories in appropriately aligned and spaced drill holes.

The presplitting technique, as covered herein, shall be used for forming rock excavation slopes at the locations shown on the plans.

The Contractor shall remove overburden soil and weathered rock along the top of the excavation for a distance of at least 50 feet beyond the drilling limits, or to the end of the excavation, before drilling the presplitting holes. Particular care and attention shall be directed to the beginning and end of excavations to ensure removal of overburden soil and weathered rock and to expose fresh rock to an elevation equal to the bottom of the adjacent lift of the presplitting holes being drilled.

Slope holes for presplitting shall be drilled along the line of the planned slope within the tolerances specified herein. The drill holes shall be not less than 2-1/2 inches, and not more than 3 inches in diameter. The Contractor shall control the drilling operations by the use of proper equipment and techniques to ensure that no hole shall deviate from the plane of the planned slope by more than 12 inches nor shall the holes deviate from being parallel to an adjacent hole by more than 67 percent of the planned horizontal spacing between holes.

The length of presplit holes for an individual lift shall not exceed 30 feet, unless the Contractor can demonstrate to the Engineer that the Contractor can stay within the above tolerances and produce a uniform slope. The length of holes may then be increased to a maximum of 60 feet upon written approval of the Engineer.

The spacing of presplit holes shall not exceed 3 feet on centers and shall be adjusted to result in a uniform shear face between holes.

Auxiliary drill holes along the presplit line, not loaded or stemmed, may be ordered by the Engineer. Except for spacing, auxiliary drill holes shall conform to the provisions for presplit holes.

The Contractor shall place the adjacent line of production holes inside the presplit lines in such a manner that avoids damage to the presplit face.

If necessary to reduce shatter and overbreak of the presplit surface, the first line of production holes shall be drilled parallel to the slope line at the top of the cut and at each bench level thereafter.

Blasting techniques that result in damage to the presplit surface shall be immediately discontinued.

No portion of the production holes shall be drilled within 8 feet of a presplit plane except as approved by the Engineer. The bottom of the production holes shall not be lower than the bottom of the presplit holes.

A maximum offset of 24 inches will be permitted for a construction working bench at the bottom of each lift for use in drilling the next lower presplitting pattern.

The Contractor shall adjust the drilling operations to compensate for drift of previous levels and for the offset at the start of new levels to maintain the specified slope plane.

If at times the methods of drilling and blasting do not produce the desired result of a uniform slope and shear face without overbreak, within the tolerances specified, the Contractor shall drill, blast, and excavate in short sections, up to 100 feet, until a technique is arrived at that will produce the desired results.

The maximum diameter of explosives used in presplit holes shall not be greater than 50 percent of the diameter of the presplit hole.

Only standard cartridge explosives prepared and packaged by explosive manufacturing firms shall be used in the presplit holes. These shall either consist of fractional portions of standard cartridges to be affixed to the detonating cord in the field or of solid column explosives joined and affixed to the detonating cord in the field.

If fractional portions of standard explosive cartridges are used, the cartridges shall be firmly affixed to a length of detonating cord equal to the depth of the drill hole so that the cartridges will not slip down the detonating cord nor cock across the hole and bridge the flow of stemming material. Spacing of cartridges along the length of the detonating cord shall not exceed 30 inches center to center and shall be adjusted to give the desired results.

If a solid column type explosive is used, the column shall be assembled and affixed to the detonating cord in conformance with the explosive manufacturer's instructions, a copy of which shall be furnished to the Engineer.

The bottom charge of a presplit hole may be larger than the line charges but shall not be large enough to cause overbreak. The top charge of the presplitting hole shall be placed far enough below the collar to avoid overbreaking the surface.

Before placing the charge, the hole shall be free of obstructions for the hole's entire depth. Necessary precautions shall be exercised so that placing of the charge will not cause caving of material from the walls of the holes.

Stemming may be required by the Engineer whenever necessary to achieve a satisfactory presplit face. Stemming materials shall be dry free-running material 100 percent of which passes a 3/8 inch sieve and 90 percent of which is retained on a No. 8 sieve. Stemmed presplit holes shall be completely filled to the collar.

Charges in each presplitting pattern shall be detonated simultaneously.

The tolerance requirements in Section 19-2.05, "Slopes," of the Standard Specifications shall not apply to presplit surfaces of excavation slopes where presplitting is specified. The presplit face shall not deviate more than one foot from the plane passing through adjacent drill holes, except where the character of the rock is such that, as determined by the Engineer, irregularities are unavoidable. When completed the average plane of the slopes shall conform to the slopes indicated on the plans and no point on the completed slopes shall vary from the designated slopes by more than one foot. These tolerances shall be measured perpendicular to the plane of the slope. No portion of the slope shall encroach on the roadbed.

As long as equally satisfactory presplit slopes are obtained, the Contractor, at the Contractor's option, shall either presplit the slope face before drilling for production blasting or shall presplit

the slope face and production blast at the same time, provided that the presplitting drill holes are fired with zero delay and the production holes are delayed starting at the row of holes farthest from the slope and progressing in steps to the row of holes nearest the presplit line, which row shall be delayed at least 50 milliseconds. In either case, the presplitting holes shall extend either to the end of the excavation or for a distance of not less than 50 feet beyond the limits of the production holes to be detonated.

No compensation will be allowed for rock excavation beyond the limits of excavation shown on the plans. The contract price paid per cubic yard for rock excavation shall include full compensation for furnishing all labor, materials, tools, equipment, and incidentals, and for doing all the work involved in drilling, loading, stemming, and detonating presplit holes and for excavated split rock, as specified in the Standard Specifications and these special provisions and as directed by the Engineer.

10-1.27 SHOULDER BACKING

This work shall consist of constructing shoulder backing adjacent to the edge of new pavement surfacing in conformance with the details shown on the plans and these special provisions.

Material for shoulder backing shall be imported material or material processed from reclaimed portland cement concrete, lean concrete base, cement treated base, or a combination of any of these materials, conforming to the following grading and quality requirements:

Grading Requirements		Quality Requirements		
Sieve Sizes	Percentage Passing	Specification	California Test	Requirement
2"	100	Sand Equivalent	217	10 minimum-30 maximum
1"	75 - 100	Resistance (R-value)	301	50 minimum
No. 4	40 - 60	Percentage Crushed Particles	205	75% minimum
No. 30	12 - 35	Durability Index	229	20 minimum
No. 200	5 - 20			

At the option of the Contractor, aggregate for shoulder backing may consist of material processed from reclaimed asphalt concrete conforming to the following grading and quality requirements:

Grading Requirements		Quality Requirements		
Sieve Sizes	Percentage Passing	Specification	California Test	Requirement
2"	100	Resistance (R-value)	301	50 minimum
3/4"	70 - 100	Percentage Crushed Particles	205	75% minimum
No. 4	30 - 80	Durability Index	229	20 minimum

Coarse aggregate consisting of material retained on the No. 4 sieve, shall consist of material of which at least 75 percent by weight shall be crushed particles with a minimum of two fractured faces, as determined in conformance with California Test 205.

Shoulder backing material shall have a minimum unit weight of 135 pounds per cubic foot as determined in conformance with California Test 212.

Shoulder backing material shall not be treated with lime, cement, or other chemical mixtures.

Shoulder backing material consisting of reclaimed asphalt concrete, shall not be placed within 100 feet measured horizontally of any culvert, watercourse, or bridge within the project limits.

The areas where shoulder backing is to be constructed shall be cleared of weeds, grass, and debris. Removed weeds grass and debris shall be disposed of in conformance with the provisions in Section 7-1.13, "Disposal of Material Outside the Highway Right of Way," of the Standard Specifications.

Prior to placement of shoulder backing material, basement material shall be scarified to a minimum depth of 3 inches. Immediately prior to placement of shoulder backing material, scarified material shall be watered. Shoulder backing material shall be placed, watered, and rolled a minimum of two passes with a steel tired roller weighing not less than 8 tons to form a smooth, compacted surface. Watering shall conform to the provisions in Section 17, "Watering," of the Standard Specifications.

Shoulder backing material shall not be deposited on new pavement surfacing prior to placing the material in the final position, nor shall the material be deposited onto new pavement surfacing during mixing, watering, and blading operations.

Shoulder backing construction shall be completed along the edges of any portion of new pavement surfacing within 5 days after completion of that portion of the new surfacing. Prior to opening a lane adjacent to uncompleted shoulder backing to uncontrolled public traffic, the Contractor shall furnish, place, and maintain portable delineators and W8-9 (LOW SHOULDER) signs off of and adjacent to the new pavement surfacing. Portable delineators shall be placed at the beginning and along the drop-off of the edge of pavement, in the direction of travel, at successive maximum intervals of 500 feet on tangents and 200 feet on curves. W8-9 (LOW SHOULDER) signs shall be placed at the beginning and along the drop-off at successive maximum intervals of 2,000 feet. The portable delineators and W8-9 (LOW SHOULDER) signs shall be maintained in place at each location until the shoulder backing is completed at that location. Portable delineators and signs shall conform to the provisions in Section 12, "Construction Area Traffic Control Devices," of the Standard Specifications, except the signs may be set on temporary portable supports or on barricades.

Quantities of imported material (shoulder backing) will be measured by the cubic yard in conformance with the provisions in Section 9-1.01, "Measurement of Quantities," of the Standard Specifications.

The contract price paid per cubic yard for imported material (shoulder backing) shall include full compensation for furnishing all labor, materials, tools, equipment, and incidentals, and for doing all the work involved in constructing shoulder backing, complete in place, including furnishing, placing, maintaining, and removing portable delineators, W8-9 (LOW SHOULDER) signs, and temporary supports or barricades for the signs, as shown on the plans, as specified in the Standard Specifications and these special provisions, and as directed by the Engineer.

10-1.28 EROSION CONTROL (TYPE D)

Erosion control (Type D) includes applying erosion control materials to embankment and excavation slopes and other areas disturbed by construction activities. Erosion control (Type D) must comply with Section 20-3, "Erosion Control," of the Standard Specifications, these special provisions and the requirements of the attached Mitigation Monitoring and Reporting Program.

If the slope on which the erosion control to be placed is finished during the rainy season as specified under "Water Pollution Control" of these special provisions, apply erosion control to the slope immediately.

Before applying erosion control materials, prepare soil surface under Section 19-2.05, "Slopes," of the Standard Specifications, except that rills and gullies exceeding 2 inches in depth or width must be leveled. Remove vegetative growth, temporary erosion control materials, and other debris from areas to receive erosion control.

MATERIALS

Materials must comply with Section 20-2, "Materials," of the Standard Specifications and these special provisions.

Seed

Seed must comply with Section 20-2.10, "Seed," of the Standard Specifications. Seed not required to be labeled under the California Food and Agricultural Code shall be tested for purity and germination by a seed laboratory certified by the Association of Official Seed Analysts or by a seed technologist certified by the Society of Commercial Seed Technologists. Measure and mix individual seed species in the presence of the Engineer.

Seed must contain at most 1.0 percent total weed seed by weight.

Deliver seed to the job site in unopened separate containers with the seed tag attached. Containers without a seed tag attached are not accepted. The Engineer takes a sample of approximately 1 ounce or 0.25 cup of seed for each seed lot greater than 2 pounds.

Seed must comply with the following:

Seed

Botanical Name (Common Name)	Percent Germination (Minimum)	Pounds Pure Live Seed Per Acre (Slope Measurement)
Lupinus bicolor (Pigmy-leaved Lupine)*	60	2
Trifolium hirtum hykon (Hycon Rose Clover)*	60	8
Nassella pulchra (Purple Needlegrass)*	60	3
Poa scabrella (Pine Bluegrass)*	60	3
Festuca idahoensis (Idaho Fescue)*	80	5
Melica califonica (California Melica)*	40	1
Orthocarpus purpurancens*	40	0.5
Eschscholzia californica (California poppy)*	80	1.5
Sitanion jubatum (Bottlebrush Squirreltail)*	60	1

*Seed produced in California only.

Seed Sampling Supplies

At the time of seed sampling, provide the Engineer a glassine lined bag and custody seal tag for each seed lot sample.

Commercial Fertilizer

Commercial fertilizer shall not be used for Erosion Control (Type D).

Straw

Straw must comply with Section 20-2.06, "Straw," of the Standard Specifications and these special provisions.

Wheat and barley straw must be derived from irrigated crops.

Before delivery of wheat or barley straw to the job site, provide the name, address and telephone number of the grower.

Compost

The compost producer must be fully permitted as specified under the California Integrated Waste Management Board, Local Enforcement Agencies and any other State and Local Agencies that regulate Solid Waste Facilities. If exempt from State permitting requirements, the composting facility must certify that it follows guidelines and procedures for production of compost meeting the environmental health standards of Title 14, California Code of Regulations, Division 7, Chapter 3.1, Article 7.

The compost producer must be a participant in United States Composting Council's Seal of Testing Assurance program.

Compost may be derived from any single, or mixture of any of the following feedstock materials:

1. Green material consisting of chipped, shredded, or ground vegetation; or clean processed recycled wood products
2. Biosolids

Compost feedstock materials to reduce weed seeds, pathogens and deleterious materials as specified under Title 14, California Code of Regulations, Division 7, Chapter 3.1, Article 7, Section 17868.3

Compost must not be derived from mixed municipal solid waste and must be reasonably free of visible contaminates. Compost must not contain paint, petroleum products, pesticides or any other chemical residues harmful to animal life or plant growth. Compost must not possess objectionable odors.

Metal concentrations in compost must not exceed the maximum metal concentrations listed in Title 14, California Code of Regulations, Division 7, Chapter 3.1, Section 17868.2.

Compost must comply with the following:

Physical/Chemical Requirements

Property	Test Method	Requirement
pH	*TMECC 04.11-A, Elastometric pH 1:5 Slurry Method, pH Units	6.0–8.0
Soluble Salts	TMECC 04.10-A, Electrical Conductivity 1:5 Slurry Method dS/m (mmhos/cm)	0-10.0
Moisture Content	TMECC 03.09-A, Total Solids & Moisture at 70+/- 5 deg C, % Wet Weight Basis	N/A
Organic Matter Content	TMECC 05.07-A, Loss-On-Ignition Organic Matter Method (LOI), % Dry Weight Basis	30–65
Maturity	TMECC 05.05-A, Germination and Vigor Seed Emergence Seedling Vigor % Relative to Positive Control	 80 or Above 80 or Above
Stability	TMECC 05.08-B, Carbon Dioxide Evolution Rate mg CO_2-C/g OM per day	8 or below
Particle Size	TMECC 02.02-B Sample Sieving for Aggregate Size Classification % Dry Weight Basis	95% Passing 5/8 inch 70% Passing 3/8 inch
Pathogen	TMECC 07.01-B, Fecal Coliform Bacteria < 1000 MPN/gram dry wt.	Pass
Pathogen	TMECC 07.01-B, Salmonella < 3 MPN/4 grams dry wt.	Pass
Physical Contaminants	TMECC 02.02-C, Man Made Inert Removal and Classification: Plastic, Glass and Metal, % > 4mm fraction	Combined Total: < 1.0
Physical Contaminants	TMECC 02.02-C, Man Made Inert Removal and Classification: Sharps (Sewing needles, straight pins and hypodermic needles), % > 4mm fraction	None Detected

*TMECC refers to "Test Methods for the Examination of Composting and Compost," published by the United States Department of Agriculture and the United States Compost Council (USCC).

Before compost application, provide the Engineer with a copy of the compost producer's compost technical data sheet and a copy of the compost producers Seal of Testing Assurance certification. The compost technical data sheet includes:

1. Laboratory analytical test results
2. Directions for product use
3. List of product ingredients

Before compost application, provide the Engineer with a Certificate of Compliance under Section 6-1.07, "Certificates of Compliance," of the Standard Specifications.

Stabilizing Emulsion

Stabilizing emulsion must comply with Section 20-2.11, "Stabilizing Emulsion," of the Standard Specifications and these special provisions.

Stabilizing emulsion:

1. Must be in a dry powder form
2. Must be a processed organic adhesive used as a soil tackifier
3. May be reemulsifiable

APPLICATION

Apply erosion control materials in separate applications in the following sequence:

1. Apply the following mixture with hydroseeding equipment at the rates indicated within 60 minutes after the seed has been added to the mixture:

Material	Pounds Per Acre (Slope Measurement)
Seed	25
Fiber	200
Compost	800

2. Compost may be dry applied at the total of the rates specified in the preceding table and the following table instead of including it as part of the hydro-seeding operations. In areas where the compost is dry applied, all compost for that area must be applied before the next operation.
3. Apply straw at the rate of 2.0 pounds per acre based on slope measurements. Incorporation of straw will not be required. Distribute straw evenly without clumping or piling.
4. Apply the following mixture with hydro-seeding equipment at the corresponding rates:

Material	Pounds Per Acre (Slope Measurement)
Fiber	200
Compost	800
Stabilizing Emulsion (Solids)	150

The ratio of total water to total stabilizing emulsion in the mixture must be as recommended by the manufacturer.

Once straw work is started in an area, complete stabilizing emulsion applications in that area on the same working day.

The Engineer may change the rates of erosion control materials to meet field conditions.

MEASUREMENT AND PAYMENT

Erosion control (Type D) will be measured by the square yard or by the acre, whichever is designated in the Engineer's Estimate. The area will be calculated on the basis of actual or computed slope measurements.

The contract price paid per square yard or acre for erosion control (Type D) includes full compensation for furnishing all labor, materials, tools, equipment, and incidentals, and for doing all the work involved in applying erosion control (Type D) complete in place, as shown on the plans, as specified in the Standard Specifications and these special provisions, and as directed by the Engineer.

10-1.29 REVEGETATION PLANTING (15 GALLON TREES)

The work performed in connection with revegetation planting shall conform to the provisions in Section 20, "Erosion Control and Highway Planting," of the Standard Specifications, and Highway Planting of these special provisions and the following special provisions.

Contractor shall install 15 gallon native species oak trees at the locations shown on the Revegetation Plans of the Contract Plans. Trees shall be obtained from nurseries that have grown the trees from locally collected seed stock.

The Contractor shall furnish and install materials for a temporary irrigation system as specified elsewhere in these special provisions.

Plant Establishment Work (Revegetation Planting)

The Contractor shall provide an extended plant establishment period for revegetation planting in conformance with 20-4.08 of the Standard Specifications and the following special provisions. Plant establishment work (revegetation planting) shall be Type 2 and shall be for a period of not less than 600 working days.

Attention is directed to "Relief From Maintenance and Responsibility" in these special provisions regarding relief from maintenance and protection.

Commercial fertilizer (granular) shall be applied to trees monthly throughout the Plant Establishment Period. Commercial fertilizer shall be applied at the rate of 5 lbs per 1,000 square feet and shall be spread with a mechanical spreader wherever possible.

Provisions in the Standard Specifications for weed control shall not apply for plant establishment work for revegetation planting.

At the option of the Contractor, plants of a larger container size than those originally specified may be used for replacement plants during the first 125 working days of the plant establishment period. The use of plants of a larger container size than those originally specified for replacement plants shall be at the Contractor's expense. After 125 working days into the plant establishment, Contractor shall arrange an on-site meeting to inspect the condition of the plant material. After 125 working days into the 600 working day Plant Establishment Period, dead plants shall be replaced and the Plant Establishment Period extended 125 days, beyond the scheduled end of the plant establishment period.

During the plant establishment period, if plants become restricted by foliage protectors, the tops of foliage protectors shall be removed. Foliage protectors shall be completely removed, including the support stakes, within 15 working days prior to completion of the plant establishment period.

The final inspection shall be performed in conformance with the provisions in Section 5-1.13, "Final Inspection," of the Standard Specifications and shall be completed a minimum of 20 working days before the estimated completion of the contract.

10-1.30 TEMPORARY IRRIGATION SYSTEM

The Contractor shall construct, maintain, operate and remove a temporary irrigation system for mitigation plantings in conformance with the requirements in Sections 10-1.28, “Maintenance” and 10-1.29,”Planting,” of the Standard Specifications and these Special Provisions.

The work performed in connection with planting and irrigation systems shall conform to the provisions in Section 20, "Erosion Control and Highway Planting," of the Standard Specifications and these Special Provisions.

Irrigation system shall be furnished and installed in accordance with the provisions in Section 20-5, "Irrigation Systems," of the Standard Specifications, except materials containing asbestos fibers shall not be used.

The Contractor shall submit a Temporary Irrigation System Plan including, but not limited to, pipe, insulated backflow preventer, battery operated irrigation controller, valve boxes for controller & valves, valves specifications, to the Engineer at least 3 working days prior to the preconstruction meeting for review, comment, and acceptance. The irrigation system shall be a drip irrigation system, and shall be installed, operated, and maintained by the Contractor for a 2-year period; a third, and subsequent years if necessary, shall be required if plant survivability rates are not met. The Contractor shall be responsible for all costs associated with the third, and subsequent years of maintenance. The above-grade portion of the irrigation system shall be removed upon completion.

Before installation, the temporary irrigation system layout shall be staked by the Contractor to include all locations of the primary irrigation system components for acceptance by the Engineer. Where site conditions do not permit location of piping, valves, or any other aspect of this temporary irrigation system according to the Contractor’s Temporary Irrigation System Plan and these Special Provisions, the Contractor shall contact the Engineer in writing with proposed revision within 24 hours of discovery for acceptance. If any irrigation equipment is installed without the Engineer’s acceptance, it shall be relocated to the Engineer’s direction at the expense of the Contractor.

If the Contractor wishes to use metered water service points off of existing water lines to supply the required irrigation water, the Contractor shall negotiate with Placer County Water Agency (PCWA) and pay all costs associated with the installation of any water meters and for service, including all connection, water bills, and services fees through the two (2) year maintenance period, and any additional years that may be required to meet plant survival requirements. The Contractor shall also pay all costs associated with testing of the insulated backflow preventer, including all testing (pressure, chlorination, water quality, etc.) required throughout the two (2) year maintenance period, and any additional years, if required.

In lieu of or as part of the temporary irrigation system, the Contractor may utilize a water truck to indirectly water the plantings as described herein. The Contractor shall provide a watering plan, which includes, but is not limited to, water truck hook-up points, etc. The Contractor shall be responsible for the water source. The water truck would be used by the

Contractor to supply water to the irrigation system. At no time shall a water truck directly spray water on the plants and at no time shall the plants be damaged by watering operations.

Water service connection shall be according to these Special Provisions, according to PCWA standards (if water service from PCWA is obtained), according to the County Standard Specifications, and according to the direction of the Engineer.

Before ordering materials or proceeding with work, the Contractor shall verify all dimensions and quantities between the Contractor's Temporary Irrigation System Plan, these Special Provisions, and field conditions; any and all discrepancies shall be reported immediately to the Engineer. Work shall be terminated in the area of the discrepancy until the Contractor has provided a written resolution to the conflict to the Engineer. The Contractor shall assume full responsibility for proceeding with work without written acceptance.

The Contractor shall be responsible for verifying site conditions and for being familiar with existing grade conditions, locations of existing features to be preserved, and all existing vegetation. Field adjustments necessary to accommodate or minimize impacts on these conditions shall be done at the Contractor's expense. The Contractor shall coordinate any field adjustments with the Engineer. The Contractor shall contact the Engineer immediately upon finding any field conditions that would conflict with the irrigation design. All field adjustments to the Contractor's accepted Temporary Irrigation System Plan must be accepted by the Engineer before construction of said adjustments; failure to do so before the start of construction shall result in the Contractor assuming full responsibility for any revisions or modifications that are required to provide a fully operational system.

Attention is directed to the requirements specified under "Obstructions" elsewhere in these Special Provisions, regarding work over or adjacent to existing underground facilities. Excavation for proposed irrigation facilities shall not be started until the existing underground facilities have been located.

All materials and equipment delivered to the job site shall be clearly marked to identify the item, materials, class or schedule, and thickness. All materials shall be new, unblemished, and installed according to the Contractor's accepted Temporary Irrigation System Plan and these Special Provisions. All irrigation equipment shall be installed according to manufacturer's specifications, unless otherwise detailed or specified on the plans or in these Special Provisions.

Equipment shall be no less than the sizes shown on the Contractor's accepted Temporary Irrigation System Plan or contained in these Special Provisions.

Materials for irrigation systems shall be commercial quality, unless otherwise specified. No materials or equipment substitutions shall be allowed without written acceptance from the Engineer. The Contractor shall provide to the Engineer a written guarantee against defects in materials and installation for the period in which Temporary Irrigation System is required, in accordance with the requirements specified in these Special Provisions.

The Contractor shall handle all materials professionally and carefully to ensure that irrigation supplies are not damaged during shipping, handling, and storage. All irrigation supplies, including plastic pipe, shall be stored in a manner that prevents damage from sunlight, moisture, or contact with vehicles, equipment, and tools.

The Contractor shall be responsible for having knowledge of all pertinent code requirements before submitting a bid. The Contractor shall obtain and pay for all required permits and observations.

All local, municipal, and state laws, codes, ordinances, and regulations governing or relating to any part of this work are considered a division of these Special Provisions and shall be conformed to by the Contractor. These Special Provisions and the plans shall take precedence whenever they call for a higher quality or larger size than is required by the aforementioned codes, ordinances, and regulations.

The Contractor shall be responsible for conformance to the latest edition of the Uniform Plumbing Code as well as other applicable codes governing the materials and work at this project site.

Manufacturer's specifications shall govern should their directions and detailed plans address information not included in these Special Provisions.

The Contractor shall meet or exceed the minimum qualifications prescribed in Section 10-1.29, "Planting" of these Special Provisions.

Maintenance and establishment of the plants and planting operations shall be according to Section 10-1.28, "Maintenance."

REMOVE EXISTING PLANTS FOR TRENCHING

Trenching alignment shall be adjusted as necessary to avoid damage to any existing trees or shrubs. Removing existing plants for trenching shall conform to the provisions in Section 20-5.026, "Remove Existing Plants for Trenching," of the Standard Specifications, and these Special Provisions.

Removing existing plants for trenching work shall consist of removing and replacing ground cover, pruning trees and shrubs within trench locations, and disposing of removed ground cover and prunings.

Replacement of removed ground cover within the maximum 1.8-m width, as specified in Section 20-5.026, "Remove Existing Plants for Trenching," of the Standard Specifications, will not be required; but the disturbed area shall be re-seeded per Section 10-1.29, "Planting," of these Special Provisions.

Removed ground cover and pruned materials shall be disposed of outside the highway right of way in conformance with the provisions in Section 7-l.13, "Disposal of Material Outside the

Highway Right of Way," of the Standard Specifications. At the Contractor's option, removed ground cover and prunings may be reduced to chips. Chipped materials shall be spread within the County right of way where designated by the Engineer.

Shrubs adjacent to dikes, fences, guard railing, and the edge of pavement within the pruned area designated above, that in the opinion of the Engineer should be removed after pruning, shall be removed and disposed of. Removing and disposing of the shrubs shall be disposed of outside the highway right of way, in conformance with the provisions in Section 7-1.13, “Disposal of Material Outside the Highway Right of Way,” of the Standard Specifications.

In addition to the provisions in Section 20 of the Standard Specifications, work performed in connection with existing planting shall be in conformance with the provisions in Section 15, "Existing Highway Facilities," of the Standard Specifications, and these Special Provisions.

COST BREAKDOWN

The Contractor shall furnish the Engineer a cost breakdown for the contract lump sum item of irrigation system. The cost breakdown table shall be submitted to the Engineer for acceptance within 15 working days after the contract has been approved. The cost breakdown table shall be accepted, in writing, by the Engineer before any partial payment will be made for the item of irrigation system.

The cost breakdown shall be completed and furnished in the format shown in the sample of the cost breakdown included in this section. Line item descriptions of work shall be designated by the Contractor.

The Contractor shall determine the quantities required to complete the work shown on the plans, Contractor’s Temporary Irrigation System Plan, and these Special Provisions. The quantities and their values shall be included in the cost breakdown submitted to the Engineer for acceptance. The Contractor shall be responsible for the accuracy of the quantities and values used in the cost breakdown submitted for acceptance.

The sum of the amounts for the line items of work listed in the cost breakdown table for irrigation system work shall be equal to the contract lump sum price bid for the work. Overhead and profit shall be included in each individual line item of work listed in the cost breakdown table.

No adjustment in compensation will be made in the contract lump sum price paid for irrigation system due to differences between the quantities shown in the cost breakdown table furnished by the Contractor and the quantities required to complete the work as shown on the plans, Contractor’s Temporary Irrigation System Plan, and as specified in these Special Provisions.

TEMPORARY IRRIGATION SYSTEM COST BREAKDOWN

Contract No. 1001

UNIT DESCRIPTION	UNIT	APPROXIMATE QUANTITY	VALUE	AMOUNT
SAMPLE				
(ADD LINES/ROWS AS NEEDED)				

TOTAL _____

Individual line item values in the accepted cost breakdown table shall be used to determine partial payments during the progress of the work and as the basis for calculating an adjustment in compensation for the contract lump sum item of irrigation system due to changes in line items of work ordered by the Engineer. When the total value of ordered changes to line items of work increases or decreases the lump sum price bid for irrigation system by more than 25 percent, the adjustment in compensation will be determined in the same manner specified for increases and decreases in the total pay quantity of an item of work in Section 4-1.03B, "Increased or Decreased Quantities," of the Standard Specifications.

Irrigation system shall be furnished and installed in accordance with the provisions in Section 20-5, "Irrigation Systems," of the Standard Specifications, except materials containing asbestos fibers shall not be used.

The Contractor shall water all revegetation work until the temporary irrigation system is installed and operating. The source of water is the responsibility of the Contractor. The Contractor shall include a Temporary Vegetation Watering Plan and schedule with the Contractor's Temporary Irrigation System Plan submittal to the Engineer for acceptance.

The irrigation system shall maintain the minimum suggested watering schedule of 19 liters of water, twice per week, to each 19-Liter (Five-Gallon) Tree and Tree Pot 4 plant, and 8 liters of water, twice per week, to each Dee Pot (shrub) plant, during the irrigation season as defined in this section, for the first year. Less water shall be applied to the plants during the second and subsequent years, at the Contractor’s discretion and while maintaining the specified survivability rates, so as to wean the plants off of the irrigation system. The Contractor shall be responsible

for irrigating the planting sites as indicated on the plans and meeting the performance standards outlined in Section 10-1.28, “Maintenance,” of these Special Provisions during the irrigation season.

Irrigation season shall be defined as April 1 through October 31 of each year, and at other times as directed by the Engineer.

The Contractor shall be responsible for verifying existing water pressure at each point of connection before ordering materials.

On completion of the installation, the Contractor shall test all aspects of the irrigation system to ensure that it is fully operational.

Before the start of the Maintenance Period, the Contractor shall operate each irrigation system in its entirety for acceptance by the Engineer. Any unacceptable parts of the system shall be repaired within 5 working days after the post-installation observation and reobserved by the Engineer for approval before the start of the Maintenance Period. The Contractor shall be responsible for watering the plant materials by hand or by another watering application accepted by the Engineer during the time that any part of the irrigation system is being repaired and/or not operating.

The work required under this Section shall include all labor, tools, materials, equipment, and incidentals required to construct and complete the temporary irrigation system according to these Special Provisions, as shown on the plans and the Contractor’s Temporary Irrigation System Plan, and as directed by the Engineer.

The Contractor shall maintain the Temporary Irrigation System for a period of two (2) years in accordance with the provisions of Section 10-1.28, "Maintenance," of these Special Provisions. The maintenance period shall be extended for a third and subsequent years, if necessary, if the survivability rates for the plants, specified in Section 10-1.29, “Planting” are not met in the first two years.

MATERIALS

Drain rock shall be ¾-inch pea gravel.

The electrical source for each controller shall be the Contractor’s responsibility. The Contractor shall determine, obtain, and pay for all costs associated with providing a power source for each controller, if required as part of the Contractor’s accepted Temporary Irrigation System Plan.

Pipe supply lines connecting to PCWA facilities shall be in accordance with PCWA requirements.

Plastic pipe supply lines not connecting with PCWA facilities shall be Schedule 40 and shall conform to the requirements of ASTM Designation: D 1785.

Plastic pipe irrigation lines shall be installed not less than 150 mm below the finished grade, measured to the top of the pipe.

Pipe supply lines shall be pressure tested in conformance with the provisions in Section 20-5.03H, "Pressure Testing," of the Standard Specifications, except the pipe (supply line) on the discharge side of the control valve shall be tested by Method B as specified in Section 20-5.03H(2), "Method B," of the Standard Specifications, and shall conform to any PCWA requirements (if service from PCWA is obtained).

Only pipeline trenches and excavation pits for supply lines being supplied from one water service point shall be open at one time. After pressure testing is complete, trenches and pits excavated for pipe supply lines, being supplied from one water service point, shall be backfilled prior to commencing excavations for pipe supply lines being supplied from another water service point.

All pipe sizes indicated on the Contractor's accepted Temporary Irrigation System Plan and specified herein are to be of nominal outside diameter unless otherwise noted. All piping materials shall have the pipe grade, size, class, and manufacturer's name clearly labeled on the outside pipe wall.

The Contractor's attention is directed to Section 10-1.22, "Clearing and Grubbing" and Section 10-1.24, "Earthwork," of these Special Provisions.

Pipeline Assembly:

a. Pipes shall be placed on an even grade in the bottoms of the trenches according to the pipe layout, and pipeline and assembly details on the Contractor's Temporary Irrigation System Plan. The pipe and the trench bottom shall be in continuous contact. The pipes shall be snaked through the trenches to allow for line expansion and contraction. For changes in pipeline depth, 45° elbows shall be used.

b. Pipe fittings shall be high-grade, Schedule 40, unless otherwise specified, PVC solvent-weld conforming to ASTM standards. For threaded joints, only factory-formed threads shall be permitted on PVC pipe fittings.

c. The interior of the pipes shall be kept free of debris, and pipes shall be capped at the end of each day to prevent the entry of foreign matter.

d. Solvent weld joints shall be of commercial quality and made according to manufacturer's specifications for solvent weld piping. Pipes and fittings shall be completely cleaned to be free of dirt, dust, and moisture before installation and the application of primer and solvent cement. Pipelines shall be allowed to set for at least 24 hours before the system is flushed or pressure is applied to the system. After cementing, the pipes and fittings should be held in position for 45 seconds to permit cement to set thoroughly before moving.

e. Pipeline assemblies shall be installed according to the details on the Contractor's Temporary Irrigation System Plan and to the County Standard Specifications. If no detail

or specification is provided, the Contractor shall install the assembly in conformance with standard installation practices.

f. Pipelines placed in common trenches shall have a 300mm minimum diagonal clearance from pipelines of other trades or existing lines

g. Teflon tape shall be used on all threaded fittings.

h. Contractor shall be required to create, install, and ensure water tight joints and connections, and shall be responsible for all costs associated with providing water tight joints and connections.

i. Before installation of the main line pipe, the Contractor shall stake the locations of all main line pipe for acceptance by the Engineer.

j. Lateral lines shall extend from the control valves to the drip irrigation tubing at locations shown and detailed on the Contractor's accepted Temporary Irrigation System Plan, and according to these Special Provisions.

k. Before installation, the Contractor shall stake and mark the locations of the lateral lines for acceptance by the Engineer.

l. The Contractor shall stake the locations of all shut-off valves for acceptance by the Engineer before installation, if required.

m. Shut-off valves shall conform to PCWA requirements for connections to PCWA facilities, if Contractor obtains water service from PCWA.

Water Meter:

a. The Contractor shall stake the location of the water meters for acceptance by the Engineer before installation; if Contractor obtains water service from PCWA, water meters shall conform to PCWA requirements and shall be located at the existing water service points.

b. The Contractor shall make the arrangements and pay the costs and fees required by the serving utility, PCWA. Meters shall conform to County and PCWA (if Contractor obtains water service from PCWA) standards and requirements according to size. The water meters required for this project shall be installed at locations shown on the Contractor's Temporary Irrigation System Plan, according to PCWA standards and requirements (if water service from PCWA is obtained) and as indicated in these Special Provisions. The Contractor shall be responsible for purchasing and coordinating delivery of all meters.

c. The Contractor shall install the water meters according to the County Standard Plans, details, codes, and requirements; and according to PCWA requirements (if Contractor obtains water service from PCWA).

Backflow Preventer:

a. The Contractor shall stake the locations of the backflow preventers for acceptance by the Engineer before installation. The backflow preventers must be located within 1.5 meters of the water meter.

b. Reduced pressure backflow preventers shall conform to PCWA standards (if Contractor obtains water service from PCWA).

c. Backflow preventers shall conform to the provisions in Section 20-2.25, "Backflow Preventers," of the Standard Specifications, PCWA requirements, and these Special Provisions.

d. The backflow preventers shall be installed in conformance to all governing codes; refer to PCWA, County Standard Plans, and specifications for additional installation requirements.

e. At no time shall PVC piping and fittings be used in assembling the backflow preventers.

f. Backflow preventers installed by the Contractor shall be tested for proper operation in conformance with the provisions in Section 20-5.03J, "Check and Test Backflow Preventers," of the Standard Specifications, PCWA requirements, and these Special Provisions. Tests for new backflow preventers shall be satisfactorily completed after installation of the backflow preventer assembly and before operation of the irrigation system. Retesting of backflow preventers after satisfactory completion of the first tests may be required, in order to meet PCWA requirements and these Special Provisions.

Quick-Coupling Valves:

a. The Contractor shall stake the locations of all quick-coupling valves for acceptance by the Engineer before installation.

b. The Contractor shall provide the County with two quick-coupling valve keys of the same manufacture as the quick-coupling valve and of the proper size to fit the specified valves in the Contractor's accepted Temporary Irrigation System Plan, if applicable.

Control Valves:

a. The control valves shall be installed per Contractor's accepted Temporary Irrigation System Plan, and PCWA requirements (if water service from PCWA is obtained).

b. Before installation, the Contractor shall stake the locations of the valves for acceptance by the Engineer.

c. Valves shall be grouped together wherever possible.

d. Valves shall be offset 1 meter from the main line and a minimum of 1 meter from the roadway edges and fences.

e. A Schedule 80 PVC union shall be installed on the downstream end of all control valve assemblies to allow for replacement of the valve.

f. Remote control valves installed in conjunction with battery operated controllers shall be installed with DC-latching solenoids.

Valve Boxes:

a. Valve boxes shall conform to the provisions in Section 20-2.24, "Valve Boxes," of the Standard Specifications, and PCWA requirements, except as otherwise provided herein.

Drip Irrigation System:

a. The drip irrigation system shall be located and constructed as shown and detailed on the Contractor's accepted Temporary Irrigation System Plan, and as described in these Special Provisions.

b. Before installation, the Contractor shall stake and mark the locations of the drip tubing connections to the PVC lateral lines for acceptance by the Engineer.

c. The drip irrigation tubing shall be set on grade from the drip risers to individual plant locations. The individual runs of drip tubing shall be connected to the PVC drip risers, or to PVC tees located along the lateral line pipe as accepted by the Engineer, downstream of the valves and pressure regulators, and snaked, wherever possible, to the individual plant locations. The tubing shall be secured in place with 150mm erosion control staples spaced 3 meters on-center along the entire length of the tubing. Drip tubing and emitters shall be installed after the individual planting sites have been flagged and the planting holes have been excavated.

d. During installation, care shall be taken to prevent kinking of any drip tubing. Any sections of tubing that are damaged or defective shall be removed and replaced, at the Contractor's expense, with new sections of tubing.

e. After its installation is complete, each run of drip tubing shall first be flushed for a minimum of 5 minutes to ensure that debris, rocks, and dirt are removed. The drip tubing lines shall be capped while the system is still operating to ensure that no debris, rocks, or dirt enters the lines. Emitters shall then be installed into the drip tubing. The emitters shall be placed immediately adjacent to the root crown after plant installation. All holes punched into the drip tubing for installation of the emitters and couplers shall be made with hole-punching tools made specifically for this purpose and sized correctly to match the barbed connectors on the emitters and couplers.

f. Drip tubing shall be set on grade at the planting site.

g. Each line shall be checked under pressure for leaks around the emitter or emitter coupler. Any improperly installed emitter shall be moved to a different location and the incorrect hole shall be plugged with drip irrigation tubing plugs. If the hole continues to leak, that portion of the tubing shall be removed and a coupler shall be used to reconnect the lines.

Controller:

a. The Contractor shall stake each controller location for acceptance by the Engineer before installation.

b. The Contractor shall be responsible for all electrical materials, connections from the electrical services to the controllers, and all electrical costs.

c. The Contractor shall provide one controller chart for each controller installed. Each chart shall be waterproof-sealed with plastic laminate and shall fit inside the controller. Each chart shall clearly identify the area controlled and corresponding valve numbers. The charts shall be submitted to the Engineer for acceptance before the Final Acceptance observation.

d. The controller shall be installed according to manufacturer's specifications.

e. The Contractor shall be responsible for connecting all control wires from the valves to the controller.

f. All wires required above ground shall be placed in metal conduits painted flat black.

g. All electrical work shall conform to all governing codes.

Pull Boxes and Conduit:

a. The Contractor shall stake each pull box location for acceptance by the Engineer before installation.

b. Pull boxes shall be installed according manufacturer's specifications.

Control Wires:

a. Control wires shall be set in common trenches with, at the same depth as, and parallel to the main lines. Wiring shall be set at a minimum 150mm distance from pipes.

b. Control wire shall be direct-burial wire, UL listed #14UF.

c. A minimum 450mm expansion loop of control wire shall be provided at all valve locations and at each 90° bend along the main line.

Irrigation Controllers

Irrigation controllers shall be single, solid-state independent controllers conforming to the following:

A. Irrigation controllers shall be fully automatic and shall operate a complete 14-day or longer irrigation program.
B. The watering time of each station shall be displayed on the face of the control panel.

The Contractor shall be responsible for power for irrigation controllers and irrigation controller cabinets, and all associated costs.

Conductors and Pull Boxes

Conductors and pull box installations shall conform to the provisions in Section 20-5.027I, "Conductors, Electrical Conduits and Pull Boxes," of the Standard Specifications.

Any other equipment necessary, including but not limited to pressure reducing valves, pressure relief valves, wye strainers, flush valves, filter and valve assembly units, etc., shall conform to PCWA standards (if water service from PCWA is obtained). The Contractor is responsible for maintaining the functionality of the irrigation system for the life of the contract, including the two year maintenance period, and any subsequent years required to meet the plant survivability standards set forth in Section 10-1.29, "Planting," of these Special Provisions.

IRRIGATION SYSTEM CHECK

Progress observations shall not relieve the Contractor of responsibility for installation in conformance with the Special Provisions, plans, PCWA requirements (if appropriate) and Standard Specifications.

At the Engineer's discretion, work within an area shall not progress until the observation has been completed, corrective work has been performed, if necessary, and the work is accepted, unless otherwise permitted by the Engineer.

The requirements for progress inspections shall not preclude additional inspections of work by the Engineer at other times during the life of the contract.

Materials replacement and corrective actions shall be in strict conformance to PCWA standards (if appropriate) these Special Provisions and according to the Engineer's direction, and shall be completed at the Contractor's expense.

The Contractor shall provide the Engineer with 48 hours advance notification, except as otherwise noted, for required work acceptance observations, including, but not limited to, the following:

A. Field-marked location of all irrigation equipment to be installed.
B. Completed main and lateral line trenching and pressure test.
C. Completed installation and operation of drip irrigation system.
D. Final Acceptance observations (provide 5 working days of advance written notice).

A check of the irrigation facilities shall be performed upon completion of the installation of the temporary irrigation system. The irrigation system check must show that water pressure is being maintained throughout the entire system, and that all plants receive the appropriate amounts of water, as specified in these Special Provisions.

Functional tests for the connections to PCWA facilities, irrigation controllers, and associated automatic irrigation system shall conform to the provisions in Section 20-5.027J, "Testing," of the Standard Specifications, PCWA testing requirements (chlorination, function, etc.), if water service from PCWA is obtained, and these Special Provisions.

The Engineer shall be notified 48 hours in advance of and shall be present for all testing of the irrigation system.

The length of watering cycles using potable water for the final check of irrigation facilities will be determined by the Engineer.

Remote control valves connected to existing and new irrigation controllers shall be checked for automatic performance when the controllers are in automatic mode.

Unsatisfactory performance of irrigation facilities installed or modified by the Contractor shall be repaired and rechecked at the Contractor's expense until satisfactory performance is obtained, as determined by the Engineer.

Nothing in this section "Irrigation System Check" shall relieve the Contractor of full responsibility for making good or repairing defective work or materials found before the formal written acceptance of the entire contract by the Director.

No pipe shall be covered or trenches backfilled until installed pipe has been inspected for installation alignment and quality of work and the installation is accepted by the Engineer. The Contractor shall clean, adjust, and operate the entire system to the satisfaction of the Engineer.

The Contractor shall perform tests as specified and remake all faulty joints. Use of cement or caulking to seal leaks shall not be permitted at any time. The Contractor shall center-load piping with a small amount of backfill to prevent it from arching or slipping under pressure. No pipe joint shall be covered until required testing is completed and the system is accepted by the Engineer.

The Contractor shall provide a force pump and all other required test equipment.

All pipe connections and the individual runs of drip tubing and distribution tubing shall be inspected for leaks. The Engineer shall verify that the drip emitters have been installed adjacent to the root crown of each plant or at each planting site as detailed in these Special Provisions.

If it is determined that the irrigation system or any of its parts or equipment is improperly installed, corrections shall be made by the Contractor, at the Contractor’s expense, to ensure that the system conforms to PCWA standards (if PCWA service is obtained) and these Special Provisions.

Site cleanup shall occur on a daily basis and as each phase of the irrigation system installation concludes. All debris, excess dirt, and extraneous equipment shall be removed off-site according to State and local regulations.

Upon completion of work on the irrigation system, including correction of deficiencies and satisfactory functional tests for the systems involved, the plants to be planted in the area watered by the irrigation system may be planted provided the planting areas have been prepared as specified in these Special Provisions.

Full compensation for checking the irrigation systems shall be considered as included in the contract lump sum price paid for “Temporary Irrigation System” and no additional compensation will be allowed therefore.

Full compensation for watering, Temporary Irrigation System, the Contractor’s Temporary Irrigation System Plan, and the watering schedule shall be considered as included in the contract lump sum price paid for "Temporary Irrigation System", and no additional compensation shall be allowed therefore.

The contract lump sum price paid for "Temporary Irrigation System" shall include full compensation for furnishing all labor, materials, Temporary Irrigation System Plan, tools, equipment, and incidentals, and doing all the work involved in constructing the irrigation system; installing the irrigation system, complete in place; testing and checking the irrigation system; maintaining existing water supply; removing existing plants for trenching; and operating the irrigation system, including any modifications as shown on the Contractor's Temporary Irrigation System Plan, as specified in the Standard Specifications, and these Special Provisions, and as directed by the Engineer. No additional compensation shall be allowed therefore.

10-1.31 IRRIGATION CROSSOVERS

Irrigation crossovers shall conform to the provisions in Section 20-5, "Irrigation Systems," of the Standard Specifications and these special provisions.

Conduits shall be placed in open trenches in conformance with the provisions in Section 20-5.03B, "Conduit for Irrigation Crossovers," of the Standard Specifications.

Conduits shall be alternate conduits and, at the option of the Contractor, shall be one of the following:

A. Bituminous coated corrugated steel pipe,
B. Corrugated aluminum pipe,
C. Acrylonitrile-butadiene-styrene (ABS) composite pipe,
D. Corrugated high density polyethylene (CHDPE) pipe conforming to the requirements in ASTM Designation: F 405 or F 667, or AASHTO Designation: M 252 or M 294 and shall be Type S. Couplings and fittings for CHDPE pipe shall be as recommended by the pipe manufacturer.

10-1.32 DECOMPOSED GRANITE

Decomposed granite work shall consist of furnishing and placing decomposed granite, including site preparation and edging, as shown on the plans and in conformance with these special provisions, and as directed by the Engineer.

MATERIALS

Decomposed Granite

Decomposed granite shall consist of any granitoid igneous rock, which has been weathered in place, which has as principal constituents, granular fragments of quartz and feldspar, and shall conform to the following requirements:

Grading Requirements

Sieve Size	Percent Passing
3/8”	100
No. 4	85-95
No. 8	65-80
No. 16	20-60
No. 100	5-15

The color of decomposed granite shall be tan-gold.

The Contractor shall submit a 5 pound sample of decomposed granite to the Engineer for approval prior to delivery of material to the site.

Weed Control Mat

Weed control mat shall be manufactured from thermally spun bonded polypropylene fabric and shall conform to the following:

Specification	Minimum Requirement

Thickness	N/A
Grab Tensile Strength	130 lbs
Grab Elongation	60%
Puncture	40 lbs
Trap Tear	60 lbs
Width	12 to 15 feet
Mullen Burst	140 psi
UV Resistance	70% @ 150 hours
Permeability	N/A

Solidifying Emulsion

Solidifying emulsion shall be a water based polymer, specifically manufactured to harden gravel or soil. The solidifying emulsion shall not alter the gravel color. A sample of the solidifying emulsion shall be submitted to the Engineer for approval prior to mixing.

SITE PREPARATION

Prior to placing the decomposed granite, the areas to receive the decomposed granite shall be cleared as specified under "Roadside Clearing" in these special provisions.

Earthwork shall conform to the provisions in Section 19, "Earthwork," of the Standard Specifications and these special provisions.

After clearing, the areas to receive decomposed granite shall be excavated to the depth shown on the plans, graded to a smooth surface, compacted to not less than 90% relative compaction.

Surplus excavated material shall become the property of the Contractor and shall be disposed of outside the highway right of way in conformance with the provisions in Section 7-1.13, "Disposal of Material Outside the Highway Right of Way," of the Standard Specifications.

Following compaction, the soil shall be scarified to a depth of 1-1/2 inches and treated with dichlobenil, applied in conformance with Section 20-4.026, "Pesticides," of the Standard Specification and the manufacturer's specifications. Pesticides shall not be applied more than 8 hours prior to applying decomposed granite. Pesticides shall be applied with a device approved by the Engineer and shall not be applied more than one foot beyond the areas to receive decomposed granite.

PLACEMENT

Edging shall be installed to delineate the limits of the decomposed granite areas as shown on the plans and as specified in these special provisions.

Solidifying emulsion and decomposed granite shall be mixed per manufacturer's recommendations and compacted in two layers of 1-1/2 inch lifts compacted to a 3 inch depth.

Decomposed granite shall be raked to evenly blend the different gradation sizes and graded to form a smooth uniform surface. At the time the decomposed granite is spread the moisture content shall be sufficient to obtain the required compaction, and shall be uniformly distributed throughout the material. The relative compaction shall be not less than 90 percent.

Decomposed granite areas shall receive a final application of solidifying emulsion as recommended by the manufacturer. Care shall be taken to prevent overspray or runoff onto adjacent paved and planting areas.

When placement is complete the surface shall be smooth and uniform; maintaining original flow lines, slope gradient and contours of the project site.

MEASUREMENT AND PAYMENT

Decomposed granite will be measured by the cubic yard as determined from actual measurements made parallel to the ground slope.

The contract price paid per cubic yard for decomposed granite shall include full compensation for furnishing all labor, materials, tools, equipment, and incidentals, and for doing all the work involved in providing and placing decomposed granite, complete in place, as shown on the plans, as specified in the Standard Specifications and these special provisions, and as directed by the Engineer.

10-1.33 AGGREGATE BASE

Aggregate base shall be Class 2 and shall conform to the provisions in Section 26, "Aggregate Bases," of the Standard Specifications and these special provisions.

The restriction that the amount of reclaimed material included in Class 2 aggregate base not exceed 50 percent of the total volume of the aggregate used shall not apply. Aggregate for Class 2 aggregate base may include reclaimed glass. Aggregate base incorporating reclaimed glass shall not be placed at locations where surfacing will not be placed over the aggregate base.

10-1.34 ASPHALT CONCRETE

GENERAL

Asphalt concrete shall be Type A or open graded asphalt as shown on the plans and shall conform to the provisions in Section 39, "Asphalt Concrete," of the Standard Specifications and these special provisions.

Open graded asphalt concrete may be placed when the atmospheric temperature is below 70° F, but above 55° F, provided the following requirements are met:

A. The aggregate grading shall be 1/2-inch maximum.
B. Open graded asphalt concrete shall not be placed in a windrow or stockpile. Open graded asphalt concrete shall be transferred directly from the hauling vehicle to the asphalt paver hopper.
C. Open graded asphalt concrete shall be not less than 0.10-foot in compacted thickness.
D. Immediately before adding the asphalt binder to the open graded asphalt concrete mixture, the temperature of the aggregate shall be not more than 275° F. Open graded asphalt concrete shall be spread at a temperature of not less than 220° F measured in the hopper in the asphalt paver.
E. The compaction operation shall be such that the maximum distance between the asphalt paver and the initial breakdown rolling shall be no greater than 50 feet.

F. During the placement of open graded asphalt concrete, the speed of the asphalt paver shall not exceed 33 feet per minute.
G. The Contractor shall cover loads of open graded asphalt concrete with tarpaulins. The tarpaulins shall completely cover exposed open graded asphalt concrete in the hauling vehicle until the open graded asphalt concrete has been completely transferred into the asphalt paver hopper.

The asphalt content of the asphalt mixture will be determined in conformance with the requirements in California Test 379, or in conformance with the requirements in California Test 382.

The amount of asphalt binder used in asphalt concrete placed in dikes, gutters, gutter flares, overside drains and aprons at the ends of drainage structures shall be increased one percent by weight of the aggregate over the amount of asphalt binder determined for use in asphalt concrete placed on the traveled way.

RECLAIMED ASPHALT PAVEMENT

The Contractor may produce asphalt concrete using reclaimed asphalt pavement (RAP). Asphalt concrete produced using RAP shall conform to the provisions for asphalt concrete in this section, "Asphalt Concrete," and these special provisions. The Contractor may substitute RAP for a portion of the virgin aggregate in asphalt concrete in an amount not exceeding 15 percent of the asphalt concrete dry aggregate mass.

RAP shall be processed from asphalt concrete removed from pavement surfaces. RAP shall be stored in stockpiles on smooth surfaces free of debris and organic material. RAP stockpiles shall consist only of homogeneous RAP. The Contractor may process and stockpile RAP throughout the project's life. Processing and stockpiling operations shall prevent material contamination and segregation.

The Contractor shall determine the amount of asphalt binder to be mixed with the combined virgin aggregate and RAP in conformance with the requirements in California Test 367 amended by Lab Procedure-9 (LP-9), "Hot Mix Asphalt (HMA) Using Up To 15% Reclaimed Asphalt Pavement (RAP)." LP-9 is available at:

http://www.dot.ca.gov/hq/esc/Translab/fpmlab.htm

At least 21 days before starting production of asphalt concrete using RAP, the Contractor shall submit a proposed asphalt concrete mix design in writing to the Engineer. The mix design submittal shall consist of the following:

A. RAP:

1. Processed stockpile locations.
2. LP-9 test results.
3. Correlation factor for aggregate gradations from California Test 382 and LP-9.
4. Three 70-pound samples of processed RAP representing the material to be used. The three samples shall be split from the sample the Contractor uses to determine the mix design. The Contractor shall obtain and split the samples in conformance with the requirements in California Test 125 and LP-9.

5. The substitution rate for virgin aggregate and percent RAP.

B. Virgin aggregate and supplemental fine aggregate blend:

1. Percent passing values for each sieve size.
2. Aggregate quality tests results.
3. Each aggregate source to be used including producer, location, and California Mine Identification number.
4. Percentage of each aggregate stockpile, cold feed, and hot bin to be used.
5. Gradation of each aggregate stockpile, cold feed, and hot bin to be used.

C. Asphalt binder:

1. Source.
2. Material Safety Data Sheets.

D. Antistrip additives**,** if used:

1. Name of product.
2. Name of manufacturer.
3. Manufacturer's designation and proposed rate.
4. Location and method of addition.
5. Material Safety Data Sheets.

E. Asphalt concrete:

1. A completed mix design that reflects the percent of RAP to be used including the electronic worksheet identified in LP-9.
2. In graphical format, stability and air voids versus asphalt binder percentage of asphalt in conformance with the requirements in CTM 367.

Asphalt concrete production using RAP shall not begin until the Engineer approves the mix design. If the Engineer fails to review the mix design in 21 days, and if, in the opinion of the Engineer, work completion is delayed as a result of the failure to review, the Engineer will adjust payment and contract time in conformance with the requirements in Section 8-1.09, "Right of Way Delays," of the Standard Specifications.

If proposing a change in the RAP substitution rate, the Contractor shall notify the Engineer. If the substitution rate changes more than 5 percent by dry aggregate mass in the asphalt concrete mixture, the Contractor shall submit a new mix design.

The aggregate gradation for the asphalt concrete produced with RAP shall be calculated based on the mathematical combination of the virgin aggregate gradation during production and the daily RAP gradation. RAP shall be sampled and gradation shall be determined in conformance with the requirements in LP-9. RAP gradations shall be:

A. Determined daily by the Contractor.
B. Used for the mathematical combination of that day's asphalt concrete production.

C. Reported to the Engineer.

The Contractor shall perform quality control testing of the RAP source each day asphalt concrete using RAP is produced.

The Contractor shall perform quality control testing of the aggregates and the asphalt concrete mixture at least once for every 1,000 tons of asphalt concrete using RAP produced, but not less than 2 tests per day.

Daily, the Contractor shall submit to the Engineer:

A. Results for RAP gradation and the asphalt binder content in RAP determined in conformance with the requirements in LP-9.
B. Mathematical calculation of the gradation of the virgin aggregate and RAP aggregate blend.
C. Correlation factor for RAP burn-off determined in conformance with the requirements in LP-9.

RAP proportioning shall conform to the provisions for aggregate proportioning specified in Section 39-3.03, "Proportioning," of the Standard Specifications and these special provisions. The Contractor's mixing equipment shall have a device that safely provides a sample representative of the virgin aggregate and RAP incorporated into the asphalt concrete. The Contractor shall sample in conformance with the requirements in California Test 125 and LP-9.

The temperature of asphalt concrete using RAP shall not exceed 330° F.

If batch mixing is used, RAP shall be kept separate from the virgin aggregate until both ingredients enter the weighhopper or pugmill. After introduction to the pugmill and before asphalt binder is added, the mixing time for the virgin aggregate and RAP shall not be less than 5 seconds. After asphalt binder is added, the mixing time shall not be less than 30 seconds.

If continuous mixing is used, the RAP shall be protected from direct contact with the burner flame with a device such as a shield, separator, or second drum.

PAINT BINDER (TACK COAT)

Paint binder (tack coat) shall be applied to existing surfaces to be surfaced and between layers of asphalt concrete, except when eliminated by the Engineer.

Paint binder (tack coat) shall be, at the option of the Contractor, either slow-setting asphaltic emulsion, rapid-setting asphaltic emulsion or paving asphalt. Slow-setting asphaltic emulsion and rapid-setting asphaltic emulsion shall conform to the provisions in Section 39-4.02, "Prime Coat and Paint Binder (Tack Coat)," and the provisions in Section 94, "Asphaltic Emulsions," of the Standard Specifications. When paving asphalt is used for paint binder, the grade will be determined by the Engineer. Paving asphalt shall conform to the provisions in Section 39-4.02, "Prime Coat and Paint Binder (Tack Coat)," and the provisions in Section 92, "Asphalts," of the Standard Specifications.

Paint binder (tack coat) shall be applied in the gallon per square yard range limits specified for the surfaces to receive asphalt concrete in the tables below. The exact application rate within the range will be determined by the Engineer.

Application Rates for Asphaltic Emulsion Paint Binder (Tack Coat) on Asphalt Concrete (except Open Graded) and on Portland Cement Concrete Pavement (PCCP)		
Type of surface to receive paint binder (tack coat)	Slow-Setting Asphaltic Emulsion gal/sq yd (Note A)	Rapid-Setting Asphaltic Emulsion gal/sq yd (Note B)
Dense, compact surfaces, between layers, and on PCCP	0.04 - 0.08	0.02 - 0.04
Open textured, or dry, aged surfaces	0.08 - 0.20	0.04 - 0.09

Note A: Slow-setting asphaltic emulsion is asphaltic emulsion diluted with additional water. Water shall be added and mixed with the asphaltic emulsion (containing up to 43 percent water) so the resulting mixture contains one part asphaltic emulsion and not more than one part added water. The water shall be added by the emulsion producer or at a facility that has the capability to mix or agitate the combined blend.

Note B: Undiluted rapid-setting asphaltic emulsion.

Application Rates for Paint Binder (Tack Coat) on Asphalt Concrete (except Open Graded) and on Portland Cement Concrete Pavement (PCCP)	
Type of surface to receive paint binder (tack coat)	Paving Asphalt gal/sq yd
Dense, compact surfaces, between layers, and on PCCP	0.01 – 0.02
Open textured, or dry, aged surfaces	0.02 – 0.06

Application Rates for Asphaltic Emulsion Paint Binder (Tack Coat) on Open Graded Asphalt Concrete		
Type of surface to receive paint binder (tack coat)	Slow-Setting Asphaltic Emulsion gal/sq yd (Note A)	Rapid-setting Asphaltic Emulsion gal/sq yd (Note B)
Dense, compact surfaces and between layers	0.06 - 0.11	0.02 - 0.06
Open textured, or dry, aged surfaces	0.11 - 0.24	0.06 - 0.12

Note A: Slow-setting asphaltic emulsion is asphaltic emulsion diluted with additional water. Water shall be added and mixed with the asphaltic emulsion (containing up to 43 percent water) so the resulting mixture contains one part asphaltic emulsion and not more than one part added water. The water shall be added by the emulsion producer or at a facility that has the capability to mix or agitate the combined blend.

Note B: Undiluted rapid-setting asphaltic emulsion.

Application Rates for Paint Binder (Tack Coat) on Open Graded Asphalt Concrete	
Type of surface to receive paint binder (tack coat)	Paving Asphalt gal/sq yd
Dense, compact surfaces and between layers	0.01 - 0.03
Open textured, or dry, aged surfaces	0.03 - 0.07

When asphaltic emulsion is used as paint binder (tack coat), asphalt concrete shall not be placed until the applied asphaltic emulsion has completely changed color from brown to black.

COMPACTION

Asphalt concrete placed in layers of 0.15-foot or less in compacted thickness or widths of less than 5 feet shall be spread and compacted with the equipment and by the methods conforming to the provisions in Section 39, "Asphalt Concrete," of the Standard Specifications. Other asphalt concrete shall be compacted and finished in conformance with the provisions in Section 39 and the following:

A. The provisions in Section 39-5.02, "Compacting Equipment," of the Standard Specifications shall not apply.
B. The Contractor shall furnish a sufficient number of rollers to obtain the compaction specified in these special provisions and the surface finish required by the Standard Specifications and these special provisions.
C. Rollers shall be equipped with pads and water systems that prevent sticking of asphalt mixtures to the pneumatic-tired or steel-tired wheels. A parting agent that will not damage the asphalt mixture may be used.
D. The second paragraph in Section 39-6.01, "General Requirements," of the Standard Specifications shall not apply.
E. Asphalt concrete and asphalt concrete base shall be compacted to obtain the specified relative compaction before the temperature of the mixture drops below 150° F. Additional rolling to achieve the specified relative compaction will not be permitted after the temperature of the mixture drops below 150° F or once the pavement is opened to public traffic. When vibratory rollers are used as finish rollers the vibratory unit shall be turned off.
F. The fifth and seventh through tenth paragraphs of Section 39-6.03, "Compacting," of the Standard Specifications shall not apply.
G. Asphalt concrete and asphalt concrete base shall be compacted to a relative compaction of not less than 96 percent and shall be finished to the lines, grades, and cross section shown on the plans. In-place density of asphalt concrete and asphalt concrete base will be determined before opening the pavement to public traffic.
H. Relative compaction will be determined by California Test 375.
I. If the test results for a quantity of asphalt concrete or asphalt concrete base indicate that the relative compaction is below 96 percent, the Contractor will be notified. Asphalt concrete or asphalt concrete base spreading operations shall not continue until the Contractor has notified the Engineer of the adjustment that will be made in order to meet the specified relative compaction.
J. If the test results for a quantity of asphalt concrete or asphalt concrete base indicate that the relative compaction is less than 96 percent, the asphalt concrete or asphalt concrete base represented by that quantity shall be removed, except as otherwise provided in these special provisions. If requested by the Contractor and approved by the Engineer, asphalt concrete or asphalt concrete base with a relative compaction of 93 percent or greater may remain in place and the Contractor shall pay to the State the amount of reduced compensation for the quantity with relative compaction less than 96 percent and greater than or equal to 93 percent. The Department will deduct the amount of reduced compensation from moneys due, or that may become due, the Contractor under the contract. The amount of reduced compensation the Contractor shall pay to the State will be calculated using the total tons in the quantity with relative compaction less than 96 percent and greater than or equal to 93 percent multiplied by the contract price per ton for asphalt concrete or asphalt concrete base involved multiplied by the following compensation factors:

Relative Compaction (Percent)	Reduced Compensation Factor	Relative Compaction (Percent)	Reduced Compensation Factor
96.0	0.000	94.4	0.062
95.9	0.002	94.3	0.068
95.8	0.004	94.2	0.075
95.7	0.006	94.1	0.082
95.6	0.009	94.0	0.090
95.5	0.012	93.9	0.098
95.4	0.015	93.8	0.108
95.3	0.018	93.7	0.118
95.2	0.022	93.6	0.129
95.1	0.026	93.5	0.142
95.0	0.030	93.4	0.157
94.9	0.034	93.3	0.175
94.8	0.039	93.2	0.196
94.7	0.044	93.1	0.225
94.6	0.050	93.0	0.300
94.5	0.056		

LONGITUDINAL JOINTS

At the Contractor's option longitudinal joints may be constructed using a device attached to the screed that will form a tapered notched wedge in a single pass. Longitudinal joints constructed with a tapered notched wedge shall be compacted to a minimum relative compaction of 93 percent. If longitudinal joints are constructed in this manner, the Contractor shall conduct quality control testing in conformance with the provisions in Section 6-3.02, "Testing By Contractor," of the Standard Specifications, and provide results that include the following:

A. Relative compaction values of the completed longitudinal joints tested using a nuclear gauge which has been calibrated and correlated with core densities in conformance with the requirements in California Test 375 Parts 1 and 2.
B. Nuclear density values taken at the rate of one test for each 750-foot section along the completed longitudinal joint. The Contractor shall select random locations for testing within each 750-foot section.
C. Nuclear density values taken at the centerline of the completed longitudinal joint, 6 inches from the upper vertical notch after the adjacent lane is placed and before opening the pavement to traffic.
D. Maximum density test results.
E. Relative compaction values of the longitudinal joint determined as the ratio of the average of the nuclear density values taken from each 750-foot section and the maximum density test results.

Relative compaction values shall be determined each day the joint is completed and delivered to the Engineer within 24 hours of testing. If the relative compaction of one day's production is less than 90 percent, placement of the tapered notched wedge shall not continue until the Contractor has notified the Engineer of the adjustment that will be made in order to meet the specified relative compaction. If the relative compaction for 3 day's production is less than 90 percent, the Contractor shall notify the Engineer and suspend use of the tapered notched wedge device.

The Engineer will determine relative compaction values for the completed longitudinal joint at the completion of paving as follows:

A. The Engineer will determine relative compaction by using 6-inch diameter cores obtained within the one-foot section of pavement at the completed longitudinal joint.
B. The Contractor shall obtain two 6-inch diameter cores taken 6 inches from the upper vertical notch of the completed longitudinal joint for every 3,000 feet along the completed longitudinal joint at locations designated by the Engineer. Cores shall be obtained after the adjacent lane is placed and before opening the pavement to traffic. Cores shall be obtained in the presence of the Engineer and shall be marked to identify the test sites.
C. The Contractor shall deliver the cores to the Engineer. One core will be used for determination of the relative density and one core will be used for dispute resolution.
D. The Engineer will determine the bulk specific gravity of the cores in conformance with the requirements of California Test 308, Method A.
E. Relative compaction will be calculated as the ratio of the average of the core densities from each day's production to the maximum density test value determined in conformance with the requirements in California Test 375, Part 6.

Quantities of asphalt concrete placed in the completed longitudinal joint that fail to meet the relative compaction requirements of these special provisions will be subject to reduced compensation. The reduction in compensation shall be determined as follows:

A. Quantity = one foot x 3,000 feet x (thickness of the layer placed) x (maximum density test value) x (relative compaction value).
B. Reduction in compensation = Quantity x (reduction factor) x (contract item price).
C. The reduction factor will be determined using the following table:

Relative Compaction (Percent)	Reduced Compensation Factor	Relative Compaction (Percent)	Reduced Compensation Factor
93.0	0.000	91.4	0.062
92.9	0.002	91.3	0.068
92.8	0.004	91.2	0.075
92.7	0.006	91.1	0.082
92.6	0.009	91.0	0.090
92.5	0.012	90.9	0.098
92.4	0.015	90.8	0.108
92.3	0.018	90.7	0.118
92.2	0.022	90.6	0.129
92.1	0.026	90.5	0.142
92.0	0.030	90.4	0.157
91.9	0.034	90.3	0.175
91.8	0.039	90.2	0.196
91.7	0.044	90.1	0.225
91.6	0.050	90.0	0.300
91.5	0.056		

Quantities of asphalt concrete placed in the completed longitudinal joint that meet the relative compaction requirements of these special provisions will not be measured as part of the quantity of asphalt concrete placed in the paved lane and will not be subject to reduced compensation or removal as determined by the relative compaction of the lane widths involved.

In addition to the cores taken every 3,000 feet along the completed longitudinal joint, the Contractor shall take 6-inch diameter cores every 10,000 feet approximately 3 feet and 9 feet perpendicular from the 3,000-foot core test sites. Cores may be taken on either side of the completed longitudinal joint. The Contractor shall mark core samples to identify the test sites. The Contractor shall determine the bulk specific gravity of each core in conformance with California Test 308, Method A and relative compaction as specified in these special provisions. Results of this testing shall be for reporting only.

Aggregate for asphalt concrete dikes shall be in conformance with the provisions for 3/8-inch maximum grading in Section 39-2.02, "Aggregate," of the Standard Specifications.

If the Contractor selects the batch mixing method, asphalt concrete shall be produced by the automatic batch mixing method in conformance with the provisions in Section 39-3.03A(2), "Automatic Proportioning," of the Standard Specifications.

If the finished surface of the asphalt concrete on Auburn Folsom Road traffic lanes does not meet the specified surface tolerances, the surfacing shall be brought within tolerance by either (1) abrasive grinding (with fog seal coat on the areas which have been ground), (2) removal and replacement or (3) placing an overlay of asphalt concrete. The method will be selected by the Engineer. The corrective work shall be at the Contractor's expense.

If abrasive grinding is used to bring the finished surface to the specified surface tolerances, additional grinding shall be performed, as necessary, to extend the area ground in each lateral direction so that the lateral limits of grinding are at a constant offset from, and parallel to, the nearest lane line or pavement edge, and in each longitudinal direction so that the grinding begins and ends at lines normal to the pavement centerline, within any ground area. Ground areas shall be neat rectangular areas of uniform surface appearance. Abrasive grinding shall conform to the provisions in the first paragraph and the last 4 paragraphs in Section 42-2.02, "Construction," of the Standard Specifications.

In addition to the straightedge provisions in Section 39-6.03, "Compacting," of the Standard Specifications, asphalt concrete pavement shall conform to the surface tolerances specified herein.

General Criteria for Profiling

The uppermost layer of Type A asphalt concrete surfacing shall be profiled in the presence of the Engineer using a California Profilograph or equivalent in conformance with California Test 526 and as specified in these special provisions.

The California Profilograph or equivalent will not be required for the following areas of the pavement surface but shall conform to the straightedge requirements in Section 39-6.03, "Compacting," of the Standard Specifications:

A. Pavement with a total thickness less than 3 inches.

B. Pavement on horizontal curves with a centerline curve radius of less than 1,000 feet and the pavement within the superelevation transition on those curves.
C. Pavement placed in a single lift when required by the special provisions.
D. Pavement with extensive grade or cross slope correction which does not receive advance leveling operations in conformance with the provisions in Section 39-6.02, "Spreading," of the Standard Specifications.
E. Pavement for ramps and connectors with steep grades and high rates of superelevation, as determined by the Engineer.
F. Pavement sections of city or county streets and roads, and turn lanes and collector lanes that are less than 1,600 feet in length.
G. Shoulders and miscellaneous areas.
H. Pavement placed within 3 feet from and parallel with the joint between asphalt concrete pavement and existing curbs, gutters or existing pavement.
I. Pavement surface within 50 feet of a transverse joint that separates the pavement from an existing pavement, approach slab or structure surface not constructed under the contract.

The Contractor shall conform to California Test 526, except a zero (null) blanking band shall be used for determining the Profile Index. Prior to beginning profiles, the profilograph shall be calibrated in the presence of the Engineer. Two profiles shall be obtained within each traffic lane, 3 feet from and parallel with the edges of the lane.

Pavements profiled shall conform to the following Profile Index requirements:

A. Pavement on tangent alignment and pavement on horizontal curves having a centerline curve radius of 2,000 feet or more shall have a Profile Index of 1.9 inches or less for each 320-foot section profiled.
B. Pavement on horizontal curves having a centerline curve radius of 1,000 feet or more but less than 2,000 feet, including the pavement within the superelevation transition of these curves, shall have a Profile Index of 3.8 inches or less for each 320-foot section profiled.
C. Pavement within any 320 foot section, containing high point areas with deviations in excess of 0.3-inch in a length of 24 feet or less, when tested in conformance with the requirements in California Test 526, shall be corrected by the Contractor regardless of the Profile Index.

The Contractor shall complete initial runs of the profilograph prior to opening the pavement to public traffic. Profilograph operations shall be in conformance with the lane closure requirements in "Maintaining Traffic" of these special provisions. If initial profiles can not made prior to opening the pavement to public traffic, the initial runs of the profilograph shall be made the next day that traffic control is permitted for the area to be profiled.

Areas of the top surface of the uppermost layer of Type A asphalt concrete pavement that do not meet the specified surface tolerances shall be brought within tolerance by abrasive grinding.

Abrasive grinding shall be performed to reduce individual deviations in excess of 0.3–inch, and to reduce the Profile Index of the pavement to be within the specified tolerance. Areas which have been subjected to abrasive grinding shall receive a seal coat. Deviations in excess of 0.3–inch which cannot be brought into specified tolerance by abrasive grinding shall be corrected by either (1) removal and replacement or (2) placing an overlay of asphalt concrete. The corrective method for each area shall be selected by the Contractor and shall be approved by the

Engineer prior to beginning the corrective work. Replacement or overlay pavement not meeting the specified tolerances shall be corrected by the methods specified above. Corrective work shall be at the Contractor's expense except that flagging costs will be paid for in conformance to the provisions in Section 12-2, "Flagging," of the Standard Specifications. The Contractor shall run profilograms on the areas that have received abrasive grinding or corrective work until the final profilograms indicate the Profile Index of the area is within the specified tolerance.

When abrasive grinding is used to bring the top surface of the uppermost layer of asphalt concrete surfacing within the specified surface tolerances, additional abrasive grinding shall be performed as necessary to extend the area ground in each lateral direction so that the lateral limits of grinding are at a constant offset from, and parallel with, the nearest lane line or pavement edge, and in each longitudinal direction so that the grinding begins and ends at lines normal to the pavement centerline, within a ground area. Ground areas shall be neat rectangular areas of uniform surface appearance.

The original of the final profilograms that indicate the pavement surface is within the Profile Index specified shall become the property of the State and shall be delivered to the Engineer prior to acceptance of the contract.

Full compensation for performing all profile checks for Profile Index and furnishing final profilograms to the Engineer, for performing all corrective work to the pavement surface including abrasive grinding, removing, and replacing asphalt concrete or placing an asphalt concrete overlay to bring the surface within the tolerance specified shall be considered as included in the contract price paid per ton for asphalt concrete (Type A) and open graded asphalt and no separate payment wil=l be made therefor.

10-1.35 PILING

GENERAL

Piling shall conform to the provisions in Section 49, "Piling," of the Standard Specifications, and these special provisions.

Unless otherwise specified, welding of any work performed in conformance with the provisions in Section 49, "Piling," of the Standard Specifications, shall be in conformance with the requirements in AWS D1.1.

Attention is directed to "Project Information," and "Welding"of these special provisions.

CAST-IN-DRILLED-HOLE CONCRETE PILES

Cast-in-drilled-hole concrete piling shall conform to the provisions in Section 49-4, "Cast-In-Place Concrete Piles," of the Standard Specifications and these special provisions.

The provisions of "Welding" of these special provisions shall not apply to temporary steel casings.

Cast-in-drilled-hole concrete piles 24 inches in diameter or larger may be constructed by excavation and depositing concrete under slurry.

Materials

Concrete deposited under slurry shall have a nominal penetration equal to or greater than 3-1/2 inches. Concrete shall be proportioned to prevent excessive bleed water and segregation.

Concrete deposited under slurry shall contain not less than 675 pounds of cementitious material per cubic yard.

The combined aggregate grading used in concrete for cast-in-drilled-hole concrete piling shall be either the one-inch maximum grading, the 1/2-inch maximum grading, or the 3/8-inch maximum grading and shall conform to the requirements in Section 90-3, "Aggregate Gradings," of the Standard Specifications.

Mineral Slurry

Mineral slurry shall be mixed and thoroughly hydrated in slurry tanks, and slurry shall be sampled from the slurry tanks and tested before placement in the drilled hole.

Slurry shall be recirculated or continuously agitated in the drilled hole to maintain the specified properties.

Recirculation shall include removal of drill cuttings from the slurry before discharging the slurry back into the drilled hole. When recirculation is used, the slurry shall be sampled and tested at least every 2 hours after beginning its use until tests show that the samples taken from the slurry tank and from near the bottom of the hole have consistent specified properties. Subsequently, slurry shall be sampled at least twice per shift as long as the specified properties remain consistent.

Slurry that is not recirculated in the drilled hole shall be sampled and tested at least every 2 hours after beginning its use. The slurry shall be sampled mid-height and near the bottom of the hole. Slurry shall be recirculated when tests show that the samples taken from mid-height and near the bottom of the hole do not have consistent specified properties.

Slurry shall also be sampled and tested before final cleaning of the bottom of the hole and again just before placing concrete. Samples shall be taken from mid-height and near the bottom of the hole. Cleaning of the bottom of the hole and placement of the concrete shall not start until tests show that the samples taken from mid-height and near the bottom of the hole have consistent specified properties.

Mineral slurry shall be tested for conformance to the requirements shown in the following table:

MINERAL SLURRY		
PROPERTY	REQUIREMENT	TEST
Density (pcf) - before placement in the drilled hole - during drilling - before final cleaning - immediately before placing concrete	64.3* to 69.1* 64.3* to 75.0*	Mud Weight (Density) API 13B-1 Section 1
Viscosity (seconds/quart) bentonite attapulgite	28 to 50 28 to 40	Marsh Funnel and Cup API 13B-1 Section 2.2
pH	8 to 10.5	Glass Electrode pH Meter or pH Paper
Sand Content (percent) - before final cleaning - immediately before placing concrete	less than or equal to 4.0	Sand API 13B-1 Section 5
*When approved by the Engineer, slurry may be used in salt water, and the allowable densities may be increased up to 2 pcf. Slurry temperature shall be at least 40°F when tested.		

Any caked slurry on the sides or bottom of hole shall be removed before placing reinforcement. If concrete is not placed immediately after placing reinforcement, the reinforcement shall be removed and cleaned of slurry, the sides of the drilled hole cleaned of caked slurry, and the reinforcement again placed in the hole for concrete placement.

Synthetic Slurry

Synthetic slurries shall be used in conformance with the manufacturer's recommendations and these special provisions. The following synthetic slurries may be used:

PRODUCT	MANUFACTURER
SlurryPro CDP	KB Technologies Ltd. 3648 FM 1960 West Suite 107 Houston, TX 77068 (800) 525-5237
Super Mud	PDS Company c/o Champion Equipment Company 8140 East Rosecrans Ave. Paramount, CA 90723 (562) 634-8180
Shore Pac GCV	CETCO Drilling Products Group 1350 West Shure Drive Arlington Heights, IL 60004 (847) 392-5800
Novagel Polymer	Geo-Tech Drilling Fluids 220 N. Zapata Hwy, Suite 11A Laredo, TX 78043 (210) 587-4758

Inclusion of a synthetic slurry on the above list may be obtained by meeting the Department's requirements for synthetic slurries. The requirements can be obtained from the Offices of Structures Design, P.O. Box 168041, MS# 9-4/11G, Sacramento, CA 95816-8041.

Synthetic slurries listed may not be appropriate for a given site.

Synthetic slurries shall not be used in holes drilled in primarily soft or very soft cohesive soils as determined by the Engineer.

A manufacturer's representative, as approved by the Engineer, shall provide technical assistance for the use of their product, shall be at the site before introduction of the synthetic slurry into a drilled hole, and shall remain at the site until released by the Engineer.

Synthetic slurries shall be sampled and tested at both mid-height and near the bottom of the drilled hole. Samples shall be taken and tested during drilling as necessary to verify the control of the properties of the slurry. Samples shall be taken and tested when drilling is complete, but before final cleaning of the bottom of the hole. When samples are in conformance with the requirements shown in the following tables for each slurry product, the bottom of the hole shall be cleaned and any loose or settled material removed. Samples shall be obtained and tested after final cleaning and immediately before placing concrete.

SlurryPro CDP synthetic slurries shall be tested for conformance to the requirements shown in the following table:

SLURRYPRO CDP KB Technologies Ltd.		
PROPERTY	REQUIREMENT	TEST
Density (pcf) - during drilling - before final cleaning - just before placing concrete	 less than or equal to 67.0* less than or equal to 64.0*	Mud Weight (Density) API 13B-1 Section 1
Viscosity (seconds/quart) - during drilling -before final cleaning - just before placing concrete	 50 to 120 less than or equal to 70	Marsh Funnel and Cup API 13B-1 Section 2.2
pH	6 to 11.5	Glass Electrode pH Meter or pH Paper
Sand Content (percent) - before final cleaning - just before placing concrete	 less than or equal to 0.5	Sand API 13B-1 Section 5
*When approved by the Engineer, slurry may be used in salt water, and the allowable densities may be increased up to 2 pcf. Slurry temperature shall be at least 40°F when tested.		

Super Mud synthetic slurries shall be tested for conformance to the requirements shown in the following table:

SUPER MUD PDS Company		
PROPERTY	REQUIREMENT	TEST
Density (pcf) - before final cleaning - just before placing concrete	less than or equal to 64.0*	Mud Weight (Density) API 13B-1 Section 1
Viscosity (seconds/quart) - during drilling - before final cleaning - just before placing concrete	32 to 60 less than or equal to 60	Marsh Funnel and Cup API 13B-1 Section 2.2
pH	8 to 10.0	Glass Electrode pH Meter or pH Paper
Sand Content (percent) - before final cleaning -just before placing concrete	less than or equal to 0.5	Sand API 13B-1 Section 5
*When approved by the Engineer, slurry may be used in salt water, and the allowable densities may be increased up to 2 pcf. Slurry temperature shall be at least 40°F when tested.		

Shore Pac GCV synthetic slurries shall be tested for conformance to the requirements shown in the following table:

Shore Pac GCV CETCO Drilling Products Group		
PROPERTY	REQUIREMENT	TEST
Density (pcf) - before final cleaning - just before placing concrete	less than or equal to 64.0*	Mud Weight (Density) API 13B-1 Section 1
Viscosity (seconds/quart) - during drilling - before final cleaning - just before placing concrete	33 to 74 less than or equal to 57	Marsh Funnel and Cup API 13B-1 Section 2.2
pH	8.0 to 11.0	Glass Electrode pH Meter or pH Paper
Sand Content (percent) - before final cleaning -just before placing concrete	less than or equal to 0.5	Sand API 13B-1 Section 5
*When approved by the Engineer, slurry may be used in salt water, and the allowable densities may be increased up to 2 pcf. Slurry temperature shall be at least 40°F when tested.		

Novagel Polymer synthetic slurries shall be tested for conformance to the requirements shown in the following table:

NOVAGEL POLYMER Geo-Tech Drilling Fluids		
PROPERTY	REQUIREMENT	TEST
Density (pcf) - during drilling - before final cleaning - just before placing concrete	 less than or equal to 67.0* less than or equal to 64.0*	Mud Weight (Density) API 13B-1 Section 1
Viscosity (seconds/quart) - during drilling - before final cleaning - just before placing concrete	 45 to 104 less than or equal to 104	Marsh Funnel and Cup API 13B-1 Section 2.2
pH	6.0 to 11.5	Glass Electrode pH Meter or pH Paper
Sand Content (percent) - before final cleaning -just before placing concrete	 less than or equal to 0.5	Sand API 13B-1 Section 5
*When approved by the Engineer, slurry may be used in salt water, and the allowable densities may be increased up to 2 pcf. Slurry temperature shall be at least 40°F when tested.		

Water Slurry

At the option of the Contractor, water may be used as slurry when casing is used for the entire length of the drilled hole.

Water slurry shall be tested for conformance to the requirements shown in the following table:

WATER SLURRY		
PROPERTY	REQUIREMENT	TEST
Density (pcf) - before final cleaning - just before placing concrete	63.5*	Mud Weight (Density) API 13B-1 Section 1
Sand Content (percent) - before final cleaning -just before placing concrete	less than or equal to 0.5	Sand API 13B-1 Section 5
*When approved by the Engineer, salt water slurry may be used and the allowable densities may be increased up to 2 pcf.		

Construction

The Contractor shall submit a placing plan to the Engineer for approval prior to producing the test batch for cast-in-drilled-hole concrete piling and at least 10 working days prior to constructing piling. The plan shall include complete descriptions, details, and supporting calculations as listed below:

A. Requirements for all cast-in-drilled-hole concrete piling:

1. Concrete mix design, certified test data, and trial batch reports.
2. Drilling or coring methods and equipment.
3. Proposed method for casing installation and removal when necessary.
4. Plan view drawing of pile showing reinforcement and inspection pipes, if required.
5. Methods for placing, positioning, and supporting bar reinforcement.
6. Methods and equipment for accurately determining the depth of concrete and actual and theoretical volume placed, including effects on volume of concrete when any casings are withdrawn.
7. Methods and equipment for verifying that the bottom of the drilled hole is clean prior to placing concrete.
8. Methods and equipment for preventing upward movement of reinforcement, including the Contractor's means of detecting and measuring upward movement during concrete placement operations.

B. Additional requirements when concrete is placed under slurry:

1. Concrete batching, delivery, and placing systems, including time schedules and capacities therefor. Time schedules shall include the time required for each concrete placing operation at each pile.
2. Concrete placing rate calculations. When requested by the Engineer, calculations shall be based on the initial pump pressures or static head on the concrete and losses throughout the placing system, including anticipated head of slurry and concrete to be displaced.
3. Suppliers' test reports on the physical and chemical properties of the slurry and any proposed slurry chemical additives, including Material Safety Data Sheet.
4. Slurry testing equipment and procedures.
5. Methods of removal and disposal of excavation, slurry, and contaminated concrete, including removal rates.
6. Methods and equipment for slurry agitating, recirculating, and cleaning.

In addition to compressive strength requirements, the consistency of the concrete to be deposited under slurry shall be verified before use by producing a test batch. The test batch shall be produced and delivered to the project under conditions and in time periods similar to those expected during the placement of concrete in the piles. Concrete for the test batch shall be placed in an excavated hole or suitable container of adequate size to allow for testing as specified herein. Depositing of test batch concrete under slurry will not be required. In addition to meeting the specified nominal penetration, the test batch shall meet the following requirements:

A. For piles where the time required for each concrete placing operation, as submitted in the placing plan, will be 2 hours or less, the test batch shall demonstrate that the proposed concrete mix design achieves either a penetration of at least 2 inches or a slump of at least 5 inches after twice that time has elapsed.
B. For piles where the time required for each concrete placing operation, as submitted in the placing plan, will be more than 2 hours, the test batch shall demonstrate that the proposed concrete mix design achieves either a penetration of at least 2 inches or a slump of at least 5 inches after that time plus 2 hours has elapsed.

The time period shall begin at the start of placement. The concrete shall not be vibrated or agitated during the test period. Penetration tests shall be performed in conformance with the requirements in California Test 533. Slump tests shall be performed in conformance with the requirements in ASTM Designation: C 143/C143M. Upon completion of testing, the concrete shall be disposed of in conformance with the provisions in Section 7-1.13, "Disposal of Material Outside the Highway Right of Way," of the Standard Specifications.

The concrete deposited under slurry shall be carefully placed in a compact, monolithic mass and by a method that will prevent washing of the concrete. Concrete deposited under slurry need not be vibrated. Placing concrete shall be a continuous operation lasting not more than the time required for each concrete placing operation at each pile, as submitted in the placing plan, unless otherwise approved in writing by the Engineer. The concrete shall be placed with concrete pumps and delivery tube system of adequate number and size to complete the placing of concrete in the time specified. The delivery tube system shall consist of one of the following:

A. A tremie tube or tubes, each of which are at least 10 inches in diameter, fed by one or more concrete pumps.
B. One or more concrete pump tubes, each fed by a single concrete pump.

The delivery tube system shall consist of watertight tubes with sufficient rigidity to keep the ends always in the mass of concrete placed. If only one delivery tube is utilized to place the concrete, the tube shall be placed near the center of the drilled hole. Multiple tubes shall be uniformly spaced in the hole. Internal bracing for the steel reinforcing cage shall accommodate the delivery tube system. Tremies shall not be used for piles without space for a 10-inch tube.

Spillage of concrete into the slurry during concrete placing operations shall not be allowed. Delivery tubes shall be capped with a watertight cap, or plugged above the slurry level with a good quality, tight fitting, moving plug that will expel the slurry from the tube as the tube is charged with concrete. The cap or plug shall be designed to be released as the tube is charged. The pump discharge or tremie tube shall extend to the bottom of the hole before charging the tube with concrete. After charging the delivery tube system with concrete, the flow of concrete through a tube shall be induced by slightly raising the discharge end. During concrete placement, the tip of the delivery tube shall be maintained as follows to prevent reentry of the slurry into the tube. Until at least 10 feet of concrete has been placed, the tip of the delivery tube shall be within 6 inches of the bottom of the drilled hole, and then the embedment of the tip shall be maintained at least 10 feet below the top surface of the concrete. Rapid raising or lowering of the delivery tube shall not be permitted. If the seal is lost or the delivery tube becomes plugged and must be removed, the tube shall be withdrawn, the tube cleaned, the tip of the tube capped to prevent entrance of the slurry, and the operation restarted by pushing the capped tube 10 feet into the concrete and then reinitiating the flow of concrete.

When slurry is used, a fully operational standby concrete pump, adequate to complete the work in the time specified, shall be provided at the site during concrete placement. The slurry level shall be maintained within 12 inches of the top of the drilled hole.

A log of concrete placement for each drilled hole shall be maintained by the Contractor when concrete is deposited under slurry. The log shall show the pile location, tip elevation, dates of excavation and concrete placement, total quantity of concrete deposited, length and tip elevation of any casing, and details of any hole stabilization method and materials used. The log shall include a 8-1/2" x 11" sized graph of the concrete placed versus depth of hole filled. The graph shall be plotted continuously throughout placing of concrete. The depth of drilled hole filled shall be plotted vertically with the pile tip oriented at the bottom and the quantity of concrete shall be plotted horizontally. Readings shall be made at least at each 5 feet of pile depth, and the time of the reading shall be indicated. The graph shall be labeled with the pile location, tip elevation, cutoff elevation, and the dates of excavation and concrete placement. The log shall be delivered to the Engineer within one working day of completion of placing concrete in the pile.

After placing reinforcement and prior to placing concrete in the drilled hole, if drill cuttings settle out of the slurry, the bottom of the drilled hole shall be cleaned. The Contractor shall verify that the bottom of the drilled hole is clean.

If temporary casing is used, concrete placed under slurry shall be maintained at a level at least 5 feet above the bottom of the casing. The withdrawal of casings shall not cause contamination of the concrete with slurry.

Acceptance Testing and Mitigation

Vertical inspection pipes for acceptance testing shall be provided in all cast-in-drilled-hole concrete piles that are 24 inches in diameter or larger, except when the holes are dry or when the holes are dewatered without the use of temporary casing to control ground water.

Inspection pipes shall be Schedule 40 polyvinyl chloride pipes with a nominal inside diameter of 2 inches. Each inspection pipe shall be capped top and bottom and shall have watertight couplers to provide a clean, dry and unobstructed 2-inch-diameter clear opening from 3 feet above the pile cutoff down to the bottom of the reinforcing cage.

Inspection pipes shall be placed around the pile, inside the outermost spiral or hoop reinforcement, and 3 inches clear of the vertical reinforcement, at a uniform spacing not exceeding 2 feet 9 inches measured along the circle passing through the centers of inspection pipes. A minimum of 2 inspection pipes per pile shall be used. When the vertical reinforcement is not bundled and each bar is not more than one inch in diameter, inspection pipes may be placed 2 inches clear of the vertical reinforcement. The inspection pipes shall be placed to provide the maximum diameter circle that passes through the centers of the inspection pipes while maintaining the clear spacing required herein. The pipes shall be installed in straight alignment, parallel to the main reinforcement, and securely fastened in place to prevent misalignment during installation of the reinforcement and placing of concrete in the hole.

The Contractor shall log the location of the inspection pipe couplers with respect to the plane of pile cut off, and these logs shall be delivered to the Engineer upon completion of the placement of concrete in the drilled hole.

After placing concrete and before requesting acceptance tests, each inspection pipe shall be tested by the Contractor in the presence of the Engineer by passing a 1.9-inch-diameter rigid cylinder 2 feet long through the complete length of pipe. If the 1.9-inch-diameter rigid cylinder fails to pass any of the inspection pipes, the Contractor shall attempt to pass a 1-1/4-inch-diameter rigid cylinder 4.5 feet long through the complete length of those pipes in the presence of the Engineer. If an inspection pipe fails to pass the 1-1/4-inch-diameter cylinder, the Contractor shall immediately fill all inspection pipes in the pile with water.

The Contractor shall replace each inspection pipe that does not pass the 1-1/4-inch-diameter cylinder with a 2-inch-diameter hole cored through the concrete for the entire length of the pile. Cored holes shall be located as close as possible to the inspection pipes they are replacing and shall be no more than 6 inches inside the reinforcement. Coring shall not damage the pile reinforcement. Cored holes shall be made with a double wall core barrel system utilizing a split tube type inner barrel. Coring with a solid type inner barrel will not be allowed. Coring methods and equipment shall provide intact cores for the entire length of the pile concrete. The coring operation shall be logged by an Engineering Geologist or Civil Engineer licensed in the State of California and experienced in core logging. Coring logs shall include complete descriptions of inclusions and voids encountered during coring, and shall be delivered to the Engineer upon completion. Concrete cores shall be preserved, identified with the exact location the core was recovered from within the pile, and made available for inspection by the Engineer.

Acceptance tests of the concrete will be made by the Engineer, without cost to the Contractor. Acceptance tests will evaluate the homogeneity of the placed concrete. Tests will include gamma-gamma logging. Tests may also include crosshole sonic logging and other means of inspection selected by the Engineer. The Contractor shall not conduct operations within 25 feet of the gamma-gamma logging operations. The Contractor shall separate reinforcing steel as necessary to allow the Engineer access to the inspection pipes to perform

gamma-gamma logging or other acceptance testing. After requesting acceptance tests and providing access to the piling, the Contractor shall allow 3 weeks for the Engineer to conduct these tests and make determination of acceptance if the 1.9-inch-diameter cylinder passed all inspection pipes, and 4 weeks if only the 1-1/4-inch-diameter cylinder passed all inspection pipes. Should the Engineer fail to complete these tests within the time allowance, and if in the opinion of the Engineer, the Contractor's controlling operation is delayed or interfered with by reason of the delay in inspection, the delay will be considered a right of way delay as specified in Section 8-1.09, "Right of Way Delays," of the Standard Specifications.

All inspection pipes and cored holes in a pile shall be dewatered and filled with grout after notification by the Engineer that the pile is acceptable. Placement and removal of water in the inspection pipes shall be at the Contractor’s expense. Grout shall conform to the provisions in Section 50-1.09, "Bonding and Grouting," of the Standard Specifications. The inspection pipes and holes shall be filled using grout tubes that extend to the bottom of the pipe or hole or into the grout already placed.

If acceptance testing performed by the Engineer determines that a pile does not meet the requirements of the specifications, then that pile will be rejected and all depositing of concrete under slurry or concrete placed using temporary casing for the purpose of controlling groundwater shall be suspended until written changes to the methods of pile construction are approved in writing by the Engineer.

The Contractor shall submit to the Engineer for approval a mitigation plan for repair, supplementation, or replacement for each rejected cast-in-drilled-hole concrete pile, and this plan shall conform to the provisions in Section 5-1.02, "Plans and Working Drawings," of the Standard Specifications. Prior to submitting this mitigation plan, the Engineer will hold a repair feasibility meeting with the Contractor to discuss the feasibility of repairing rejected piling. The Engineer will consider the size of the defect, the location of the defect, and the design information and corrosion protection considerations for the pile. This information will be made available to the Contractor, if appropriate, for the development of the mitigation plan. If the Engineer determines that it is not feasible to repair the rejected pile, the Contractor shall not include repair as a means of mitigation and shall proceed with the submittal of a mitigation plan for replacement or supplementation of the rejected pile.

If the Engineer determines that a rejected pile does not require mitigation due to structural, geotechnical, or corrosion concerns, the Contractor may elect to 1) repair the pile per the approved mitigation plan, or 2) not repair anomalies found during acceptance testing of that pile. For such unrepaired piles, the Contractor shall pay to the State, $300 per cubic yard for the portion of the pile affected by the anomalies. The volume, in cubic yards, of the portion of the pile affected by the anomalies, shall be calculated as the area of the cross section of the pile affected by each anomaly, in square yards, as determined by the Engineer, multiplied by the distance, in yards, from the top of each anomaly to the specified tip of the pile. If the volume calculated for one anomaly overlaps the volume calculated for additional anomalies within the pile, the calculated volume for the overlap shall only be counted once. In no case shall the amount of the payment to the State for any such pile be less than $300. The Department may deduct the amount from any moneys due, or that may become due the Contractor under the contract.

Pile mitigation plans shall include the following:

A. The designation and location of the pile addressed by the mitigation plan.

B. A review of the structural, geotechnical, and corrosion design requirements of the rejected pile.
C. A step by step description of the mitigation work to be performed, including drawings if necessary.
D. An assessment of how the proposed mitigation work will address the structural, geotechnical, and corrosion design requirements of the rejected pile.
E. Methods for preservation or restoration of existing earthen materials.
F. A list of affected facilities, if any, with methods and equipment for protection of these facilities during mitigation.
G. The State assigned contract number, bridge number, full name of the structure as shown on the contract plans, District-County-Route-Post Mile, and the Contractor's (and Subcontractor's if applicable) name on each sheet.
H. A list of materials, with quantity estimates, and personnel, with qualifications, to be used to perform the mitigation work.
I. The seal and signature of an engineer who is licensed as a Civil Engineer by the State of California.

For rejected piles to be repaired, the Contractor shall submit a pile mitigation plan that contains the following additional information:

A. An assessment of the nature and size of the anomalies in the rejected pile.
B. Provisions for access for additional pile testing if required by the Engineer.

For rejected piles to be replaced or supplemented, the Contractor shall submit a pile mitigation plan that contains the following additional information:

A. The proposed location and size of additional piling.
B. Structural details and calculations for any modification to the structure to accommodate the replacement or supplemental piling.

All provisions for cast-in-drilled-hole concrete piling shall apply to replacement piling.

The Contractor shall allow the Engineer 3 weeks to review the mitigation plan after a complete submittal has been received.

Should the Engineer fail to review the complete pile mitigation submittal within the time specified, and if, in the opinion of the Engineer, the Contractor's controlling operation is delayed or interfered with by reason of the delay in reviewing the pile mitigation plan, an extension of time commensurate with the delay in completion of the work thus caused will be granted in conformance with the provisions in Section 8-1.09, "Right of Way Delays," of the Standard Specifications.

When repairs are performed, the Contractor shall submit a mitigation report to the Engineer within 10 days of completion of the repair. This report shall state exactly what repair work was performed and quantify the success of the repairs relative to the submitted mitigation plan. The mitigation report shall be stamped and signed by an engineer that is licensed as a Civil Engineer by the State of California. The mitigation report shall show the State assigned contract number, bridge number, full name of the structure as shown on the contract plans, District-County-Route-Post Mile, and the Contractor (and subcontractor if applicable) name on each sheet. The

Engineer will be the sole judge as to whether a mitigation proposal is acceptable, the mitigation efforts are successful, and to whether additional repairs, removal and replacement, or construction of a supplemental foundation is required.

10-1.36 STEEL STRUCTURES

Construction of steel structures shall conform to the provisions in Section 55, "Steel Structures," of the Standard Specifications and these special provisions.

Attention is directed to "Welding" in Section 8, "Materials," of these special provisions.

ROTATIONAL CAPACITY TESTING PRIOR TO SHIPMENT TO JOB SITE

Rotational capacity tests shall be performed on all lots of high-strength fastener assemblies prior to shipment of these lots to the project site. Zinc-coated assemblies shall be tested after all fabrication, coating, and lubrication of components has been completed. One hardened washer shall be used under each nut for the tests.

The requirements of this section do not apply to high-strength cap screws or high-strength bolts used for slip base plates.

Each combination of bolt production lot, nut lot, and washer lot shall be tested as an assembly.

A rotational capacity lot number shall be assigned to each combination of lots tested. Each shipping unit of fastener assemblies shall be plainly marked with the rotational capacity lot number.

Two fastener assemblies from each rotational capacity lot shall be tested.

The following equipment, procedure, and acceptance criteria shall be used to perform rotational capacity tests on and determine acceptance of long bolts. Fasteners are considered to be long bolts when full nut thread engagement can be achieved when installed in a bolt tension measuring device:

A. Long Bolt Test Equipment:

1. Calibrated bolt tension measuring device with adequate tension capacity for the bolts being tested.
2. Calibrated dial or digital torque wrench. Other suitable tools will be required for performing Steps 7 and 8 of the Long Bolt Test Procedure. A torque multiplier may be required for large diameter bolts.
3. Spacer washers or bushings. When spacer washers or bushings are required, they shall have the same inside diameter and equal or larger outside diameter as the appropriate hardened washers conforming to the requirements in ASTM Designation: F 436.
4. Steel beam or member, such as a girder flange or cross frame, to which the bolt tension measuring device will be attached. The device shall be accessible from the ground.

B Long Bolt Test Procedure:

1. Measure the bolt length. The bolt length is defined as the distance from the end of the threaded portion of the shank to the underside of the bolt head.
2. Install the nut on the bolt so that 3 to 5 full threads of the bolt are located between the bearing face of the nut and the underside of the bolt head. Measure and record the thread stickout of the bolt. Thread stickout is determined by measuring the distance from the outer face of the nut to the end of the threaded portion of the shank.
3. Insert the bolt into the bolt tension measuring device and install the required number of washers, and additional spacers as needed, directly beneath the nut to produce the thread stickout measured in Step 2 of this procedure.
4. Tighten the nut using a hand wrench to a snug-tight condition. The snug tension shall not be less than the Table A value but may exceed the Table A value by a maximum of 2 kips.

Table A

High-Strength Fastener Assembly Tension Values to Approximate Snug-Tight Condition	
Bolt Diameter (inches)	Snug Tension (kips)
1/2	1
5/8	2
3/4	3
7/8	4
1	5
1-1/8	6
1-1/4	7
1-3/8	9
1-1/2	10

5. Match-mark the assembly by placing a heavy reference start line on the face plate of the bolt tension measuring device which aligns with (1) a mark placed on one corner of the nut and (2) a radial line placed across the flat on the end of the bolt or on the exposed portions of the threads of tension control bolts. Place an additional mark on the outside of the socket that overlays the mark on the nut corner such that this mark will be visible while turning the nut. Make an additional mark on the face plate, either 2/3 of a turn, one turn, or 1-1/3 turn clockwise from the heavy reference start line, depending on the bolt length being tested as shown in Table B.

Table B

Required Nut Rotation for Rotational Capacity Tests[(a) (b)]	
Bolt Length (measured in Step 1)	Required Rotation (turn)
4 bolt diameters or less	2/3
Greater than 4 bolt diameters but no more than 8 bolt diameters	1
Greater than 8 bolt diameters, but no more than 12 bolt diameters[(c)]	1-1/3

(a) Nut rotation is relative to bolt, regardless of the element (nut or bolt) being turned. For bolts installed by 1/2 turn and less, the tolerance shall be plus or minus 30 degrees; for bolts installed by 2/3 turn and more, the tolerance shall be plus or minus 45 degrees.
(b) Applicable only to connections in which all material within grip of the bolt is steel.
(c) When bolt length exceeds 12 diameters, the required rotation shall be determined by actual tests in a suitable tension device simulating the actual conditions.

6. Turn the nut to achieve the applicable minimum bolt tension value listed in Table C. After reaching this tension, record the moving torque, in foot-pounds, required to turn the nut, and also record the corresponding bolt tension value in pounds. Torque shall be measured with the nut in motion. Calculate the value, T, where T = [(the measured tension in pounds) x (the bolt diameter in inches) / 48].

Table C

Minimum Tension Values for High-Strength Fastener Assemblies	
Bolt Diameter (inches)	Minimum Tension (kips)
1/2	12
5/8	19
3/4	28
7/8	39
1	51
1-1/8	56
1-1/4	71
1-3/8	85
1-1/2	103

7. Turn the nut further to increase bolt tension until the rotation listed in Table B is reached. The rotation is measured from the heavy reference line made on the face plate after the bolt was snug-tight. Record this bolt tension.
8. Loosen and remove the nut and examine the threads on both the nut and bolt.

C. Long Bolt Acceptance Criteria:

1. An assembly shall pass the following requirements to be acceptable: (1) the measured moving torque (Step 6) shall be less than or equal to the calculated value, T (Step 6), (2) the bolt tension measured in Step 7 shall be greater than or equal to the applicable turn test tension value listed in Table D, (3) the nut shall be able to be removed from the bolt without signs of thread stripping or galling after the required rotation in Step 7 has been achieved, (4) the bolt does not shear from torsion or fail during the test, and (5) the assembly does not seize before the final rotation in Step 7 is reached. Elongation of the bolt in the threaded region between the bearing face of the nut and the underside of the bolt head is expected and will not be considered a

failure. Both fastener assemblies tested from one rotational capacity lot shall pass for the rotational capacity lot to be acceptable.

Table D

Turn Test Tension Values	
Bolt Diameter (inches)	Turn Test Tension (kips)
1/2	14
5/8	22
3/4	32
7/8	45
1	59
1-1/8	64
1-1/4	82
1-3/8	98
1-1/2	118

The following equipment, procedure, and acceptance criteria shall be used to perform rotational capacity tests on and determine acceptance of short bolts. Fasteners are considered to be short bolts when full nut thread engagement cannot be achieved when installed in a bolt tension measuring device:

A. Short Bolt Test Equipment:

1. Calibrated dial or digital torque wrench. Other suitable tools will be required for performing Steps 7 and 8 of the Short Bolt Test Procedure. A torque multiplier may be required for large diameter bolts.
2. Spud wrench or equivalent.
3. Spacer washers or bushings. When spacer washers or bushings are required, they shall have the same inside diameter and equal or larger outside diameter as the appropriate hardened washers conforming to the requirements in ASTM Designation: F 436.
4. Steel plate or girder with a hole to install bolt. The hole size shall be 1/16 inch greater than the nominal diameter of the bolt to be tested. The grip length, including any plates, washers, and additional spacers as needed, shall provide the proper number of threads within the grip, as required in Step 2 of the Short Bolt Test Procedure.

B. Short Bolt Test Procedure:

1. Measure the bolt length. The bolt length is defined as the distance from the end of the threaded portion of the shank to the underside of the bolt head.
2. Install the nut on the bolt so that 3 to 5 full threads of the bolt are located between the bearing face of the nut and the underside of the bolt head. Measure and record the thread stickout of the bolt. Thread stickout is determined by measuring the distance from the outer face of the nut to the end of the threaded portion of the shank.
3. Install the bolt into a hole on the plate or girder and install the required number of washers and additional spacers as needed between the bearing face of the nut and the

underside of the bolt head to produce the thread stickout measured in Step 2 of this procedure.

4. Tighten the nut using a hand wrench to a snug-tight condition. The snug condition shall be the full manual effort applied to the end of a 12-inch long wrench. This applied torque shall not exceed 20 percent of the maximum allowable torque in Table E.

Table E

Maximum Allowable Torque for High-Strength Fastener Assemblies	
Bolt Diameter (inches)	Torque (ft-lb)
1/2	145
5/8	285
3/4	500
7/8	820
1	1220
1-1/8	1500
1-1/4	2130
1-3/8	2800
1-1/2	3700

5. Match-mark the assembly by placing a heavy reference start line on the steel plate or girder which aligns with (1) a mark placed on one corner of the nut and (2) a radial line placed across the flat on the end of the bolt or on the exposed portions of the threads of tension control bolts. Place an additional mark on the outside of the socket that overlays the mark on the nut corner such that this mark will be visible while turning the nut. Make 2 additional small marks on the steel plate or girder, one 1/3 of a turn and one 2/3 of a turn clockwise from the heavy reference start line on the steel plate or girder.
6. Using the torque wrench, tighten the nut to the rotation value listed in Table F. The rotation is measured from the heavy reference line described in Step 5 made after the bolt was snug-tight. A second wrench shall be used to prevent rotation of the bolt head during tightening. Measure and record the moving torque after this rotation has been reached. The torque shall be measured with the nut in motion.

Table F

Nut Rotation Required for Turn-of-Nut Installation[(a) (,b)]	
Bolt Length (measured in Step 1)	Required Rotation (turn)
4 bolt diameters or less	1/3

(a) Nut rotation is relative to bolt, regardless of the element (nut or bolt) being turned. For bolts installed by 1/2 turn and less, the tolerance shall be plus or minus 30 degrees.
(b) Applicable only to connections in which all material within grip of the bolt is steel.

7. Tighten the nut further to the 2/3-turn mark as indicated in Table G. The rotation is measured from the heavy reference start line made on the plate or girder when the bolt was snug-tight. Verify that the radial line on the bolt end or on the exposed portions of the threads of tension control bolts is still in alignment with the start line.

Table G

Required Nut Rotation for Rotational Capacity Test	
Bolt Length (measured in Step 1)	Required Rotation (turn)
4 bolt diameters or less	2/3

8. Loosen and remove the nut and examine the threads on both the nut and bolt.

C. Short Bolt Acceptance Criteria:

1. An assembly shall pass the following requirements to be acceptable: (1) the measured moving torque from Step 6 shall be less than or equal to the maximum allowable torque from Table E, (2) the nut shall be able to be removed from the bolt without signs of thread stripping or galling after the required rotation in Step 7 has been achieved, (3) the bolt does not shear from torsion or fail during the test, and (4) the assembly shall not seize before the final rotation in Step 7 is reached. Elongation of the bolt in the threaded region between the bearing face of the nut and the underside of the bolt head will not be considered a failure. Both fastener assemblies tested from one rotational capacity lot shall pass for the rotational capacity lot to be acceptable.

INSTALLATION TENSION TESTING AND ROTATIONAL CAPACITY TESTING AFTER ARRIVAL ON THE JOB SITE

Installation tension tests and rotational capacity tests on high-strength fastener assemblies shall be performed by the Contractor prior to acceptance or installation and after arrival of the fastener assemblies on the project site. Installation tension tests and rotational capacity tests shall be performed at the job site, in the presence of the Engineer, on each rotational capacity lot of fastener assemblies.

The requirements of this section do not apply to high-strength cap screws or high-strength bolts used for slip base plates.

Installation tension tests shall be performed on 3 representative fastener assemblies in conformance with the provisions in Section 8, "Installation," of the RCSC Specification. For short bolts, Section 8.2, "Pretensioned Joints," of the RCSC Specification shall be replaced by the "Pre-Installation Testing Procedures," of the "Structural Bolting Handbook," published by the Steel Structures Technology Center, Incorporated.

The rotational capacity tests shall be performed in conformance with the requirements for rotational capacity tests in "Rotational Capacity Testing Prior to Shipment to Job Site" of these special provisions.

At the Contractor's expense, additional installation tension tests, tests required to determine job inspecting torque, and rotational capacity tests shall be performed by the Contractor on each rotational capacity lot, in the presence of the Engineer, if:

1. Any fastener is not used within 3 months after arrival on the job site,
2. Fasteners are improperly handled, stored, or subjected to inclement weather prior to final tightening,
3. Significant changes are noted in original surface condition of threads, washers, or nut lubricant, or

4. The Contractor's required inspection is not performed within 48 hours after all fasteners in a joint have been tensioned.

Failure of a job-site installation tension test or a rotational capacity test will be cause for rejection of unused fasteners that are part of the rotational capacity lot.

When direct tension indicators are used, installation verification tests shall be performed in conformance with Appendix Section X1.4 of ASTM Designation: F 959, except that bolts shall be initially tensioned to a value 5 percent greater than the minimum required bolt tension.

WELDING

The requirement of conformance with AWS D1.5 shall not apply to work conforming to Section 56-1, "Overhead Sign Structures," or Section 86-2.04, "Standards, Steel Pedestals and Posts," of the Standard Specifications.

MEASUREMENT AND PAYMENT

Full compensation for conforming to the requirements of this section shall be considered as included in the contract price paid for the various items of work involved_and no additional compensation will be allowed therefor.

10-1.37 CMU BLOCK WALL

DESCRIPTION

This work shall consist of constructing CMU block walls of masonry block. CMU block walls shall be supported on footings as shown on the plans.

CMU block wall, consisting of a reinforced hollow concrete masonry unit (CMU) block stem, shall be constructed in conformance with the provisions in Section 19, "Earthwork," Section 52, "Reinforcement," and Section 90, "Portland Cement Concrete," of the Standard Specifications and these special provisions.

CMU block wall masonry unit stems shall be constructed with joints of mortar. Wall stems shall be constructed with hand laid block. Wall stems shall not be constructed with preassembled panels.

Concrete for CMU block wall footings shall be minor concrete in conformance with Section 51, "Concrete Structures," of the Standard Specifications.

The angle of internal friction (ϕ) for the soils at CMU block wall is 30 degrees.

Concrete masonry units shall be hollow, load bearing, lightweight or medium weight class units conforming to the requirements in ASTM Designation: C 90. Standard or open-end units may be used. Open-end units, if used, shall not reduce the spacing of the bar reinforcement as shown on the plans.

The masonry units shall be nominal size and texture and of uniform color. The color shall be gray, selected from the manufacturer's standards. The top cap block shall match the shape of the existing CMU wall cap that is immediately south of the proposed CMU block wall as approved by the Engineer.

When high strength concrete masonry units with f'm=2500 psi are shown on the plans, the high strength masonry units shall have a minimum compressive strength of 3750 psi based on net area. When high strength concrete masonry units with f'm=2000 psi are shown on the plans, the high strength masonry units shall have a minimum compressive strength of 2800 psi based on net area. Each high strength concrete masonry unit shall be identified with a groove embedded in an interior corner. The groove shall extend from a mortar surface for a length of about 2 inches and shall have a depth of about 3/16 inch. When regular strength concrete masonry units with f'm=1500 psi are shown on the plans, the regular strength masonry units shall have a minimum compressive strength of 1900 psi based on net area.

Expansion joint filler shall conform to the requirements in ASTM Designation: D 1751 or ASTM Designation: D 2000 M2AA 805.

Mortar shall be colored to match the units. Coloring shall be chemically inert, fade resistant mineral oxide or synthetic type.

Cementitious material for wall stems shall conform to the provisions in Section 90-2.01, "Cementitious Materials," of the Standard Specifications.

Hydrated lime shall conform to the requirements in ASTM Designation: C 207, Type S.

Mortar sand shall be commercial quality.

Mortar for laying masonry units shall consist, by volume, of one part cementitious material, zero to 0.5 part hydrated lime, and 2.25 to 3 parts mortar sand. Sufficient water shall be added to make a workable mortar. Each batch of mortar shall be accurately measured and thoroughly mixed. Mortar shall be freshly mixed as required. Mortar shall not be retempered more than one hour after mixing.

Prepackaged mortar materials and mortar containing admixtures may be used when approved in writing by the Engineer, provided the mortar shall not contain more than 0.05 percent soluble chlorides when tested in conformance with California Test 422 nor more than 0.25 percent soluble sulfates, as SO_4, when tested in conformance with California Test 417.

Before laying masonry units using prepackaged mortar materials or mortar containing admixtures, the Contractor shall submit to the Engineer the proposed sources of the materials together with test data from an independent testing laboratory for mortar tested in conformance with California Test 551. The test data shall be from specimens having a moist cure, except that the sample shall not be immersed in lime water. The average 28-day compressive strength of the mortar shall be not less than 2500 psi.

Aggregate for grout used to fill masonry units shall consist of fine aggregate and coarse aggregate conforming to the provisions in Section 90-2.02, "Aggregates," of the Standard Specifications. At least 20 percent of the aggregate shall be coarse aggregate. The Contractor shall determine the grading except that 100 percent of the combined grading shall pass the 1/2-inch sieve.

At the option of the Contractor, grout for filling masonry units may be proportioned either by volume or weight. Grout shall contain only enough water to cause the grout to flow and fill the voids without segregation. The maximum amount of free water shall not exceed 0.7 times the weight of the cementitious material for regular strength masonry. The maximum amount of free water shall not exceed 0.6 times the weight of the cementitious material for high strength masonry.

Grout proportioned by volume for regular strength masonry shall consist of at least one part cementitious material and 4.5 parts aggregate. Grout proportioned by volume for high strength

masonry shall consist of at least one part cementitious material and 3.5 parts aggregate. Aggregate volumes shall be based on a loose, air-dry condition.

Grout proportioned by weight for regular strength masonry shall contain not less than 550 pounds of cementitious material per cubic yard. Grout proportioned by weight for high strength masonry shall contain not less than 675 pounds of cementitious material per cubic yard.

Reinforced concrete masonry unit wall stems shall be constructed with mortar joints in conformance with the following:

A. Concrete masonry unit construction shall be true and plumb in the lateral direction and shall conform to the grade shown on the plans in the longitudinal direction. Bond beam units or recesses for horizontal reinforcement shall be provided.
B. Mortar joints shall be approximately 3/8 inch wide. Walls and cross webs forming cells to be filled with grout shall be full bedded in mortar to prevent leakage of grout. All head and bed joints shall be solidly filled with mortar for a distance in from the face of the wall or unit not less than the thickness of the longitudinal face shells. Head joints shall be shoved tight.
C. Mortared joints around cells to be filled shall be placed so as to preserve the unobstructed vertical continuity of the grout filling. Any overhanging mortar or other obstruction or debris shall be removed from the inside of such cells.
D. Reinforcement shall be securely held in position at top and bottom with either wire ties or spacing devices and at intervals not exceeding 192 bar diameters before placing any grout. Wire shall be 16 gage or heavier. Wooden, aluminum, or plastic spacing devices shall not be used.
E. Splices in vertical reinforcement shall be made only at the locations shown on the plans.
F. Only those cells containing reinforcement shall be filled solidly with grout. All grout in the cells shall be consolidated at the time of placement by vibrating and reconsolidated after excess moisture has been absorbed but before plasticity is lost. Grout shall not be sliced with a trowel.
G. Walls shall be constructed in 4-foot maximum height lifts. Grouting of each lift shall be completed before beginning masonry unit construction for the next lift. The top course of each lift shall consist of a bond beam.
H. A construction joint shall be constructed at the top of the top course to permit placement of the cap block. The cap block connection shall be as approved by the Engineer.
I. Construction joints shall be made when the placing of grout, in grout filled cells, is stopped for more than one hour. The construction joint shall be approximately 1/2 inch below the top of the last course filled with grout.
J. Bond beams shall be continuous. The top of unfilled cells under horizontal bond beams shall be covered with metal or plastic lath.
K. When fresh masonry joins masonry that is partially or totally set, the contact surface shall be cleaned, roughened, and lightly wetted.
L. Surfaces of concrete on which the masonry walls are to be constructed shall be roughened and cleaned, exposing the aggregate, and shall be flushed with water and allowed to dry to a surface dry condition immediately before laying the masonry units.
M. Where cutting of masonry units is necessary, all cuts shall be made with a masonry saw to neat and true lines. Masonry units with cracking or chipping of the finished exposed surfaces will not be acceptable.

N. Masonry shall be protected in the same manner specified for concrete structures in Section 90-8, "Protecting Concrete," of the Standard Specifications and these special provisions.
O. During erection, all cells shall be kept dry in inclement weather by covering partially completed walls. The covering shall be waterproof fabric, plastic or paper sheeting, or other approved material. Wooden boards and planks shall not be used as covering materials. The covering shall extend down each side of masonry walls approximately 2 feet.
P. Splashes, stains, or spots on the exposed faces of the wall shall be removed.

ALTERNATIVE PROPRIETARY BLOCK WALL SYSTEMS

In lieu of the details provided on the plans and in these special provisions for a bar reinforced CMU block wall, the Contractor may propose to use a proprietary CMU block wall. The alternative CMU block wall shall conform to the lines and grades shown on the plans and shall match the appearance of the wall as shown on the plans, as specified herein and as approved by the Engineer.

Only one type of wall system shall be used for the entire length of each structure.

The Contractor shall submit the design and working drawings for any alternative proprietary wall system to the Engineer for approval in conformance with 5-1.02, “Plans and Working Drawings,” of the Standard Specifications. Working drawings for alternative block wall systems shall contain all information required for the proper construction of the system at each location. The working drawings shall include design parameters, material notes, and wall construction procedures and shall be accompanied with calculations. The working drawings and calculations shall be stamped and signed by an engineer who is registered as a Civil Engineer in the State of California.

The Contractor shall allow 4 weeks for review of the initial submittal of each alternative proprietary block wall system and 2 weeks for review of each subsequent submittal for the same wall system.

Unless otherwise specified, at the completion of each structure for which working drawings were submitted, the Contractor shall submit to the Engineer one set of corrected as-built prints 11" x 17" in size and on bond paper, showing as built conditions. As-built drawings that are common to more than one structure shall be submitted for each structure.

MEASUREMENT AND PAYMENT

CMU block walls of the types designated in the Engineer's Estimate will be measured by the square foot of the area of wall projected on a vertical plane between the elevation lines shown on the plans and length of wall (including the wall pilasters).

Regardless of the type of block wall actually constructed, block walls will be measured by the square foot of the area of wall projected on a vertical plane between the elevation lines shown on the plans and length of wall (including the wall pilasters-).

The contract price paid per square foot for CMU block wall of the types designated in the Engineer's Estimate shall include full compensation for furnishing all labor, materials, tools, equipment, and incidentals, and for doing all the work involved in constructing the CMU block wall, complete in place, including all pilasters, cap blocks and reinforcement, as shown on the plans, as specified in the Standard Specifications and these special provisions, and as directed by

the Engineer. CMU block wall supports will be measured and paid for as separate items of work.

CMU block wall footings will be measured and paid for as minor concrete (CMU block wall).

The contract price paid per cubic yard for minor concrete (CMU block wall) shall include full compensation for furnishing all labor, materials, tools, equipment, and incidentals, and for doing all the work involved in constructing the footings, complete in place, including excavation, backfill, and reinforcement, as shown on the plans, as specified in the Standard Specifications and these special provisions, and as directed by the Engineer.

For measurement and payment for CMU block wall and pedestals for monument sign, see "Reconstruct Monument Sign" in these special provisions.

10-1.38 ARCHITECTURAL FINISH (STONE VENEER)

Stone veneer shall be furnished and applied to concrete masonry block surfaces with a mortar bond coat as shown on the plans and in accordance with these special provisions.

MATERIALS

Stone veneer for facing shall be constructed from manufactured river rock of various sizes ranging in exposed surface area of 25 square inches to 250 square inches. Veneer units shall have a blend of natural tan, gray, buff and brown colors. Stone shall have a non-uniformly projecting face that varies in thickness from a minimum variation of ½ inch to a maximum of 2 inches in thickness variation within the individual rock pieces.

Stone pieces shall be placed with tight fit to provide 3/8 inch minimum thick mortar joints.

Mortar shall be a proprietary, premixed packaged blend of cement, lime, and sand, without color, that requires only water to prepare for use as stone mortar or grout and suitable for exterior applications. Packages of premix shall bear the manufacturer's name, brand, weight, and color identification. The manufacturer's recommended mixing proportions and procedures shall be furnished to the Engineer.

Grout shall be suitable latex modified thin-set for exterior use and shall conform to ANSI Standard: A118.4. As an alternative, a proprietary portland cement grout suitable for grouting quarry tile may be used.

PREPARING SURFACES

Surfaces of masonry block where stone veneer is to be placed shall be abrasive blasted or wire brushed to remove foreign substances.

BOND COAT

The bond coat shall be either dry set mortar or latex-portland cement mortar. Organic adhesive shall not be used for bond coat. The consistency of the mixture shall be such that ridges formed with the recommended notched trowel shall not flow or slump. Reworking will be allowed provided no water or materials are added. The cured setting bed shall be dampened before placing the bond coat, but the setting bed shall not be soaked.

The bond coat shall be floated onto the cured setting bed surface with sufficient pressure to cover the surface evenly with no bare spots. The surface area to be covered with bond coat shall be no greater than the area that can be covered with stone veneer while the bond coat is still

plastic. Bond coat shall be combed with a notched trowel within 10 minutes before installing stone veneer. Stone veneer shall not be installed on a skinned over mortar bond coat.

LAYING VENEER

Layout stones to achieve a balanced pattern of shapes, sizes, colors, thicknesses and textures. Stone veneer shall be installed from the top down to ensure a level top and to help keep the rock clean. Install corner pieces first. If corner pieces have a long and short return, alternate the direction of long returns on the wall corner.

Stone shall be installed with uniform size grout joints. Stagger joints to avoid long straight unbroken lines.

Stones that are trimmed to fit shall be oriented such that trimmed edges are not visible, such as placing cut edge on the bottom where rock is below eye level. Cover cut edges with mortar where possible.

The stone veneer units shall be back buttered with ½ inch layer of mortar immediately before installing the units and shall be firmly pressed into the freshly notched bond coat. Stone veneer units shall be lightly tapped or wiggled to obtain 100 percent coverage by mortar on the back of each unit.

Bond coat mortar that exudes into the grout spaces between and around stone veneer units shall be removed to the bottom of the unit. If mortar gets on the stone face, do not wipe it off, but allow the mortar to set until dry, and then brush off with a dry whisk broom.

Spacers, strings, ropes, pegs, glue, paper, and face mounting material shall be removed before grouting the veneer. Grouting shall not begin until at least 48 hours after installing veneer.

A maximum amount of grout shall be forced into the joints between and surrounding veneer units. The grout shall be tooled to a slightly concave cross section to a depth not less than 1/2 inch below the stone face.

The stone veneer shall be cured by keeping the veneer continuously damp for at least 72 hours after laying. Curing materials shall not stain the veneer, mortared joints, or surrounding concrete surfaces.

Surfaces of completed masonry, concrete, and other such materials exposed to view shall be protected from spillage, splatters, and other deposits of cementitious materials from masonry construction. All such deposits shall be removed without damage to the materials or exposed surfaces. Stains, efflorescence, laitance, splashes, or spots on the faces of masonry exposed to view shall be removed. Cleaning agents shall conform to the stone veneer manufacturer's recommendations. Abrasive blast cleaning methods will not be permitted on surfaces of veneer.

MEASUREMENT AND PAYMENT

Architectural finish (stone veneer) will be measured and paid for by the square foot.

The contract price paid per square foot for architectural finish (stone veneer) shall include full compensation for furnishing all labor, materials, tools, equipment, and incidentals and for doing all the work involved in stone veneer architectural finish, complete in place, as shown on the plans, as specified in the Standard Specifications and these special provisions, and as directed by the Engineer.

10-1.39 MONUMENT SIGN

Monument signs consisting of concrete foundation, CMU block structure, stone veneer, stucco finish, and lettering, shall be constructed as shown on the plans and in accordance with these special provisions.

GENERAL

Reinforced concrete footing and CMU block structure shall conform to the provisions for CMU Block Wall provided in these special provisions, except that the provisions for Alternative Proprietary Block Wall Systems shall not apply for the monument signs.

Stone veneer for facing shall conform to the provisions for Architectural Finish (Stone Veneer) provided in these special provisions.

Lintel block shall have manufactured block to simulate cut white marble. The lintel block shall be mortared to the structure per manufacturer's recommendations.

SMOOTH STUCCO FINISH

Smooth stucco finish shall consist of applying a tan colored Portland cement plaster the CMU block as shown on the plans and as specified herein.

Plaster shall be 3 coat work. The total thickness of plaster shall be 13 mm unless otherwise shown on the plans. The color and the surface finish shall be as shown on the plans.

Stucco plaster shall consist of lean commercial quality plaster sand, cement, lime and coloring agent.

Cement shall be portland cement, blended hydraulic cement, or portland cement with a maximum of 15 percent mineral admixture. Portland cement shall be Type II, conforming to ASTM Designation: C 150. Blended hydraulic cement shall be Type IP, conforming to ASTM Designation: C 595. Mineral admixture shall be Class N, Class F or Class C, conforming to ASTM Designation: C 618, except loss on ignition shall not exceed 4 percent.

Lime shall conform to ASTM Designation: C 206.

Color for plaster shall be non-fading, sunproof, and limeproof fine ground synthetic mineral oxide.

A premixed portland cement plaster shall be a premixed packaged blend of cement, lime and sand, with or without color, that requires only water to prepare for use as portland cement plaster, may be furnished. Premixed plaster shall be proportioned as specified herein. Packages of premix shall bear the manufacturer's name, brand, weight and color identification.

Water shall be potable.

PLASTER PROPORTIONING AND MIXING.--Materials shall be accurately proportioned and measured for each batch. All batches for a given coat shall be proportioned the same. Plaster shall be proportioned one part cement to between 3 and 5 parts sand by volume, only sufficient water to obtain a workable mix, and a lime plasticizing agent. Not more than 9 kg of dry hydrated lime or lime putty per sack of cement shall be used in the first and second plaster coat. Plaster for finish coat shall contain not more than 42 kg of dry hydrated lime or lime putty per sack of cement. Lime shall not be used if mineral admixture or blended hydraulic cement is used.

All plaster mixing ingredients shall be mixed in a mechanical mixer. After all ingredients are in the mixer, the plaster shall be mixed for a minimum of 2 minutes. The mixture shall be

uniform in color after mixing. Hand mixing of plaster will be allowed only with the written approval of the Engineer.

Plaster to be colored shall be colored by mixing the coloring ingredient uniformly and homogeneously into the plaster. Color, if used, will be required only in materials for the finish coat.

PLASTER APPLICATION.--Plaster shall not be applied if the ambient temperature is 4°C or less. Plaster shall not be applied to frost covered or frozen surfaces. Surfaces to receive plaster shall be clean.

The coats of plaster shall be applied continuously in one general direction without allowing mortar to dry at the edges.

The first coat shall be applied with sufficient material and pressure to form full keys and good bond and to cover surfaces. Before setting, the first coat shall be cross-scratched to receive the second coat. The first coat shall be moisture cured, without soaking, for not less than 48 hours after application or until covered by the second coat.

The second coat of plaster shall not be placed until the first coat of plaster has set thoroughly or until at least 12 hours after the first coat of plaster has been placed. The second coat shall be brought out to grounds, straightened to a true, even surface, roughened to assure a bond with the finish coat, and made free of imperfections which would reflect in the finish coat. The second coat shall be moisture cured, without soaking, for not less than 48 hours after application.

The third coat of plaster shall not be placed until at least 7 days after the second coat of plaster has been placed. Troweling of the third coat of plaster shall leave the surface smooth and free from rough areas, trowel marks, checks, or other blemishes. The finished surface shall be true and even and shall not vary more than 3 millimeters in 1.5 meters from the required plane. Plaster with cracks, blisters, pits, stains, efflorescence, shadowing, dryouts, or checks will not be accepted. Surfaces shall be clean and sound.

The third coat shall have the type of finish shown on the plans.

After all other related work has been completed, pointing around trim and set work and repairing of damaged portions of plaster shall be done. Repairs and patching shall match surrounding work in texture and appearance.

Plaster coats shall be protected against freezing for a period of 24 hours after application.

LETTERING

Lettering shall be salvaged from the existing monument signs and reattached to the stucco surface of the new monument sign.

MEASUREMENT AND PAYMENT

The contract price paid per each monument sign shall include full compensation for furnishing all labor, materials, tools, equipment, and incidentals and for doing all the work involved in constructing each monument sign, complete in place, including earthwork for footing construction and backfill, footing concrete, bar reinforcing steel, CMU blocks and cap block, stucco finish and lettering, as shown on the plans, as specified in the Standard Specifications and these special provisions, and as directed by the Engineer.

Stone veneer shall be measured and paid for as Architectural Finish (Stone Veneer) as specified elsewhere in these special provisions.

10-1.40 ROADSIDE SIGNS

Roadside signs shall be furnished and installed at the locations shown on the plans or where designated by the Engineer and in conformance with the provisions in Section 56-2, "Roadside Signs," of the Standard Specifications and these special provisions.

The Contractor shall furnish roadside sign panels in conformance with the provisions in "Furnish Sign" of these special provisions.

Wood posts shall be pressure treated after fabrication in conformance with the provisions in Section 58, "Preservative Treatment of Lumber, Timber and Piling," of the Standard Specifications and AWPA Use Category System: UC4A, Commodity Specification A or B.

10-1.41 FURNISH SIGN

Signs shall be fabricated and furnished in accordance with details shown on the plans, the Traffic Sign Specifications, and these special provisions.

Traffic Sign Specifications for California sign codes are available for review at:

http://www.dot.ca.gov/hq/traffops/signtech/signdel/specs.htm

Traffic Sign Specifications for signs referenced with Federal MUTCD sign codes can be found in Standard Highway Signs Book, administered by the Federal Highway Administration, which is available for review at:

http://mutcd.fhwa.dot.gov/ser-shs_millennium.htm

Information on cross-referencing California sign codes with the Federal MUTCD sign codes is available at:

http://www.dot.ca.gov/hq/traffops/signtech/signdel/specs.htm

Temporary or permanent signs shall be free from blemishes that may affect the serviceability and detract from the general sign color and appearance when viewing during daytime and nighttime from a distance of 25 feet. The face of each finished sign shall be uniform, flat, smooth, and free of defects, scratches, wrinkles, gel, hard spots, streaks, extrusion marks, and air bubbles. The front, back, and edges of the sign panels shall be free of router chatter marks, burns, sharp edges, loose rivets, delaminated skins, excessive adhesive over spray and aluminum marks.

QUALITY CONTROL FOR SIGNS

The requirements of "Quality Control for Signs" in this section shall not apply to construction area signs.

No later than 14 days before sign fabrication, the Contractor shall submit a written copy of the quality control plan for signs to the Engineer for review. The Engineer will have 10 days to review the quality control plan. Sign fabrication shall not begin until the Engineer approves the Contractor's quality control plan in writing. The Contractor shall submit to the Engineer at least 3 copies of the approved quality control plan. The quality control plan shall include, but not be limited to the following requirements:

A. Identification of the party responsible for quality control of signs,
B. Basis of acceptance for incoming raw materials at the fabrication facility,
C. Type, method and frequency of quality control testing at the fabrication facility,
D. List (by manufacturer and product name) of process colors, protective overlay film, retroreflective sheeting and black non-reflective film,
E. Recommended cleaning procedure for each product, and
F. Method of packaging, transport and storage for signs.

No legend shall be installed at the project site. Legend shall include letters, numerals, tildes, bars, arrows, route shields, symbols, logos, borders, artwork, and miscellaneous characters. The style, font, size, and spacing of the legend shall conform to the Standard Alphabets published in the FHWA Standard Highway Signs Book. The legend shall be oriented in the same direction in accordance with the manufacturer's orientation marks found on the retroreflective sheeting.

On multiple panel signs, legend shall be placed across joints without affecting the size, shape, spacing, and appearance of the legend. Background and legend shall be wrapped around interior edges of formed panel signs as shown on plans to prevent delamination.

The following notation shall be placed on the lower right side of the back of each sign where the notation will not be blocked by the sign post or frame:

A. PROPERTY OF STATE OF CALIFORNIA,
B. Name of the sign manufacturer,
C. Month and year of fabrication,
D. Type of retroreflective sheeting, and
E. Manufacturer's identification and lot number of retroreflective sheeting.

The above notation shall be applied directly to the aluminum sign panels in 1/4-inch upper case letters and numerals by die-stamp and applied by similar method to the fiberglass reinforced plastic signs. Painting, screening, or engraving the notation will not be allowed. The notation shall be applied without damaging the finish of the sign.

Signs with a protective overlay film shall be marked with a dot of 3/8 inch in diameter. The dot placed on white border shall be black, while the dot placed on black border shall be white. The dot shall be placed on the lower border of the sign before application of the protective overlay film and shall not be placed over the legend and bolt holes. The application method and exact location of the dot shall be determined by the manufacturer of the signs.

For sign panels that have a minor dimension of 48 inches or less, no splice will be allowed in the retroreflective sheet except for the splice produced during the manufacturing of the retroreflective sheeting. For sign panels that have a minor dimension greater than 48 inches, only one horizontal splice will be allowed in the retroreflective sheeting.

Unless specified by the manufacturer of the retroreflective sheeting, splices in retroreflective sheeting shall overlap by a minimum of one inch. Splices shall not be placed within 2 inches from edges of the panels. Except at the horizontal borders, the splices shall overlap in the direction from top to bottom of the sign to prevent moisture penetration. The retroreflective sheeting at the overlap shall not exhibit a color difference under the incident and reflected light.

Signs exhibiting a significant color difference between daytime and nighttime shall be replaced immediately.

Repairing sign panels will not be allowed except when approved by the Engineer.

The Department will inspect signs at the Contractor's facility and delivery location, and in accordance with Section 6, "Control of Materials," of the Standard Specifications. The Engineer will inspect signs for damage and defects before and after installation.

Regardless of kind, size, type, or whether delivered by the Contractor or by a common carrier, signs shall be protected by thorough wrapping, tarping, or other methods to ensure that signs are not damaged by weather conditions and during transit. Signs shall be dry during transit and shipped on palettes, in crates, or tier racks. Padding and protective materials shall be placed between signs as appropriate. Finished sign panels shall be transported and stored by method that protects the face of signs from damage. The Contractor shall replace wet, damaged, and defective signs.

Signs shall be stored in dry environment at all times. Signs shall not rest directly on the ground or become wet during storage. Signs, whether stored indoor or outdoor, shall be free standing. In areas of high heat and humidity signs shall be stored in enclosed climate-controlled trailers or containers. Signs shall be stored indoor if duration of the storage will exceed 30 days.

Screen processed signs shall be protected, transported and stored as recommended by the manufacturer of the retroreflective sheeting.

When requested, the Contractor shall provide the Engineer test samples of signs and materials used at various stages of production. Sign samples shall be 12" x 12" in size with applied background, letter or numeral, and border strip.

The Contractor shall assume the costs and responsibilities resulting from the use of patented materials, equipment, devices, and processes for the Contractor's work.

SHEET ALUMINUM

Alloy and temper designations for sheet aluminum shall be in accordance with ASTM Designation: B 209.

The Contractor shall furnish the Engineer a Certificate of Compliance in conformance with Section 6-1.07, "Certificates of Compliance," of the Standard Specifications for the sheet aluminum.

Sheet aluminum shall be pretreated in accordance to ASTM Designation: B 449. Surface of the sheet aluminum shall be cleaned, deoxidized, and coated with a light and tightly adherent chromate conversion coating free of powdery residue. The conversion coating shall be Class 2 with a weight between 10 milligrams per square foot and 35 milligrams per square foot, and an average weight of 25 milligrams per square foot. Following the cleaning and coating process, the sheet aluminum shall be protected from exposure to grease, oils, dust, and contaminants.

Sheet aluminum shall be free of buckles, warps, dents, cockles, burrs, and defects resulting from fabrication.

Base plate for standard route marker shall be die cut.

RETROREFLECTIVE SHEETING

The Contractor shall furnish retroreflective sheeting for sign background and legend in conformance with ASTM Designation: D 4956 and "Prequalified and Tested Signing and Delineation Materials" of these special provisions.

Retroreflective sheeting shall be applied to sign panels as recommended by the retroreflective sheeting manufacturer without stretching, tearing, and damage.

Class 1, 3, or 4 adhesive backing shall be used for Type II, III, IV, VII, VIII, and IX retroreflective sheeting. Class 2 adhesive backing may also be used for Type II retroreflective sheeting. The adhesive backing shall be pressure sensitive and fungus resistant.

When the color of the retroreflective sheeting determined from instrumental testing is in dispute, the Engineer's visual test will govern.

PROCESS COLOR AND FILM

The Contractor shall furnish and apply screened process color, non-reflective opaque black film, and protective overlay film of the type, kind, and product that are approved by the manufacturer of the retroreflective sheeting.

The Contractor shall furnish the Engineer a Certificate of Compliance in accordance to Section 6-1.07, "Certificates of Compliance," of the Standard Specifications for the screened process color, non-reflective opaque black film, and protective overlay film.

The surface of the screened process color shall be flat and smooth. When the screened process colors determined from the instrumental testing in accordance to ASTM Designation: D 4956 are in dispute, the Engineer's visual test will govern.

The Contractor shall provide patterns, layouts, and set-ups necessary for the screened process.

The Contractor may use green, red, blue, and brown reverse-screened process colors for background and non-reflective opaque black film or black screened process color for legend. The coefficient of retroreflection for reverse-screened process colors on white retroreflective sheeting shall not be less than 70 percent of the coefficient of retroreflection specified in ASTM Designation: D 4956.

The screened process colors and non-reflective opaque black film shall have the same outdoor weatherability as that of the retroreflective sheeting.

After curing, screened process colors shall withstand removal when tested by applying 3M Company Scotch Brand Cellophane Tape No. 600 or equivalent tape over the color and removing with one quick motion at 90° angle.

SINGLE SHEET ALUMINUM SIGN

Single sheet aluminum signs shall be fabricated and furnished with or without frame. The Contractor shall furnish the sheet aluminum in accordance to "Sheet Aluminum" of these special provisions. Single sheet aluminum signs shall be fabricated from sheet aluminum alloy 6061-T6 or 5052-H38.

Single Sheet aluminum signs shall not have a vertical splice in the sheet aluminum. For signs with depth greater than 48 inches, one horizontal splice will be allowed in the sheet aluminum.

Framing for single sheet aluminum signs shall consist of aluminum channel or rectangular aluminum tubing. The framing shall have a length tolerance of ±1/8 inch. The face sheet shall be affixed to the frame with rivets of 3/16-inch diameter. Rivets shall be placed within the web of channels and shall not be placed less than 1/2 inch from edges of the sign panels. Rivets shall be made of aluminum alloy 5052 and shall be anodized or treated with conversion coating to prevent corrosion. The exposed portion of rivets on the face of signs shall be the same color as the background or legend where the rivets are placed.

Finished signs shall be flat within a tolerance of ±1/32 inch per linear foot when measured across the plane of the sign in all directions. The finished signs shall have an overall tolerance within ±1/8 inch of the detailed dimensions.

Aluminum channels or rectangular aluminum tubings shall be welded together with the inert gas shielded-arc welding process using E4043 aluminum electrode filler wires as shown on the plans. Width of the filler shall be equal to wall thickness of smallest welded channel or tubing.

MEASUREMENT AND PAYMENT

Furnishing signs (except for construction area signs) will be measured by the square foot and the quantity to be paid for will be the total area, in square feet, of the sign panel types installed in place.

The contract price paid per square foot for furnish sign of the types specified in the Engineer's estimate shall include full compensation for furnishing all labor, materials, tools, equipment, and incidentals, and for doing all the work involved in fabricating and furnishing the signs, including removable sign panel frame and fastening hardware, as shown on the plans, as specified in the Standard Specifications and these special provisions, and as directed by the Engineer.

Full compensation for furnishing and installing protective overlay on signs shall be considered as included in the contract price paid per square foot for furnish sign of the various types and no separate payment will be made therefor.

10-1.42 PLASTIC PIPE

Plastic pipe shall conform to the provisions in Section 64, "Plastic Pipe," of the Standard Specifications and these special provisions.

10-1.43 OVERSIDE DRAINS

Tapered inlets, pipe stake anchor assemblies, and flume downdrains shall conform to the provisions in Section 69, "Overside Drains," of the Standard Specifications and these special provisions.

At the option of the Contractor, tapered inlets and flume downdrains shall be fabricated of corrugated steel or corrugated aluminum.

Corrugated steel or corrugated aluminum tapered inlets and flume downdrains, whichever is furnished, will be paid for at the contract unit price for tapered inlets and at the contract price per linear foot for flume downdrains of the sizes shown in the Engineer's Estimate.

10-1.44 MISCELLANEOUS FACILITIES

Storm drainage system flared end sections, drainage inlets, manholes and risers shall conform to the provisions in Section 70, "Miscellaneous Facilities," of the Standard Specifications and these special provisions.

10-1.45 INLET DEPRESSION

This work consists of constructing inlet depressions around drainage inlets.

Asphalt concrete used in the construction of inlet depressions in shoulder areas of roadways shall conform to the requirements for asphalt concrete shoulder in Section 39, "Asphalt Concrete," of the Standards Specifications.

.

Full compensation for forming and constructing inlet depression, including any necessary soil compaction or disposal of forming materials shall be considered as included in the contract price paid per cubic yard for minor concrete (minor structure) and no additional compensation will be allowed therefor.

10-1.46 SLOPE PROTECTION

Slope protection shall be placed or constructed in conformance with the provisions in Section 72, "Slope Protection," of the Standard Specifications and these special provisions.

Rock slope protection fabric shall be woven or nonwoven type fabric, Type A or Type B, at the option of the Contractor.

10-1.47 MISCELLANEOUS CONCRETE CONSTRUCTION

Minor Concrete (curb, curb and gutter, sidewalks and curb ramp) shall conform to the provisions in Section 73, "Concrete Curbs and Sidewalks," of the Standard Specifications and these special provisions.

Curb ramp detectable warning surface shall consist of raised truncated domes constructed or installed on curb ramps in conformance with the details shown on the plans and these special provisions. At the option of the Contractor, the detectable warning surface shall be prefabricated, cast-in-place, or stamped into the surface of the curb ramp. The color of the detectable warning surface shall be yellow conforming to Federal Standard 595B, Color No. 33538.

Prefabricated detectable warning surface shall be in conformance with the requirements established by the Department of General Services, Division of State Architect and be attached in conformance with the manufacturer's recommendations.

Cast-in-place and stamped detectable warning surfaces shall be painted in conformance with the provisions in Section 59-6, "Painting Concrete," of the Standard Specifications.

The finished surfaces of the detectable warning surface shall be free from blemishes.

Prior to constructing the cast-in-place or stamping the detectable warning surface, the Contractor shall demonstrate the ability to produce a detectable warning surface conforming to the details shown on the plans and these special provisions by constructing a 24" x 24" test panel.

The manufacturer shall provide a written 5-year warranty for prefabricated detectable warning surfaces, guaranteeing replacement when there is defect in the dome shape, color fastness, sound-on-cane acoustic quality, resilience, or attachment. The warranty period shall begin upon acceptance of the contract.

Full compensation for constructing or furnishing and installing curb ramp detectable warning surfaces shall be considered as included in the contract price paid per cubic yard for minor concrete (curb ramp) and no separate payment will be made therefor.

10-1.48 MISCELLANEOUS IRON AND STEEL

Miscellaneous iron and steel shall conform to the provisions in Section 75, "Miscellaneous Metal," of the Standard Specifications.

10-1.49 WOOD FENCE

Wood fence shall conform to the provisions in Section 80, "Fences," of the Standard Specifications and these special provisions.

The fence material shall be constructed with identical materials and with the same size member as the existing fence that is being replaced or extended. Fence shall be painted, as needed, to match adjacent fence.

10-1.50 TYPE BW AND TYPE WM FENCE

Type BW and Type WM fence shall conform to the provisions in Section 80, "Fences," of the Standard Specifications and these special provisions.

The fence material shall be fastened to metal posts. Metal posts shall be painted a green color.

10-1.51 MARKERS AND DELINEATORS

Markers and delineators shall conform to the provisions in Section 82, "Markers and Delineators," of the Standard Specifications and these special provisions.

Markers and delineators on flexible posts shall conform to the provisions in "Prequalified and Tested Signing and Delineation Materials" of these special provisions. Flexible posts shall be made from a flexible white plastic which shall be resistant to impact, ultraviolet light, ozone, and hydrocarbons. Flexible posts shall resist stiffening with age and shall be free of burns, discoloration, contamination, and other objectionable marks or defects which affect appearance or serviceability.

Retroreflective sheeting for metal and flexible target plates shall be the retroreflective sheeting designated for channelizers, markers, and delineators conforming to the requirements in ASTM Designation: D 4956-95 and in conformance with the provisions in "Prequalified and Tested Signing and Delineation Materials" of these special provisions.

10-1.52 THERMOPLASTIC TRAFFIC STRIPE AND PAVEMENT MARKING

Thermoplastic traffic stripes (traffic lines) and pavement markings shall be applied in conformance with the provisions in Section 84, "Traffic Stripes and Pavement Markings," of the Standard Specifications and these special provisions.

Thermoplastic material shall be free of lead and chromium, and shall conform to the requirements in State Specification PTH-02ALKYD.

Retroreflectivity of the thermoplastic traffic stripes and pavement markings shall conform to the requirements in ASTM Designation: D 6359-99. White thermoplastic traffic stripes and pavement markings shall have a minimum initial retroreflectivity of 250 mcd m^{-2} lx^{-1}. Yellow thermoplastic traffic stripes and pavement markings shall have a minimum initial retroreflectivity of 150 mcd m^{-2} lx^{-1}.

Where striping joins existing striping, as shown on the plans, the Contractor shall begin and end the transition from the existing striping pattern into or from the new striping pattern a sufficient distance to ensure continuity of the striping pattern.

Thermoplastic traffic stripes shall be applied at the minimum thickness and application rate as specified below. The minimum application rate is based on a solid stripe of 4 inches in width.

Minimum Stripe Thickness (inch)	Minimum Application Rate (lb/ft)
0.079	0.27
0.098	0.34

Thermoplastic traffic stripes and pavement markings shall be free of runs, bubbles, craters, drag marks, stretch marks, and debris.

10-1.53 PAVEMENT MARKERS

Pavement markers shall be placed in conformance with the provisions in Section 85, "Pavement Markers," of the Standard Specifications and these special provisions.

Attention is directed to "Traffic Control System For Lane Closure" of these special provisions regarding the use of moving lane closures during placement of pavement markers with bituminous adhesive.

The Contractor shall furnish the Engineer certificates of compliance for the pavement markers in conformance with the provisions in Section 6-1.07, "Certificates of Compliance," of the Standard Specifications.

Retroreflective pavement markers shall be marked as abrasion resistant on the body of the markers.

SECTION 10-2 HIGHWAY PLANTING AND IRRIGATION SYSTEMS

10-2.01 GENERAL

The work performed in connection with highway planting and irrigation systems shall conform to the provisions in Section 20, "Erosion Control and Highway Planting," of the Standard Specifications and these special provisions.

The Contractor shall notify the Engineer not less than 72 hours prior to requiring initial access to the existing irrigation controllers. When the Engineer determines that access to the controllers is required at other times, arrangements will be made to provide this access.

When fluctuations of water pressure and water supply are encountered during normal working hours, plants shall be watered at other times, as often, and in sufficient amounts as conditions may require to keep the soil and plant roots moist during the life of the contract.

Full compensation for watering plants outside normal working hours shall be considered as included in the contract lump sum prices paid for highway planting and plant establishment work and no additional compensation will be allowed therefor.

PROGRESS INSPECTIONS

Progress inspections will be performed by the Engineer for completed highway planting and irrigation system work at designated stages during the life of the contract.

Progress inspections will not relieve the Contractor of responsibility for installation in conformance with the special provisions, plans and Standard Specifications. Work within an area shall not progress beyond each stage until the inspection has been completed, corrective work has been performed, and the work is approved, unless otherwise permitted by the Engineer.

The requirements for progress inspections will not preclude additional inspections of work by the Engineer at other times during the life of the contract.

The Contractor shall notify the Engineer, in writing, at least 4 working days prior to completion of the work for each stage of an area and shall allow a minimum of 3 working days for the inspection.

Progress inspections will be performed at the following stages of work:

A. During pressure testing of the pipelines on the supply side of control valves.
B. During testing of low voltage conductors.
C. Before planting begins and after completion of the work specified for planting in Section 20-4.03, "Preparing Planting Areas," of the Standard Specifications.
D. Before plant establishment work begins and after completion of the work specified for planting in Section 20-4.05, "Planting," of the Standard Specifications.
E. At intervals of one month during the plant establishment period.

10-2.02 EXISTING HIGHWAY PLANTING

In addition to the provisions in Section 20, "Erosion Control and Highway Planting," of the Standard Specifications, work performed in connection with existing highway planting shall conform to the provisions in "Existing Highway Facilities," of these special provisions.

Replacement planting shall conform to the provisions in "Preservation of Property" of these special provisions.

10-2.03 EXISTING HIGHWAY IRRIGATION FACILITIES

The work performed in connection with the various existing highway irrigation system facilities shall conform to the provisions in "Existing Highway Facilities," of these special provisions.

Water shall be maintained in conformance with the provisions in Section 20-5.025, "Maintain Existing Water Supply," of the Standard Specifications.

LOCATE EXISTING CROSSOVERS AND CONDUITS

Existing crossovers and conduits shown on the plans to be incorporated in the new work shall be located in conformance with the provisions for locating conduits in Section 20-5.03B, "Conduit for Irrigation Crossovers," of the Standard Specifications.

Unless otherwise directed by the Engineer, existing crossovers and conduits shown on the plans to be incorporated in the new work shall be located prior to performing work on irrigation systems.

If debris is encountered in the ends of conduits, the debris shall be removed prior to performing other work in the conduits. Removal of debris within the first 3 feet in these conduits shall be at the Contractor's expense. If debris is encountered in the conduits more than 3 feet from the ends of the conduits, the additional debris shall be removed as directed by the Engineer and the removal work will be paid for as extra work as provided in Section 4-1.03D,"Extra Work," of the Standard Specifications.

10-2.04 HIGHWAY PLANTING

The work performed in connection with highway planting shall conform to the provisions in Section 20-4, "Highway Planting," of the Standard Specifications and these special provisions.

HIGHWAY PLANTING MATERIALS

Mulch

Mulch shall consist of either wood chips or tree bark or a combination of both.

Commercial Fertilizer (Granular) for Planting Work

Commercial fertilizer (granular) for planting work shall be a pelleted or granular form and shall fall within 20 percent of the following guaranteed chemical analysis:

Ingredient	Percentage
Nitrogen	16
Phosphoric Acid	6
Water Soluble Potash	8

Commercial Fertilizer (Granular) for Plant Establishment Period

Commercial fertilizer (granular) for plant establishment period shall be a pelleted or granular form and shall fall within 20 percent of the following guaranteed chemical analysis:

Ingredient	Percentage
Nitrogen	21
Phosphoric Acid	6
Water Soluble Potash	0

Commercial Fertilizer (Packets)

Commercial fertilizer (packet) shall be slow or controlled release and shall be in a biodegradable packet form. The packet shall gradually release nutrients over a 12-month period. Each packet shall have a weight of 10 g ± 1 g and shall have the following guaranteed chemical analysis:

Ingredient	Percentage
Nitrogen	20
Phosphoric Acid	10
Water Soluble Potash	5

PESTICIDES

Pesticides used to control weeds shall conform to the provisions in Section 20-4.026, "Pesticides," of the Standard Specifications. Except as otherwise provided in these special provisions, pesticide use shall be limited to the following materials:

Cacodylic Acid

Diquat
Fluazifop-butyl
Glyphosate
Isoxaben (Preemergent)
Sethoxydim
Oxadiazon - 50 percent WP (Preemergent)
Oryzalin (Preemergent)
Pendimethalin (Preemergent)
Prodiamine (Preemergent)
Trifluralin (Preemergent)
Napropamide (Preemergent)

Granular preemergents may be used when applied to areas that will be covered with mulch, excluding plant basins. Granular preemergents shall be limited to the following materials:

Dichlobenil (Preemergent)
Oxadiazon (Preemergent)

Granular preemergents shall be applied prior to the application of mulch. Mulch applications shall be completed in these areas on the same working day. Photosensitive dye will not be required.

Glyphosate shall be used to kill stolon type weeds.

Oxadiazon shall be of the emulsifiable concentration or wettable powder type, except when Oxadiazon is used under mulch in conformance with these special provisions.

Prior to the application of preemergents, ground cover plants shall have been planted a minimum of 3 days and shall have been thoroughly watered.

A minimum of 100 days shall elapse between applications of preemergents.

Except for ground cover plants, preemergents shall not be applied within 18 inches of plants or within wild flower seeding areas.

If the Contractor elects to request the use of other pesticides on this project, the request shall be submitted, in writing, to the Engineer not less than 15 days prior to the intended use of the other pesticides. Except for the pesticides listed in these special provisions, no pesticides shall be used or applied without prior written approval of the Engineer.

PREPARING PLANTING AREAS

Plants adjacent to drainage ditches shall be located so that, after construction of the basins, no portion of the basin walls shall be less than 3 feet from the flow line of graded ditches or less than 2 feet from the edge of paved ditches.

PLANTING

Backfill material for plant holes shall be a mixture of soil, soil conditioner, agricultural lime, planting tablets, and soil amendment. The quantity of the backfill material shall be as follows: 3 parts soil, by volume, 1 part nitrolized shaving or good quality compost, by volume, 7.3 Kgs Gro-Power Plus with M, and planting packets... Soil amendment shall conform to the provisions in Section 20-2.03, "Soil Amendment," of the Standard Specifications. Backfill material shall be

thoroughly mixed and uniformly distributed throughout the entire depth of the plant hole without clods and lumps.

Commercial fertilizer packets shall be placed in the backfill of each plant at the time of planting and at the rate shown on the Plant List to within 6 inches to 8 inches of the soil surface and approximately one inch from the roots. When more than one fertilizer packet is required per plant, the packets shall be distributed evenly around the root ball.

A granular preemergent shall be applied to areas to be covered with mulch outside of plant basins in conformance with the provisions in "Pesticides" of these special provisions.

Mulch placed in areas outside of plant basins shall be spread to a uniform depth of 3 inches.

Mulch shall be spread from the outside of the proposed plant basin to the adjacent edges of shoulders, dikes, curbs, sidewalks, walls, fences, and existing plantings. If the proposed plant material is 12 feet or more from the adjacent edges of shoulders, dikes, curbs, sidewalks, walls, fences, and other existing plantings, the mulch shall be spread to the outside edge of the shoulder, dikes curbs, sidewalks, walls, fences, etc.

Mulch shall not be placed within 3 feet of the centerline of earthen drainage ditches, within 3 feet of the edge of paved ditches, and within 3 feet of the centerline of drainage flow lines.

Attention is directed to "Irrigation Systems Functional Test" of these special provisions regarding functional tests of the irrigation systems. Planting shall not be performed in an area until the functional test has been completed for the irrigation system serving that area.

PLANT ESTABLISHMENT WORK

The plant establishment period for highway planting shall be Type 2 and shall not be less than **90** working days.

Attention is directed to "Relief From Maintenance and Responsibility" in these special provisions regarding relief from maintenance and protection.

Commercial fertilizer (granular) shall be applied to trees, shrubs, vines and ground cover monthly throughout the Plant Establishment Period. Commercial fertilizer shall be applied at the rate of 5 lbs per 1,000 square feet and shall be spread with a mechanical spreader wherever possible.

During the plant establishment period, the plants shall be watered utilizing the Remote Irrigation Control System (RICS) software program. A watering schedule shall be submitted to the Engineer for use during the plant establishment period.

Weeds within plant basins, including basin walls and ground cover, shall be controlled by hand pulling.

Weeds within mulched and ground cover areas and outside of plant basins shall be controlled by killing.

Weeds outside of mulched areas, plant basins, ground cover, the median, and paved areas shall be controlled by mowing. At locations where proposed planting areas are 12 feet or more from the edges of existing plantings to remain and from shoulders, dikes, curbs, sidewalks, fences, and walls, the mowing limit shall be 6 feet beyond the outer limits of the proposed planting area.

Weeds within median areas, pavement, curbs, sidewalk, and other surfaced areas shall be controlled by killing.

Except as specified in these special provisions, disposal of mowed material will be required unless instructed otherwise by the Engineer. Disposal of mowed material shall be included as part of Plant Establishment Work and no extra payment shall be allowed thereafter.

At the option of the Contractor, plants of a larger container size than those originally specified may be used for replacement plants during the first 60 working days of the plant establishment period. The use of plants of a larger container size than those originally specified for replacement plants shall be at the Contractor's expense. After 60 working days into the plant establishment, Contractor shall arrange an on-site meeting to inspect the condition of the plant material. After 60 working days, any dead plants requiring replacement shall be maintained for an additional 60 working days of maintenance, beyond the scheduled end of the plant establishment period. 60 working days into the 90 working day Plant Establishment Period, dead plants shall be replaced and the Plant Establishment Period extended 90 days, beyond the scheduled end of the plant establishment period.

When ordered by the Engineer, one application of a preemergent pesticide conforming to the provisions in "Pesticides" of these special provisions, shall be applied between 40 working days and 50 working days prior to completion of the plant establishment period. This work will be paid for as extra work as provided in Section 4-1.03D,"Extra Work," of the Standard Specifications.

Wye strainers shall be cleaned at least 15 days prior to the completion of the plant establishment period.

The final inspection shall be performed in conformance with the provisions in Section 5-1.13, "Final Inspection," of the Standard Specifications and shall be completed a minimum of 20 working days before the estimated completion of the contract.

10-2.05 IRRIGATION SYSTEMS

Irrigation systems shall be furnished and installed in conformance with the provisions in Section 20-5, "Irrigation Systems," of the Standard Specifications, except materials containing asbestos fibers shall not be used.

Attention is directed to the provisions in "Obstructions" of these special provisions, regarding work over or adjacent to existing underground facilities. Excavation for proposed irrigation facilities shall not be started until the existing underground facilities have been located.

Method A pressure testing shall conform to the provisions in Section 20-5.03H(1), "Method A", of the Standard Specifications, except leaks that develop in the tested portion of the system shall be located and repaired after each test period when a drop of more than 5 pounds per square inch is indicated by the pressure gage. After the leaks have been repaired, the one hour pressure test shall be repeated and additional repairs made until the drop in pressure is 5 pounds per square inch or less.

Pipe supply lines shall be pressure tested in conformance with the provisions in Section 20-5.03H, "Pressure Testing," of the Standard Specifications, except the pipe (supply line) on the discharge side of the control valve shall be tested by Method B as specified in Section 20-5.03H(2), "Method B," of the Standard Specifications.

VALVE BOXES

Valve boxes shall conform to the provisions in Section 20-2.24, "Valve Boxes," of the Standard Specifications, except as otherwise provided herein.

Covers for plastic valve boxes shall be glass fiber reinforced plastic and green or brown in color to match landscaping. Valve boxes shall be identified on the top surface of the covers by branding the appropriate abbreviations for the irrigation facilities contained in the valve boxes as

shown on the plans. Valve boxes that contain remote control valves shall be identified by the appropriate letters and numbers (controller and station numbers). The letters and numbers shall be 2 inches in height.

BALL VALVES

Ball valves shall be furnished and installed as shown on the plans and in conformance with these special provisions.

Ball valves shall have a two-piece brass or bronze body, full port opening, and shall conform to the following:

Specification	Minimum Requirement
Non-shock cold water working pressure	400 psi
Seats	TFE (Teflon)
O-Ring Seals	TFE (Teflon)

Ball valves shall be of the same size as the pipeline which the valves serve, unless otherwise noted on the plans.

Ball valves shall be installed in a separate valve box, unless otherwise indicated on the plans..

GATE VALVES

Gate valves shall be as shown on the plans and in conformance with the provisions in Section 20-2.28, "Gate Valves," of the Standard Specifications and these special provisions.

Gate valves, 3 inches and larger in size, shall be furnished with a square nut and 3 long shank keys that will operate the valve.

Gate valves, 3 inches and larger in size, shall be flanged type gate valves. Pipe flanges used to connect plastic or metal pipe to gate valves shall be plastic or metal.

Gate valves shall have a solid bronze or brass wedge.

ELECTRIC AUTOMATIC IRRIGATION COMPONENTS

Irrigation Controllers

Irrigation controllers shall be single, solid-state independent controllers conforming to the following:

A. Irrigation controllers shall be fully automatic and shall operate a complete 14-day or longer irrigation program.
B. A switch or switches shall be provided on the face of the control panel that will turn the irrigation controller "on" or "off" and provide for automatic or manual operation. Manual operation shall allow cycle start at the desired station and shall allow activation of a single station.
C. The watering time of each station shall be displayed on the face of the control panel.
D. The irrigation controller and the low voltage output source shall be protected by fuses or circuit breakers.
E. The irrigation controller mechanism, panel and circuit board shall be connected to the low voltage control and neutral conductors by means of plug and receptacle connectors located in the irrigation controller enclosure.

F. Each station shall have a variable or incremental timing adjustment with a range of 60 minutes to a minimum of one minute.
G. Irrigation controllers shall be capable of a minimum of 2 program schedules.
H. Irrigation controllers shall have an output that can energize a pump start circuit or a remote control valve (master).
I. Irrigation controllers shall be manufactured by the same company.
J. Where direct burial conductors are to be connected to the terminals strip, the conductors shall be connected with the proper size open-end crimp-on wire terminals. No exposed wire shall extend beyond the crimp of the terminal and the wires shall be parallel on the terminal strip.

Attention is directed to the provisions in "Electric Service (Irrigation)" of these special provisions regarding electrical power for irrigation controllers and irrigation controller enclosure cabinets.

Electric Remote Control Valves

Electric remote control valves shall conform to the provisions in Section 20-2.23, "Control Valves," of the Standard Specifications and the following:

A. Valves shall be glass filled nylon. .
B. Valves shall be straight pattern (side inlet) as shown on the plans.
C. Electric remote control valves shall be outfitted with adjustable pressure regulators as shown on the plans. Pressure regulators shall be compatible for use with the electric remote control valves and shall be of the same manufacturer as the electric remote control valves. Pressure regulators shall regulate and maintain the outlet pressure regardless of the incoming pressure. Pressure regulators shall withstand a cold water working pressure of 200 psi. The Contractor shall adjust the pressure regulators to provide proper operation of the irrigation system downstream of the electric remote control valves.
D. Flow Sensors shall type and size noted on the plans. Flow sensor shall be installed per manufacturer’s recommended details. Adhere to minimum distance requirements for upstream and downstream distances of any changes in piping such as other devices which may cause hydraulic turbulence. Wiring from sensor to controller shall be encased in Schedule 40 conduit continuously from valve box of flow sensor, through sweep ell conduit through concrete slab. Do not share conduit with remote control wiring. Control wiring shall be direct burial.

Pull Boxes

Pull box installations shall conform to the provisions in Section 20-5.027I, "Conductors, Electrical Conduits and Pull Boxes," of the Standard Specifications.

Conductors

Low voltage, as used in this section "Conductors," shall mean 36 V or less.

Low voltage control and neutral conductors in pull boxes and valve boxes, at irrigation controller terminals, and at splices shall be marked with adhesive cloth wrap-around markers.

Low voltage control and neutral conductors in pull boxes and valve boxes, at irrigation controller terminals, and at splices shall be marked as follows:

A. Conductor terminations and splices shall be marked with adhesive backed paper markers or adhesive cloth wrap-around markers, with clear, heat-shrinkable sleeves sealed over the markers.
B. Non-spliced conductors in pull boxes and valve boxes shall be marked with clip-on, "C" shaped, white extruded polyvinyl chloride sleeves. Marker sleeves shall have black, indented legends of uniform depth with transparent overlays over the legends and "chevron" cuts for alignment of 2 or more sleeves.

Markers for the control conductors shall be identified with the appropriate number or letter designations of irrigation controllers and station numbers. Markers for neutral conductors shall be identified with the appropriate number or letter designations of the irrigation controllers.

The color of low voltage neutral and control conductor insulation, except for the striped portions, shall be homogeneous throughout the entire thickness of the insulation.

Insulation for conductors may be UL listed polyethylene conforming to UL44 test standards with a minimum insulation thickness of 41 mils for wire sizes 10AWG and smaller.

Relief from maintenance and responsibility for electric automatic irrigation components will be granted in conformance with "Relief from Maintenance and Responsibility" of these special provisions. Before the Engineer grants relief from maintenance and responsibility, the functional test specified in Section 20-5.027J, "Testing," of the Standard Specifications shall be satisfactorily completed, and the manufacturer's written instructions shall be provided to the Engineer on the use and adjustment of the installed irrigation controllers.

REMOTE IRRIGATION CONTROL SYSTEM

The Remote Irrigation Control System (RICS) shall consist of a base station, field units and personnel training.

The equipment and software, made by the same manufacturer and bearing the same model number, proposed for this project shall have been in use as a complete unit for a minimum of 6 months by a private sector company or a government agency located in the State of California. The Engineer shall be furnished with the location and owner (name, address and phone number) of the RICS including approval by its owner for the Engineer to view, inspect, and discuss the system and its components.

The Contractor shall make application and arrangements for commercial leases or licenses required by the Federal Communications Commission (FCC) and shall make arrangements for commercial leases required for radio data transmission.

The Contractor shall make application and arrangements for trunked-telemetry, telephone or cellular service and assign the services to the County upon the date of acceptance of the contract.

Fees for the applications, licenses and leases will be reimbursed by the County.

Inputs and outputs of the communication system shall be lightning, transient and surge protected, including the power, antenna and control connections.

Field Units

The field units shall consist of an irrigation controller, communication equipment and a central control interface installed in an irrigation controller enclosure cabinet. The irrigation

controller enclosure cabinet shall conform to the provisions in "Irrigation Controller Enclosure Cabinet" of these special provisions.

Field units shall monitor the main line flows when operating with, or independently of, the base station.

Field units grouped together shall share a common communication unit with the base station.

Irrigation controllers and central control interfaces shall provide the following features:

A. An output that can energize a remote control valve (master) and flow sensor circuit in addition to the normal stations.
B. Interfaces and a terminal strip labeled for each sensor:

    1. Flow sensor
    2. Master Valve

C. Monitor the sensors.
D. Operate by receiving programs downloaded from the base station and retain as resident programs.
E. Provide manual operation. Manual operation shall allow cycle start at the desired station and shall allow activation of a single station.
F. The station number and watering time of the station currently operating shall be displayed on the face of the control panel.
G. Be programmable to monitor flow rate to allow selection of:

    1. Percent-high flow
    2. Percent-low flow
    3. Provisions for supply line fill time
    4. Leak detection in excess of 1 gallon per minute.

H. Closing of remote control valve (master), shutting off pumps and remote control valves when flow rates are exceeded on main lines or through remote control valve (as determined by operator-entered parameters). When an excess high flow is determined by the field unit, the irrigation program shall conduct a series of test steps to determine one of the following and take the corresponding action:

    1. For a mainline break or stuck open remote control valve: The entire irrigation system shall be shut down.
    2. For a lateral line break or missing sprinklers: The current operating remote control valve shall be shut down and the irrigation program shall go on to the next scheduled remote control valve.

I. A time delay feature shall prevent an instantaneous response to a temporary surge at start-up or momentary system condition.
J. The following field unit activities (alarms) shall be logged at the field unit and uploaded to the base station upon request of the base station in real-time and scheduled unattended time:

1. A low flow alarm when the actual flow is less than the percent-low and the supply line fill time has passed.
2. A high flow alarm when the actual flow is greater than the percent-high and the supply line fill time has passed.
3. There is no actual flow detected and the supply line fill time has passed.

K. The field unit and the low voltage output source shall be protected by fuses or circuit breakers.
L. The field unit mechanism, panel and circuit board shall be connected to the low voltage control and neutral conductors by means of plug and receptacle connectors located in the irrigation controller enclosure.
M. Where direct burial conductors are to be connected to the terminal strips, the conductors shall be connected with the proper size open-end crimp-on wire terminals. No exposed wire shall extend beyond the crimp of the terminal and the wires shall be parallel on the terminal strip.
N. Shall have a nonvolatile memory or a rechargeable battery for program protection.
O. A lithium battery or a rechargeable battery back-up to keep the clock running and prevent loss of data in the event of a power failure.
P. A current operation manual.

Project: Auburn Folsom Rd. Widening
South Phase
County of Placer
32 St. IRRInet

Model #: IT-32-RT-S24P-AHT-X

Includes:
32 Station Motorola UHF CM200 irrigation controller assemby with
1.96 turf firmware and 2nd CM200 UHF radio for Scorpio communications.
Unit comes mounted in a Strongbox SB-24SS Stainless Steel Enclosure with Pedestal.
Assembly includes GFI outlet/power switch and terminals, #2 - 450 MHz Millenium
Lo-Profile antenna kits, and a Northern Technologies 110 volt surge protector.
Also includes assembly, hot test (in shop), and all radio programming.
NOTE - Inlcudes a Portable Keyboard for Programming

Purchase Does Not Include Taxes $9,400.00

~ Add As Needed ~

1 ARAD Hydrometer w/Potted 24 VAC Solenoid, Manual On/Off/Auto Valve, Copper Tubing & Body Drain Plug

~~ See Attached for Sizes and Pricing ~~

~ NOTE ~ This is a speculation cost only and does not constitute a guaranteed price quote from Central Control Systems, Ltd.

Contact Central Control Systems, Ltd. for Details & Equipment (530) 662-6841

~~ NOTE ~~ All Installations Must Include a Grounding Rod

All equipment is to be factory manufactured new upon order.

Communication Equipment

The communication equipment for the field units shall have a 2-way data communication link with the base station by one or a combination of the methods described under base station communications in this special provision.

Inputs and outputs of the communication system shall be lightning, transient and surge protected, including power, antenna and control connections.

TRAINING

Personnel training shall consist of a minimum 60 hours of classroom and field training for 4 personnel on the use and adjustment of the base station equipment (including software) and field units. The training shall be conducted over 8 consecutive working days, unless otherwise permitted by the Engineer. One complete set of training documentation and training aids shall be provided to each trainee and 2 sets to the Engineer (if videos are included in the training sessions, only one video tape copy will be required) and the training material shall become the property of the County.

The County will provide space for the training, including chairs and tables. Other required training aids will be the responsibility of the Contractor. At the option of the Contractor, the training facility may be provided at a facility of the Contractor's choice, that is, within 30 miles of the project location or of the Office of the District Director of the District in which the project is located.

MEASUREMENT AND PAYMENT

Quantities of base stations will be measured by the unit as determined from actual count in place.

The contract unit price paid for field unit shall include full compensation for furnishing all labor, materials, tools, equipment, and incidentals, and for doing all the work involved in installing field units, including training, complete in place, as shown on the plans, as specified in the Standard Specifications and these special provisions, and as directed by the Engineer.

REMOTE CONTROL VALVE ACTUATOR SYSTEM

A remote control valve actuator system shall consist of a portable (hand held) receiver, a transmitter, a field carrying case, an AC power charging unit, and a receiver connector. The remote control valve actuator equipment shall be manufactured by the same manufacturer as the irrigation controller and shall be fully compatible with the irrigation controller. The receiver and transmitter shall comply with Federal Communications Commission (FCC) Rules and Regulations, Part 15, as of the date of manufacture. Remote Control Valve Actuator System shall be as manufactured by Motorola. Provide necessary batteries and provide to Owner at the end of the plant establishment period.

The receiver connector shall be attached directly to the terminal strip of each irrigation controller and continue out to the socket head mounted to the outside of the irrigation controller enclosure cabinet as shown on the plans. The connector shall have an 18-inch jacketed multi-conductor cable with a spade lug terminal and shall have a "D" subminiature connector with gold plated contacts which allows the receiver unit to be plugged directly into the connector. The connector housing shall be weather resistant thermoplastic with a hinged socket head cap with a screw to be used as a locking mechanism. The socket head cap screw shall be operated by means of a key which shall be provided by the manufacturer.

The receiver shall be plugged into the receiver connector and shall operate the stations of the irrigation controller on radio signals from the transmitter. The receiver shall receive radio signals at a minimum distance of one mile. Receiver circuitry shall be protected from overload by a field replaceable fuse. The receiver shall operate on 24 V(ac).

The transmitter shall provide a 2-way FM, radio signal for a minimum range of one mile to the receiver located at the irrigation controller enclosure cabinet. The transmitter shall have a digital key pad and instant actuation of the stations, master valves or pumps in random, numerical or reverse numerical sequences by pressing a single key for each function. The transmitter shall allow for remote data retrieval, manual control and programming. The transmitter shall operate a master valve or pump independently of the controller stations. The transmitter shall transmit a radio frequency of 27.250 MHz.

The power source for the portable units shall consist of an internal charged battery pack which shall be recharged by the charging unit. The charging unit shall have an input of 110 V(ac) and an output of 24 V(ac) at 1.5 A.

The field carrying case shall allow complete and convenient operation of the unit while in the case.

Before the irrigation system functional test begins, 2 complete remote control valve actuator systems, except for receiver connectors, shall be delivered to the Engineer.

Full compensation for the remote control valve actuator system shall be considered as included in the contract price paid for the various irrigation controllers involved and no additional compensation will be allowed therefor.

IRRIGATION CONTROLLER ENCLOSURE CABINET

Irrigation controller enclosure cabinets shall be constructed and equipment installed in the cabinets in conformance with the details shown on the plans, the provisions of Section 86-3.04A, "Cabinet Construction," of the Standard Specifications, and these special provisions.

Electric service shall be installed in accordance with "Electric Service (Irrigation)" of these special provisions.

Irrigation controller enclosure cabinets shall be provided with cross ventilation, roof ventilation or a combination of both. The ventilation shall not compromise the weather resistance properties of the irrigation controller enclosure cabinets and shall be fabricated by the manufacturer.

The anchorage arrangement shall be inside the cabinet as shown on the plans. Dimensions of the cabinet shall be suitable for the equipment to be installed as shown on the plans and specified in these special provisions.

Irrigation controller enclosure cabinet dimensions for a single irrigation controller shall be included in the cost of irrigation controller and come pre-assembled from the manufacturer.

Irrigation controller enclosure cabinets shall be fabricated in conformance with the provisions in Section 86-3.04A, "Cabinet Construction," of the Standard Specifications.

Irrigation controller enclosure cabinets shall be fabricated of stainless steel.

Irrigation controller enclosure cabinet doors shall not be furnished with integral door locks (padlocks). Irrigation controller enclosure cabinet door handles shall have provisions for padlocking in the latched position. Padlocks will be Contractor-furnished and keys turned over to the Owner at the end of the plant establishment period. Contractor shall coordinate with the Owner for keying system.

Mounting panels shall be fabricated of metal sheets with a minimum thickness of 10-gage for cold rolled steel or 3/16 inch for aluminum.

Inside of the doors shall have provisions for storage of the irrigation plans.

Equipment, except for field wiring, shall be installed in the cabinet in a shop by the equipment manufacturer's representative or distributor prior to field installation.

IRRIGATION SYSTEMS FUNCTIONAL TEST

Functional tests for the remote irrigation controller system (RICS) and associated automatic irrigation systems shall conform to the provisions in Section 20-5.027J, "Testing," of the Standard Specifications and these special provisions.

Two functional tests shall be performed, one without and one with connection to the remote irrigation controller system base station. Both tests shall consist of demonstrating to the Engineer, through one complete cycle of the irrigation controllers in the automatic mode, that the associated automatic components of the irrigation systems operate properly.

The Contractor shall notify the Engineer not less than 2 weeks prior to starting the functional tests for the remote irrigation control system.

The existing remote irrigation controller system base station is located at _____.

Associated automatic components for both tests shall include, but not limited to, new remote control valve actuator systems, irrigation controllers, remote control valves, and flow sensors. Associated automatic components for the second test shall include, but not be limited to, existing irrigation software programs, cellular phone, existing trunked radio transmission systems, and flow alarms for high, low, zero, and maximum mainline flows.

The first test shall be performed prior to planting the plants and shall consist of testing the irrigation controllers and associated automatic irrigation systems without connection to the remote irrigation controller system base station. Upon completion of a satisfactory functional test, and correction of the deficiencies, the plants to be planted in the areas watered by the irrigation system may be planted, provided the planting areas have been prepared as specified in these special provisions.

The second test shall be performed prior to the start of plant establishment and shall consist of testing the irrigation controllers (field units) and associated automatic irrigation systems with connection to the remote irrigation controller system base station. As part of the second test, a remote irrigation controller system watering schedule shall be submitted for each irrigation controller (field unit) to the Engineer. The Engineer will enter the watering schedule into the irrigation software program, and a computer printout will be made available to the Contractor for verification. If the Engineer determines the submitted watering schedule is unacceptable, a revised watering schedule shall be submitted to the Engineer for approval within 5 working days. Also as part of the second test, the Contractor shall demonstrate to the Engineer that the remote irrigation controller system base station detects and reports the high, low, zero, and maximum mainline flow alarms. Upon completion of a satisfactory test, including correction of deficiencies, the plant establishment period may begin, provided planting work as specified in these special provisions has been completed except for plant establishment work.

PIPE

Steel, Brass, or Copper Pipe

Brass supply lines installed between water meters and backflow preventer assemblies shall be installed not less than 18 inches below finished grade, measured to the top of the pipe. Connections shall be made per County standard drawings.

Plastic Pipe

Plastic pipe supply lines shall be polyvinyl chloride (PVC) 1120 or 1220 pressure rated pipe with the minimum pressure rating (PR) shown on the plans.

Plastic pipe supply lines and fittings that are 4 inches or larger in diameter on the supply side of control valves shall be the rubber ring gasket type, except when pressure rating (PR) 315 plastic pipe supply line is required.

Plastic pipe supply lines less than 4 inches in diameter shall have solvent cemented type joints. Primers shall be used on the solvent cemented type joints.

Plastic pipe supply lines (main) shall have a minimum cover of 1.5 feet.

Plastic pipe (irrigation lines) shall be installed not less than 12 inches below the finished grade, measured to the top of the pipe.

A nonhardening joint compound shall be used in place of the pipe thread sealant tape conforming to the provisions in Section 20-5.03E, "Pipe," of the Standard Specifications. Joint compounds shall be applied in conformance with the manufacturer's recommendations.

Fittings for plastic pipe supply lines with a pressure rating (PR) of 315 shall be Schedule 80.

DRIP IRRIGATION

Dripperline and Integral Dripperline Components: The dripperline shall be Techline CV or Techline pressure compensating dripperline or 5/8" Techlite non-pressure compensated dripperline as manufactured by Netafim Irrigation, Inc. Dripper flow rate and spacing shall be as indicated on drawings.

Techline CV/Techline/5/8" Fittings: All Techline CV/Techline Techlite connections shall be made with approved Techline CV/Techline Techlite insert fittings.

Soil Staples (TLS6): All on-surface/under mulch Techline CV/Techline Techlite installations shall be held in place with Techline Soil Staples spaced evenly every 3' to 5' on center, and with two staples on each change of location.

Line Flushing Valves: All Techline/Techlite systems shall be installed with Netafim Automatic Line Flushing Valves as indicated on drawings. Techline CV zones do not require an automatic line flushing valve but must have a manual flushing port(s) in the position that an automatic flush valve would be positioned.

Air/Vacuum Relief Valves: Each independent Techline subsurface irrigation zone shall be installed with an Air/Vacuum Relief Valve at the zone's highest point(s). Techline CV zones do not require an Air/Vacuum Relief Valve.

Pressure Regulator: A pressure regulator shall be installed at each zone valve or on the main line to ensure operating pressures do not exceed system requirements. The pressure regulator shall be a Netafim Pressure Regulator. Model number as indicated on drawings.

Disc Filter: A disc filter shall be installed at each zone valve or on the main line to ensure proper filtration. The filter shall be a Netafim Disc Filter. Model number and mesh as indicated on drawings.

Execution

There shall be a 4" - 6" cover over dripperline.

Install all dripperline as indicated on drawings. Use only Teflon tape on all threaded connections.

Clamp Techline/Techlite fittings with Oetiker clamps when operating pressure exceeds specific dripperline fitting requirements.

When installing Techline CV/Techline/Techlite dripperline on-surface, install soil staples as listed below:

Sandy Soil - One staple every three (3') feet and two (2) staples on each change of direction (tee, elbow, or cross).

Loam Soil - One staple every four (4') feet and two (2) staples on each change of direction (tee, elbow, or cross).

Clay Soil - One staple every five (5') feet and two (2) staples on each change of direction (tee, elbow, or cross).

Cap or plug all openings as soonmaterials that would obstruct the pipe. Leave in place until removal is necessary for completion of installation.

WATER METER

Water meters for the irrigation systems will be furnished and installed by the serving utility at the locations shown on the plans.

The Contractor shall make the arrangements and pay the costs and fees required by the serving utility.

The San Juan Water District has established a fee of $_____ for furnishing and installing a water meter. If, at the time of installation, this fee has been changed, the State will take a credit for the reduction in the fee, or the State will pay the difference for the increase in the fee. The credit or payment will be taken or paid on the first monthly progress payment made after the meter is installed. The Contractor shall furnish the Engineer with a copy of the invoice for the installation fee.

Attention is directed to Section 20-4.06, "Watering," of the Standard Specifications. The Contractor shall make the arrangements for furnishing and applying water until the water meters have been installed by the serving utility.

The quantity of water meters will be measured by the unit as determined from actual count in place.

The contract unit price paid for water meter shall include full compensation for furnishing all labor, materials, tools, equipment, and incidentals, and for doing all the work involved in furnishing and installing water meters, complete in place, as shown on the plans, as specified in the Standard Specifications and these special provisions, and as directed by the Engineer.

BACKFLOW PREVENTER ASSEMBLIES

Backflow preventers shall conform to the provisions in Section 20-2.25, "Backflow Preventers," of the Standard Specifications, County Standard Drawings, and these special provisions.

Backflow preventers shall have current approval from the University of Southern California Foundation for Cross-Connection Control and Hydraulic Research (USC Foundation).

Before backflow preventer assembly installation, the Contractor shall provide the Engineer with the portion of the USC Foundation "List of Approved Backflow Prevention Assemblies" showing type of assembly, manufacturer's name, model number, edition of the manual under which the assembly was approved, approval date and the last renewal date.

The "List of Approved Backflow Prevention Assemblies" is available to Foundation Members. Membership information to join the USC Foundation is available at:

http://www.usc.edu/dept/fccchr/membership.html

Questions concerning the USC Foundation "List of Approved Backflow Prevention Assemblies" can be answered by calling the Foundation at toll free (866) 545-6340.

Pressure loss through the backflow preventers shall not exceed the following:

BACKFLOW PREVENTER SIZE (inches)	FLOW RATE (Gallons per minute)	PRESSURE LOSS (psi)
1”	10	12

Backflow preventer assemblies shall be painted with a minimum of 2 applications of a commercial quality enamel paint. The color of the paint shall be light brown.

BACKFLOW PREVENTER ASSEMBLY ENCLOSURE

Enclosures shall be fabricated of structural steel angles and flattened expanded metal and shall be installed over backflow preventer assemblies on a portland cement concrete pad as shown on the plans and in conformance with these special provisions. Backflow Preventer Assembly Enclosures shall be an insulated metal enclosure, Model #PW/E1AW as manufactured by Placer Water Works (916) 773-2959.

Concrete for the concrete pad shall conform to Section 90-10, "Minor Concrete," of the Standard Specifications.

Hold down bolt assemblies shall be galvanized and shall be installed when the portland cement concrete pad is still plastic. Nuts shall be hexagonal and washers shall be the lock type.

Enclosures shall be painted with one application of a commercial quality pre-treatment, vinyl wash primer and a minimum of one application of a commercial quality, exterior enamel for metal. The finish color shall be light brown.

All parts of the backflow preventer assembly enclosure, including hold down assemblies, may be constructed of standard steel materials specified above. The minimum clearance between the backflow preventer assembly and the backflow preventer assembly enclosure shall be 2 inches.

Full compensation for furnishing and installing backflow preventer assembly enclosures and constructing the portland cement concrete pads for the enclosures shall be considered as included in the contract unit price paid for the size of backflow preventer assembly involved and no separate payment will be made therefor.

TESTING NEW BACKFLOW PREVENTERS

New backflow preventers shall be tested for proper operation in conformance with the provisions in Section 20-5.03J, "Check and Test Backflow Preventers," of the Standard Specifications and these special provisions.

Tests for new backflow preventers shall be satisfactorily completed after installation and before operation of the irrigation systems.

New backflow preventers shall be retested one year after the satisfactory completion of the previous test until the plant establishment period is completed.

SPRINKLERS

Sprinklers shall conform to the type, pattern, material, and operating characteristics listed in the "Sprinkler Schedule" shown on the plans.

WYE STRAINERS

Wye strainers shall be installed as shown on the plans.

FINAL IRRIGATION SYSTEM CHECK

A final check of existing and new irrigation facilities shall be performed not more than 20 working days prior to acceptance of the contract.

The length of watering cycles using potable water measured by water meters for the final check of irrigation facilities will be determined by the Engineer.

Remote control valves connected to existing and new irrigation controllers shall be checked for automatic performance when the controllers are in automatic mode.

Unsatisfactory performance of irrigation facilities installed or modified by the Contractor shall be repaired and rechecked at the Contractor's expense until satisfactory performance is obtained, as determined by the Engineer.

Repair or replacement of existing irrigation facilities due to unsatisfactory performance shall conform to the provisions in "Existing Highway Irrigation Facilities" of these special provisions.

Nothing in this section "Final Irrigation System Check" shall relieve the Contractor of full responsibility for making good or repairing defective work or materials found before the formal written acceptance of the entire contract by the Director.

Full compensation for checking the irrigation systems prior to the acceptance of the contract shall be considered as included in the contract lump sum price paid for plant establishment work and no additional compensation will be allowed therefor.

10-2.06 ROOT BARRIERS

Root barrier work shall consist of providing and installing root barriers for Plant (Group U) as shown on the plans in the medians and as specified in these special provisions.

MATERIALS

Root barriers shall be an injection molded or extruded modular component made of high density polypropylene or polyethylene plastic.

Panels shall measure 24" in width by 24 inches in depth with a mean thickness of 0.08". Plastic shall be recyclable and contain ultra-violet inhibitors.

Each panel shall have:

Not less than four raised ribs protruding 1/2" from the face of the panel and running from top to bottom thereof. Each rib or root guide will have an anit-compaction cap at its tip, perpendicular to the rib, parallel to the face of the barrier and running the length of the rib thereby forming root nurturing channels. The distance between the guides shall not exceed 6".

Each panel shall have an integral male/female sliding lock, the male down the length of one side and the female down the length of the other.

The basic properties of the material shall be:

Materials and Thicknesses		Homopolymer Polyethelene 0.08 inch Extruded
Properties	ASTM Test Method	Value Homopolymer Polyethelene
Tensile Stress @ Yield	D638	3800
Elongation at Break %	D638	10%
Tensile Modulus	D638	155,000
Notched Izod Impact	D256A	0.4 - 4.0
Flexual Modulus 73 PSI	D790	145,000
Hardness Shore	D2240	P66

APPLICATION

Root barriers shall be installed between proposed trees and concrete sidewalk or curbas shown on the plans. Panels shall be installed flush with the finished grade and joined with integral male/female sliding locks. Locking mechanism shall have a close tolerance to restrict slippage between panels. Barriers shall be installed with root deflectors facing inward.

MEASUREMENT AND PAYMENT

Full compensation for root barriers shall be considered as included in the contract lump sum price paid for highway plantingand no additional compensation will be allowed therefor.

10-2.07 GRAVEL MULCH

Gravel mulch work shall consist of furnishing and placing gravel mulch, including site preparation, edging, and weed control fabric as shown on the plans and in conformance with the Standard Specifications, these special provisions, as shown on the plans and as directed by the Engineer.

MATERIALS

Gravel

Gravel shall consist of crushed rock and shall conform to the following requirements:

Grading Requirements

Sieve Size	Percent Passing
50-mm	100
37.5-mm	90-100
25-mm	-
19-mm	50-85
4.75-mm	25-45
600-µm	10-25
75-µm	2-9

Gravel shall consist of crushed rock and shall conform to the following requirements:

Grading Requirements

Sieve Size	Percent Passing
25-mm	100
19-mm	90-100
4.75-mm	35-60
600-µm	10-30
75-µm	2-9

The color of gravel shall be _____.

The Contractor shall submit a 2 kg sample of gravel to the Engineer for approval prior to delivery of materials to the site.

Weed Control Fabric

Weed control fabric shall be manufactured from thermally spun bonded polypropylene fabric and shall conform to the following:

Specification	Minimum Requirement
Grab Tensile Strength	59 kg
Grab Elongation	60%
UV Resistance	70% @ 150 hours
Mass	102 grams/square meter

Staples shall be 2" wide, 8" in length, and 11 gauge wire.

A copy of the manufacturers product sheet together with instructions for installation shall be furnished to the Engineer 5 days before installation.

A Certificate of Compliance for the weed control mat shall be furnished to the Engineer in conformance with the provisions in Section 6-1.07, "Certificates of Compliance," of the Standard Specifications.

Edging

Edging shall be 100% recycled polyethylene plastic, including 100% recycled polyethylene plastic stakes,. and shall shall be constructed as shown on the plans.

Edging shall be a 1 1/2 in by 3 1/2 in and 20 ft in length. Stakes shall be 12 in length. Stakes shall be pointed and shall be placed as shown on the plans. Each stake shall be driven flush with the top edge of the edging and then the top beveled away from the edging on a 45 degree angle. Stakes shall be attached to the edging with a minimum of two l2d hot-dip galvanized ring shank nails per stake.

Stake spacing shall be per edging manufacturer's specifications for use and site conditions. A copy of the manufacturer’s product sheets together with instructions for installation shall be furnished to the Engineer 5 days before application.

Soil Treatment

Dichlobenil shall conform to the provisions in Section 20-4.026, "Pesticides," of the Standard Specification, except recommendations from a Pest Control Adviser will not be required.

SITE PREPARATION

Prior to gravel mulch installation, the areas shall be cleared as specified under "Roadside Clearing" in these special provisions.

Earthwork

Earthwork shall conform to the provisions in Section 19, "Earthwork," of the Standard Specifications and these special provisions.

After clearing, the areas to receive gravel mulch shall be excavated to the depth shown on the plans, graded to a smooth surface, compacted to not less than 90% relative compaction.

After clearing, areas to receive gravel mulch shall be excavated to a sufficient depth such that the finished elevation of the gravel mulch will meet the proposed finish grade.

Surplus excavated material shall become the property of the Contractor and shall be disposed of outside the highway right of way in conformance with the provisions in Section 7-1.13, "Disposal of Material Outside the Highway Right of Way," of the Standard Specifications.

Soil Treatment

Following excavation and compaction, the subbase for gravel mulch shall be treated with Dichlobenil.

Immediately prior to treatment, the subbase shall be scarified to a minimum depth of 3" and rocks, large lumps of earth, weeds, and other debris shall be removed and disposed of. Removed material shall be disposed of outside the highway right of way in conformance with the provisions in Section 7-1.13, "Disposal of Material Outside the Highway Right of Way," of the Standard Specifications. The loosened material shall then be brought to as finely divided condition as the material will permit.

After scarification, the soil shall be sterilized with Dichlobenil. applied at the maximum label rate unless otherwise directed by the Engineer:

Pesticides shall be mixed in conformance with the manufacturer's recommendations and shall be applied by a device approved by the Engineer. Pesticides shall not be applied more than 8 hours prior to placing asphalt concrete surfacing. Pesticides shall not be applied more than 12" beyond the areas to be surfaced.

Prior to placement of gravel mulch, the soil surface shall be smooth, firm stable and free of rocks, clods, foliage, roots or other material greater than 1" in diameter.

PLACEMENT

Weed control fabric shall be placed in areas to receive gravel mulch. Weed control fabric shall be placed loosely with longitudinal and transverse joints overlapped 8". Following placement, the fabric shall lie flat, smooth and be in uniform contact with the soil surface, without bulges or wrinkles. Fabric shall be stabled or staked in place to keep fabric in place during gravel placement and compaction.

Edging shall be installed to delineate the limits of the gravel mulch areas as shown on the plans. Edging will not be required between gravel mulch areas and the adjacent face of pavement edges.

Gravel mulch shall be placed as a single 4" layer.

Gravel mulch shall be placed in two 4" layers.

Each layer of gravel mulch shall be raked to evenly blend various material, sizes forming a smooth uniform surface. Each layer of gravel mulch shall be brought to a relative compaction of not less than 90 percent by compaction equipment such as a double drum roller, single drum

roller, or vibratory tamp. After placement of gravel mulch, compaction shall not begin less than 6 hours after placement, nor later than 48 hours.

When placement is complete the surface shall be uniform, maintain original flow lines, slope gradient and contours of the project site.

MEASUREMENT

Gravel mulch will be measured by the cubic yard, as determined from actual measurements made parallel to the ground slope.

PAYMENT

The contract price paid per cubic yard for gravel mulch shall include full compensation for furnishing all labor, materials, tools, equipment, and incidentals, and for doing all the work involved in providing and placing gravel mulch, complete in place, as shown on the plans, as specified in the Standard Specifications and these special provisions, and as directed by the Engineer.

SECTION 10-3. SIGNALS, LIGHTING AND ELECTRICAL SYSTEMS

10-3.01 DESCRIPTION

Traffic signal and lighting shall conform to the provisions in Section 86, "Signals, Lighting and Electrical Systems," of the Standard Specifications and these special provisions.

10-3.02 COST BREAK-DOWN

Cost break-downs shall conform to the provisions in Section 86-1.03, "Cost Break-Down," of the Standard Specifications and these special provisions.

The Engineer shall be furnished a cost break-down for each contract lump sum item of work described in this Section 10-3.

The cost break-down shall be submitted to the Engineer for approval within 15 days after the contract has been approved. The cost break-down shall be approved, in writing, by the Engineer before any partial payment for the items of electrical work will be made.

The cost break-down shall include the following items in addition to those listed in the Standard Specifications:

A. Model 170E Controller Assembly
B. Model 332 Controller Cabinet
C. Battery Backup System
D. Batteries for BBS

10-3.03 EQUIPMENT LIST AND DRAWINGS

The controller cabinet schematic wiring diagram and intersection sketch shall be combined into one drawing, so that, when the cabinet door is fully open, the drawing is oriented with the intersection.

A maintenance manual shall be furnished for all controller units, auxiliary equipment, and vehicle detector sensor units, control units, and amplifiers. The maintenance manual and operation manual may be combined into one manual. The maintenance manual or combined maintenance and operation manual shall be submitted at the time the controllers are delivered for testing or, if ordered by the Engineer, prior to purchase. Two sets shall be provided. The maintenance manual shall include, but need not be limited to, the following items:

A. Specifications
B. Design characteristics
C. General operation theory
D. Function of all controls
E. Trouble shooting procedure (diagnostic routine)
F. Block circuit diagram
G. Geographical layout of components
H. Schematic diagrams
I. List of replaceable component parts with stock numbers

10-3.04 MAINTAINING EXISTING AND TEMPORARY ELECTRICAL SYSTEMS

Traffic signal system shutdowns shall be limited to periods between the hours of 9:00 a.m. and 3:00 p.m.

Traffic signal system shutdowns shall be limited to periods allowed for lane closures listed or specified in "Maintaining Traffic" of these special provisions.

10-3.05 FOUNDATIONS

Reinforced cast-in-drilled-hole concrete pile foundations for traffic signal and lighting standards shall conform to the provisions in "Piling" of these special provisions.

Signal pole anchor bolts shall be aligned to ensure a maximum mast arm offset of two (2) degrees from perpendicular to the roadway.

The Contractor shall construct a minimum 6-inch high curb around the signal controller/service pad, excluding the sidewalk/roadway side of the pad. The minimum curb height shall increase as necessary to ensure no steeper than a 2:1 slope of the native material around the pad. Refer to the plans for additional details.

10-3.06 STANDARDS, STEEL PEDESTALS, AND POSTS

Standards, steel pedestals, and posts for traffic signal and lighting standards shall conform to the provisions in Section 86-2.04, "Standards, Steel Pedestals and Posts," of the Standard Specifications, "Steel Structures" of these special provisions, and the following requirements.

Steel bolts not designated on the plans as high-strength (HS) or stainless steel shall be for general applications and shall conform to the requirements in ASTM Designation: A 307.

Where the plans refer to the side tenon detail at the end of the signal mast arm, the applicable tip tenon detail may be substituted.

The sign mounting hardware and sign panels shall be installed at the locations shown on the plans.

Handhole reinforcement rings for standards, steel pedestals, and posts shall be continuous around the handholes.

Type 1 standards shall be assembled and set with the handhole on the downstream side of the pole in relation to traffic or as shown on the plans.

All ferrous metal parts of tubular sign structures shall be galvanized and shall not be painted.

10-3.07 CONDUIT

Attention is directed to the requirements specified in Section 86-2.05, “Conduit,” of the Standard Specification and these special provisions. Conduit to be installed underground shall be Type 1 or Type 3 unless otherwise specified. Detector termination conduits shall be Type 3 .

The conduit in a foundation and between a foundation and the nearest pull box shall be the same type.

When a standard coupling cannot be used for joining Type 1 conduit, a UL listed threaded union coupling conforming to the provisions in Section 86-2.05C, "Installation," of the Standard Specifications, or a concrete-tight split coupling, or concrete-tight set screw coupling shall be used.

When Type 3 conduit is placed in a trench (not in pavement or under portland cement concrete sidewalk), after the bedding material is placed and the conduit is installed, the trench shall be backfilled to not less than 4 inches above the conduit with minor concrete conforming to the provisions in Section 90-10, "Minor Concrete," of the Standard Specificaions, except the

concrete shall contain not less than 421 pounds of cementitious material per cubic yard. The remaining trench shall be backfilled to finished grade with backfill material.

Conduit runs shown on the plans to be located behind curbs may be installed in the street, within 3 feet of, and parallel with the face of the curb, by the "Trenching in Pavement Method" in conformance with the provisions in Section 86-2.05C, "Installation," of the Standard Specifications. Pull boxes shall be located behind the curb or at the locations shown on the plans. Conduit termination in the pull box shall be a minimum of 2" from the sides of the pull box, and as close to the center of the pull box as possible above the crushed rock, and at least 8" below the bottom of the pull box cover. Conduits shall enter and exit pull box quadrants relative to the direction of the run.

After conductors have been installed, the ends of conduits terminating in pull boxes, service equipment enclosures, and controller cabinets shall be sealed with an approved type of sealing compound.

At those locations where conduit is required to be installed under pavement and existing underground facilities require special precautions in conformance with the provisions in "Obstructions" of these special provisions, conduit shall be placed by the "Trenching in Pavement Method" in conformance with the provisions in Section 86-2.05C, "Installation," of the Standard Specifications.

At other locations where conduit is required to be installed under pavement and if a delay to vehicles will not exceed 10 minutes, conduit may be installed by the "Trenching in Pavement Method."

Section 86.2.05C, "Conduit - Installation," of the Standard Specifications paragraph 13, is amended to read:

Conduit shall be laid to a depth of not less than 18 inches below grade in portland cement concrete sidewalk areas and curbed paved median areas, and not less than 30 inches below finished grade or 18 inches below finished subgrade, whichever is greater, in all other areas. Conduit may be laid on top of the existing pavement within new curbed medians being constructed on top of the existing pavement.

Section 86.2.05C, "Conduit - Installation," of the Standard Specifications paragraph 18, subparagraph 3, is amended by adding the following text:

The outline of areas of pavement to be removed shall extend (6 inches) of each side of the trench.

The contractor shall install one #10 THW green locator wire in all conduits to allow for founding conduits location in the future by the Underground Service Alert or by the County

10-3.08 PULL BOXES

Grout in the bottom of pull boxes is not required.

Pull boxes may be the non-PCC type when in unpaved areas, or where the pull box is not adjacent to a standard. Pull boxes installed within areas subject to any traffic, even if incidental, shall be traffic pull boxes.

Pull boxes shall be located behind the curb, dike, shoulder or at the locations shown on the plans. Pull boxes shall not be placed in painted medians, in paved shoulder, inside traveled way or within the boundaries of a wheel chair ramp unless approved by the Engineer.

A pull box marker shall be placed at each pull box in unpaved areas or where the pull box is not adjacent to a standard. Markers shall comply with Type K-2 Marker as shown on Standard Plans Sheet A73A except no reflectorization will be required. A contractor-furnished non-reflective green identification strip shall be applied to each marker.

Full compensation for furnishing and installing pull box markers shall be considered as included in the contract lump sum price paid for traffic signal and lighting and no separate payment will be made therefor.

10-3.09 CONDUCTORS AND WIRING

Splices of conductors shall be insulated with heat-shrink tubing of the appropriate size after thoroughly painting the spliced conductors with electrical insulating coating.

The minimum insulation thickness, at any point, for Type USE, RHH or RHW wire shall be 39 mils for conductor sizes No. 14 to No. 10, inclusive, and 51 mils for No. 8 to No. 2, inclusive. The minimum insulation thickness, at any point, for Type THW and TW wires shall be 27 mils for conductor sizes No. 14 to No. 10, inclusive, 40 mils for No. 8, and 54 mils for No. 6 to No. 2, inclusive.

Additional marking of all conductors and cables shall be made at each termination point or as directed by the Engineer.

Conductors for each vehicle and pedestrian phase shall be bundled together and banded with plastic tie-wrap labels in all pull boxes and at the signal controller cabinet.

Multiple circuit conductors shall not be permitted.

Field conductor wiring shall not be doubled up on any single wire connector. For conductor sizes larger than number 10, connections shall be spliced by the use of compression connectors as shown in the Caltrans Standard Plans.

All field wiring connections shall be soldered after crimping the wire connector.

All crimp connectors shall be sized to accommodate the proper wire gauge.

Grounding conductor splicing shall be sealed with Scotch Kote sealant or an approved equivalent to provide a watertight seal. Two applications are required.

Field fuses shall be installed in the hand hole of the standard.

10-3.10 BONDING AND GROUNDING

Bonding and grounding shall conform to the provisions in Section 86-2.10, "Bonding and Grounding," of the Standard Specifications and these special provisions.

Bonding jumpers in standards with handholes and traffic pull box lid covers shall be attached by a UL listed lug using 3/16-inch diameter or larger brass or bronze bolts and shall run to the conduit or bonding wire in the adjacent pull box. The grounding jumper shall be visible after the standard has been installed and the mortar pad and cap have been placed on the foundation.

Standards without handholes shall have bonding accomplished by jumpers attached to UL listed ground clamps on each anchor bolt.

Equipment bonding and grounding conductors are required in conduits, except when the conduits contain combinations of loop lead-in cable, fiber optic cable, or signal interconnect cable. A No. 8 minimum, bare copper wire shall run continuously in circuits, except for series lighting circuits, where No. 6 bare copper wire shall run continuously. The bonding wire size shall be increased to match the circuit breaker size in conformance with the Code, or shall be as shown on the plans. Conduits to be installed for future conductors, may omit the copper wire.

Bonding of metallic conduits in metal pull boxes shall be by means of bonding bushings and bonding jumpers connected to the bonding wire running in the conduit system.

The second paragraph of Section 86-2.10 of the Caltrans Standard Specifications is amended to read as follows:

Grounding jumper shall be attached by 3/8 inch or larger galvanized bolt in the signal standard or controller pedestal and shall be run to the conduit, ground electrode or bonding wire in adjacent pull box. Grounding jumper shall be visible after cap has been placed on foundation. All ground connections shall be watertight.

Ground electrodes shall be installed in conformance with the provision of the Code. A grounding electrode shall be installed in all electrical services and controller foundations. They shall be spaced a minimum of 6 feet apart.

The grounding electrode in the Controller Assembly shall be connected in parallel with the grounding electrode in the Service. This connection shall consist of a continuous solid #6 bare conductor. The ground connection shall be on the line side of the electrical entrance terminal block.

A continuous #6 bare copper conductor shall connect the ground bus in the electrical service, the grounding electrode in the service, the grounding electrode in the controller, and the ground entrance lug in the controller cabinet.

The equipment-bonding conductor for all standards shall be visible and accessible after completion of work.

10-3.11 SERVICE

Attention is directed to the requirements specified in Section 86-2.11, “Service,” of the Standard Specification and these special provisions.

Continuous welding of exterior seams in service equipment enclosures is not required.

Type III service equipment enclosures shall be the aluminum type.

Circuit breakers shall be the cable-in/cable-out type, mounted on non-energized clips. All circuit breakers shall be mounted vertically with the up position of the handle being the "ON" position.

Each service shall be provided with up to 2 main circuit breakers which shall disconnect ungrounded service entrance conductors. Where the "Main" circuit breaker consists of 2 circuit breakers as shown on the plans or required in the special provisions, each of the circuit breakers shall have a minimum interrupting capacity of 10,000 A, rms.

A 50-amp 120/240-volt Hart Lock receptacle shall be installed two inches below spare circuit breakers. A 60 amp 240 volt fuse block will be installed two inches to the left of the inside door latch, and one inch below door latch, and one inch below the test switch. Refer to the plans for further details. The base shall be reinforced with 3/8 inch aluminum or ¼ inch steel. A 2,000 pound hasp shall be installed in two locations on the circuit breaker door. The meter window will have a metal door cover. The metal shall be anodized aluminum.

There shall be a 55-amp, 120-volt transfer switch with external plug.

The service pedestal shall be installed a minimum of three (3) feet from the controller cabinet.

There shall be a one inch grouted section between the service and the foundation. A ¼ inch weep drain hole shall be installed in this grout section.

Section 86.2.11, “Service,” of the Standard Specifications, paragraph 4, is amended by adding the following text:

The Contractor shall request and coordinate with the serving utility, the installation of a kilowatt-meter. The written request shall be submitted not less than the number of working days, currently required by the utility, before the installation of a kilowatt-meter is required.

Section 86.2.11, “Service,” of the Standard Specifications, paragraphs 12 and 13, is amended to read:

The Contractor shall request and arrange with the serving utility to complete service connections for permanent installations, and the Contractor shall pay all costs and fees required by the utility. The written request shall be submitted not less than the number of working days, currently required by the utility, before service connections are required.

The Contractor shall be entitled to no extension of time or other compensation for any delay to his operations resulting from his failure to give the required advance written requests to the serving utility.

Full compensation for conforming to the provisions in this Section shall be considered as included in the contract lump sum price paid for “Signal and Lighting,” and no additional compensation will be allowed therefore.

10-3.12 NUMBERING ELECTRICAL EQUIPMENT

Self-adhesive reflective numbers and edge sealer will be Contractor-furnished in conformance with the provisions in "Materials" of these special provisions.

The numbers and edge sealer shall be placed on the equipment where designated by the Engineer.

Where new numbers are to be placed on existing or relocated equipment, the existing numbers shall be removed.

Reflective numbers shall be applied to a clean surface. Only the edges of the numbers shall be treated with edge sealer.

Where shown on the plans, 5-digit, self-adhesive equipment numbers shall be placed for all electroliers, soffit lighting, sign lighting, and service pedestals. On service pedestals, the numbers shall be placed on the front door. On electroliers, the numbers shall be placed as shown on the plans.

10-3.13 NUMBERING ELECTRICAL EQUIPMENT

Attention is directed to the requirements specified in Section 86-2.14, “Testing,” of the Standard Specification and these Special Provisions.

Before electrical power can be connected, the grounding electrodes shall be tested for earth ground resistance. The Contractor shall perform this ground resistance testing in the presence of the Engineer. The earth ground resistance shall be a maximum of 5 ohms.

Before the final insulation resistance test is performed, water shall be added to the conduit system as directed by the Engineer. The Contractor shall perform testing in the presence of the Engineer.

An initial insulation resistance test shall be performed on each inductive loop detector at the pull-box adjacent to the loop. The Contractor shall perform testing in the presence of the Engineer.

A final insulation resistance test shall be performed on the inductive loop detectors at the controller cabinet after said detectors have been installed in accordance with the details shown on the plans and the final splices have been made between the loop conductors and the lead-in cables.

10-3.14 MODEL 170 CONTROLLER ASSEMBLIES

Model 170 controller assemblies shall be furnished by the Contractor.

The Controller shall be the Caltrans Model 170E controller.

The Contractor shall furnish and install into the controller assembly, the latest version of Type 223 traffic signal program by BI Tran Systems, Inc. The BI Tran Systems, Inc. is located at 510 Bercut Drive, Suite R, Sacramento, CA 95814, telephone (916) 441-0260, fax (916) 441-0391.

The 332 controller cabinet shall be aluminum.

The controller cabinet shall have a 1” bead of clear silicone sealant applied immediately before installation between the foundation and the controller cabinet bottom. The bead shall be centered 2” in from the outer edge of the controller cabinet, around the entire perimeter. All excess silicone on the outer edges shall be cleaned off. The sealant shall be 35 year rated. There shall be no substitution for the silicone sealant.

Inductive loop detector sensor units shall be as specified in Section “Detectors,” of these Special Provisions.

In addition to the auxiliary equipment required to operate and control the system as shown on the plans and as specified in the Standard Specifications and these Special Provisions, each Model 170 controller assembly shall include the following:

1. Two 18-inch fluorescent lights in the cabinet, interfaced to a door switch on both the front and rear doors.

2. Each controller shall be configured with the C-20 connector, along with all other standard connections.

3. DB 9 connector panel connected by interface cable to run between the panel and C2 port of the type 170E controller. The connector panel should be accessible from the front side of the controller assembly. The connector panel shall allow for data interchange between the BI Tran “Quick Load” program and the controller using a lap top computer in the front of the controller cabinet.

4. Contractor shall supply a drawer shelf assembly to fit the Caltrans 332 cabinet. This drawer shelf assembly shall be equivalent to Safetran Traffic Systems Part Number 083266M332-00 or as shown in TEES dated November 19, 1999 on page 7-5-4. The drawer shelf assembly shall fit in a standard 19" rack and be a standard 1 ¾" high assembly. Two slide rails shall mount to right angle brackets on each side extending 4" from each rail to provide support for a controller. The right angle bracket shall be of such a length that each side mounts between the front and rear rails of the 332 cabinet. The

drawer shelf unit shall be mounted on the two rail slides extending a minimum of 14" beyond the front mounting. The drawer dimensions shall be a minimum 13" deep, 1 2/5" thick, and the width is such that the sides are attached to the two rail slides. A top cover shall be provided which shall swivel or be hinged at the back. A means to easily grasp and lift the cover shall be provided. A mat of at least 1/12" thick plastic material shall cover the outside top portion of the lid where objects such as a notebook computer may be placed. The material of the drawer assembly shall be comparable to other components in the 332 cabinet

The Model 170 controller assemblies, including Model 170E controller, shall be tested in compliance with Section 86-2.14, "Testing," of the Standard Specifications except that the Contractor shall be required, at his expense, to shop-test the complete 170 controller assemblies at an independent laboratory authorized by the Engineer to test materials and work involved in the contract. The current County-approved testing laboratory is the Traffic Signal Maintenance, Inc (Peek Traffic). The Traffic Signal Maintenance, Inc. is located at 3375 Woodward Avenue, Santa Clara, CA 95054-2319, telephone (408) 988-5541.

The Contractor shall provide the Engineer a Certificate of Compliance from the manufacturer, in conformance with the provisions of Section 6-1.07, "Certificates of Compliance", of the Standard Specifications. The certificate shall certify that the Model 170 Controller Assemblies comply with the requirements of these specifications, including the requirements in "Transportation Electrical Equipment Specifications" (TEES), and "Traffic Signal Control Equipment Specifications" (TSCES), issued by the State of California, Department of Transportation, and to all addendums thereto current at the time of project advertising. The certificate shall also include a copy of all applicable test reports on the controller assemblies.

The Contractor shall arrange to have a signal technician, qualified to work on the controller unit and employed by the controller unit manufacturer, or the manufacturer's representative, present at the time the equipment is turned on at the work site. The signal technician shall check all leads, vehicular and pedestrian phases, emergency vehicle preemption, conflict monitoring card, and shall install initial timing plans to ensure proper operation of the traffic signalas shown on the plans and as specified in these Special Provisions.

10-3.15 VEHICLE SIGNAL FACES AND SIGNAL HEADS

All vehicle signal sections shall be 12-inch.

Each signal section housing shall be mold-cast aluminum.

Each signal sections shall have aluminum visor, tunnel type (bottom open).

Each vehicle signal face shall have aluminum backplate.

Mounting for mast arm mounted signal sections shall be bronze metal.

10-3.16 LIGHT EMITTING DIODE SIGNAL MODULE

Traffic signal faces with 12-inch sections, or arrow sections shall use light emitting diode (LED) signal modules as the light source in conformance with these special provisions

All signal sections shall be 12-inch full type (no outline) LED display

GENERAL

Type 1 LED signal modules shall be installed in the doorframes of standard traffic signal housings. Lamp sockets, reflectors, reflector holders and lenses used with incandescent lamps shall not be used when Type 1 LED signal modules are installed.

LED signal modules, including green, yellow, red, circular balls and arrow indications shall be from the same manufacturer, and each size shall be the same model.

Type 1 LED signal modules shall be sealed units with two color-coded conductors for power connection, a printed circuit board, a power supply, a lens and a gasket. LED signal modules shall be weatherproof after installation and connection. Circuit boards and power supplies shall be contained inside Type 1 LED signal modules. Circuit boards shall conform to the requirements in Chapter 1, Section 6 of the "Transportation Electrical Equipment Specifications," (TEES) published by the Department.

Conductors for Type 1 LED signal modules shall be 3 feet in length with quick disconnect terminals attached, and shall conform to the provisions in Section 86-4.01C, "Electrical Components," of the Standard Specifications.

Lenses of Type 1 LED signal modules shall be integral to the units, shall be convex with a smooth outer surface and shall be made of ultraviolet (UV) stabilized plastic or glass. The lenses shall be capable of withstanding ultraviolet exposure from direct sunlight for a minimum period of 36 months without exhibiting evidence of deterioration.

Type 1 LED signal modules shall be sealed in doorframes with one-piece ethylene propylene rubber (EPDM) gaskets.

LEDs used in signal modules shall be of Aluminum Indium Gallium Phosphide (AlInGaP) technology for red and yellow indications and of Gallium Nitride (GaN) technology for green indications. LEDs shall be the ultra bright type rated for 100,000 hours of continuous operation from -40˚C to +74˚C.

Individual LEDs shall be wired so that a total failure of one LED will result in the loss of not more than 5 percent of the signal module light output. Failure of an individual LED in a string shall not result in the loss of the entire string or any other indication.

Maximum power consumption requirements for LED signal modules shall be as follows:

LED Signal Module	Power Consumption in Watts					
	Red		Yellow		Green	
	25°C	74°C	25°C	74°C	25°C	74°C
12-inch circular	11	17	22	25	12	12
8-inch circular	8	13	13	16	10	10
12-inch arrow	9	12	10	12	13	13

PHYSICAL AND MECHANICAL REQUIREMENTS

Installation of LED signal modules shall only require the removal of the optical unit components such as the lens, lamp module, gaskets and reflector. LED signal modules shall be weather tight, fit securely to the housing and connect directly to electrical wiring.

Arrow modules shall conform to the requirements in Section 9.01 of the Institute of Transportation Engineers (ITE) Publication: Equipment and Materials Standards, "Vehicle Traffic Control Signal Heads" for arrow indications. LEDs shall be spread evenly across the illuminated portion of the arrow area.

LED Signal Module Lens

The LED signal module shall be capable of replacing the optical unit. The lens may be tinted or may use transparent film or materials with similar characteristics to enhance "ON/OFF" contrasts. The use of tinting or other materials to enhance "ON/OFF" contrast shall not affect chromaticity and shall be uniform across the face of the lens.

If a polymeric lens is used, a surface coating or chemical surface treatment shall be used to provide front surface abrasion resistance.

Environmental Requirements

LED signal modules shall be rated for use in the operating temperature range of -40˚C to +74˚C.

LED signal modules shall be protected against dust and moisture intrusion in conformance with the requirements in NEMA Standard 250 for Type 4 enclosures to protect internal components.

Construction

LED signal modules shall be single, self-contained devices, not requiring on-site assembly for installation into existing traffic signal housings. The power supply for LED signal modules shall be integral to the module.

Assembly and manufacturing processes for LED signal modules shall be designed to assure all internal components will be adequately supported to withstand mechanical shock and vibration from high winds and other sources.

Materials

Materials used for lenses and LED signal modules shall conform to the requirements in ASTM Specifications for the materials.

Enclosures containing the power supply or electronic components of LED signal modules shall be made of UL94VO flame-retardant materials. Lenses of LED signal modules are excluded from this requirement.

Module Identification

LED signal modules shall have the manufacturer's name, trademark, model number, serial number, lot number, month and year of manufacture, and required operating characteristics permanently marked on the back of the module. Required operating characteristics shall include rated voltage, power consumption and volt-ampere (VA).

Type 1 LED signal modules shall have prominent and permanent vertical markings for correct indexing and orientation within the signal housings. Markings shall consist of an up arrow or the word "UP" or "TOP."

PHOTOMETRIC REQUIREMENTS

Initial luminous intensity values for LED signal modules, operating at 25˚C, shall meet or exceed the following minimum values:

Circular Indications (in cd)

	8-inch			12-inch		
Angle (v,h)	Red	Yellow	Green	Red	Yellow	Green
2.5, ±2.5	157	314	314	399	798	798
2.5, ±7.5	114	228	228	295	589	589
2.5, ±12.5	67	133	133	166	333	333
2.5, ±17.5	29	57	57	90	181	181
7.5, ±2.5	119	238	238	266	532	532
7.5, ±7.5	105	209	209	238	475	475
7.5, ±12.5	76	152	152	171	342	342
7.5, ±17.5	48	95	95	105	209	209
7.5, ±22.5	21	43	43	45	90	90
7.5, ±27.5	12	24	24	19	38	38
12.5, ±2.5	43	86	86	59	119	119
12.5, ±7.5	38	76	76	57	114	114
12.5, ±12.5	33	67	67	52	105	105
12.5, ±17.5	24	48	48	40	81	81
12.5, ±22.5	14	29	29	26	52	52
12.5, ±27.5	10	19	19	19	38	38
17.5, ±2.5	19	38	38	26	52	52
17.5, ±7.5	17	33	33	26	52	52
17.5, ±12.5	12	24	24	26	52	52
17.5, ±17.5	10	19	19	26	52	52
17.5, ±22.5	7	14	14	24	48	48
17.5, ±27.5	5	10	10	19	38	38

Arrow Indications (foot-lamberts)

	Red	Yellow	Green
Arrow Indication	1,600	3,200	3,200

LED signal modules shall meet or exceed the following minimum illumination values for a minimum period of 36 months, based on normal use in traffic signal operation over an operating temperature range of -40˚C to +74˚C. In addition, yellow LED signal modules shall meet or exceed the following minimum illumination values for a minimum period of 36 months, based on normal use in traffic signal operation at 25˚C:

Circular Indications (in cd)

	8-inch			12-inch		
Angle (v,h)	Red	Yellow	Green	Red	Yellow	Green
2.5, ±2.5	133	267	267	339	678	678
2.5, ±7.5	97	194	194	251	501	501
2.5, ±12.5	57	113	113	141	283	283
2.5, ±17.5	25	48	48	77	154	154
7.5, ±2.5	101	202	202	226	452	452
7.5, ±7.5	89	178	178	202	404	404
7.5, ±12.5	65	129	129	145	291	291
7.5, ±17.5	41	81	81	89	178	178
7.5, ±22.5	18	37	37	38	77	77
7.5, ±27.5	10	20	20	16	32	32
12.5, ±2.5	37	73	73	50	101	101
12.5, ±7.5	32	65	65	48	97	97
12.5, ±12.5	28	57	57	44	89	89
12.5, ±17.5	20	41	41	34	69	69
12.5, ±22.5	12	25	25	22	44	44
12.5, ±27.5	9	16	16	16	32	32
17.5, ±2.5	16	32	32	22	44	44
17.5, ±7.5	14	28	28	22	44	44
17.5, ±12.5	10	20	20	22	44	44
17.5, ±17.5	9	16	16	22	44	44
17.5, ±22.5	6	12	12	20	41	41
17.5, ±27.5	4	9	9	16	32	32

Arrow Indications (foot-lamberts)

	Red	Yellow	Green
Arrow Indication	1,600	3,200	3,200

Measured chromaticity coordinates of LED signal modules shall conform to the chromaticity requirements of the following table, for a minimum period of 36 months, over an operating temperature range of -40˚C to +74˚C.

Chromaticity Standards

Red	Y: not greater than 0.308, or less than 0.998 -x
Yellow	Y: not less than 0.411, nor less than 0.995 - x, nor less than 0.452
Green	Y: not less than 0.506 - 0.519x, nor less than 0.150 + 1.068x, nor more than 0.730 - x

LED signal modules tested or submitted for testing shall be representative of typical production units. Circular LED modules shall be tested in conformance with California Test 604. Optical testing shall be performed with LED signal modules mounted in standard traffic signal sections without visors or hoods attached to the signal sections.

LEDs for arrow indications shall be spread evenly across the illuminated portion of the arrow area. Arrow LED signal modules shall be tested in conformance with California Test 3001. Optical testing shall be performed with LED signal modules mounted in standard traffic signal sections without visors or hoods attached to the signal sections. LED arrow signal section

indication shall provide minimum initial luminous intensity as listed herein. Measurements shall be performed at the rated operating voltage of 120 V (ac).

ELECTRICAL

Maximum power consumption requirements for LED signal modules shall not exceed those listed in "General." LED signal modules shall operate at a frequency of 60 Hz ±3 Hz over a voltage range from 95 V (ac) to 135 V (ac) without perceptible flicker. Fluctuations of line voltage shall have no visible effect on luminous intensity of the indications. Rated voltage for all measurements shall be 120 V (ac).

Wiring and terminal blocks shall conform to the requirements of Section 13.02 of the ITE Publication: Equipment and Material Standards, (Vehicle Traffic Control Signal Heads). Two secured, color coded, 3 feet long, 600 V, 20 AWG minimum, jacketed wires, conforming to the National Electronic Code, rated for service at +105˚C, shall be provided for electrical connection for each Type 1 LED signal module.

LED signal module on-board circuitry shall include voltage surge protection to withstand high repetition noise transients in conformance with the requirements in Section 2.1.6 of NEMA Standard TS2.

LED signal modules shall be operationally compatible with currently used controller assemblies including solid state load switches, flashers and conflict monitors. When a current of 20 milliamperes (ac) or less is applied to the unit, the voltage read across the two leads shall be 15 V (ac) or less.

LED signal modules and associated on-board circuitry shall conform to the requirements in Federal Communications Commission (FCC) Title 47, SubPart B, Section 15 regulations concerning the emission of electronic noise.

LED signal modules shall provide a power factor of 0.90 or greater.

Total harmonic distortion from current and voltage induced into an alternating current power line by LED signal modules shall not exceed 20 percent at an operating temperature of 25˚C.

QUALITY CONTROL PROGRAM

LED signal modules shall be manufactured in conformance with a vendor quality control (QC) program. The QC program shall include two types of testing: (1) design qualification and (2) production quality. Production quality testing shall include statistically controlled routine tests to ensure minimum performance levels of LED signal modules built to meet these specifications.

Documentation of the QC process and test results shall be kept on file for a minimum period of seven years.

LED signal module designs not satisfying design qualification testing and the production quality testing performance requirements specified herein shall not be labeled, advertised or sold as conforming to these specifications.

Identification of components and subassemblies of LED signal modules, which may affect reliability and performance, shall be traceable to the original manufacturers.

Design Qualification Testing

Design qualification testing (DQT) shall be performed by the manufacturer or an independent testing lab hired by the manufacturer on new LED signal module designs, and on existing

designs when a major design change has been implemented. Failure to conform to the requirements of any design qualification test shall be cause for rejection.

A major design change is defined as a design change, electrical or physical, which changes any of the performance characteristics of the LED signal module, results in a different circuit configuration for the power supply, or changes the layout of the individual LEDs in the signal module.

Two LED modules for each design shall be used for DQT. The two LED signal modules shall be selected at random. These signal modules shall be submitted to the Transportation Laboratory after the DQT is complete. Testing data shall be submitted with the modules to the Transportation Laboratory for verification of DQT data.

LED signal modules shall be energized for a minimum of 24 hours, at 100 percent on-time duty cycle, at a temperature of 74˚C before performing any DQT.

After burn-in, LED signal modules shall be tested for rated initial luminous intensity in conformance with the provisions in "Photometric Requirements." Before measurement, LED signal modules shall be energized at rated voltage, with 100 percent on-time duty cycle, for a time period of 30 minutes. Photometrics, luminous intensity and color measurements for yellow LED signal modules shall be taken immediately after the modules are energized. The ambient temperature for these measurements shall be 25˚C. Test results for this testing shall record the current, voltage, total harmonic distortion (THD) and power factor (PF) associated with each measurement.

LED signal modules shall be tested by measuring for chromaticity (color) in conformance with the provisions in "Photometric Requirements." A spectra radiometer shall be used for this measurement. The ambient temperature for this measurement shall be 25˚C.

LED signal modules shall be tested by measuring the current flow in amperes. The measured current values shall be used for quality comparison of production quality assurance on production modules.

LED signal modules shall be tested by measuring the power factor. A commercially available power factor meter may be used to perform this measurement.

LED signal modules shall be tested by measuring the total harmonic distortion. A commercially available total harmonic distortion meter may be used to perform this measurement.

LED signal modules shall be tested in conformance with the provisions in "Electrical," with reference to Class A emission limits referenced in Federal Communications Commission (FCC) Title 47, SubPart B, Section 15.

LED signal modules shall be tested for compatibility with the controller unit, conflict monitor and load switch. Each signal module shall be connected to the output of a standard load switch connected to an alternating current voltage supply between the values of 95 V (ac) and 135 V (ac) with the input to the load switch in the "OFF" position. The alternating current voltage developed across each LED signal module so connected shall not exceed 15 V rms as the input alternating current voltage is varied from 95 V (ac) rms to 135 V (ac) rms.

LED signal modules shall be tested for transient immunity in conformance with the provisions in "Electrical," and conforming to the procedure described in NEMA Standard TS2.

Mechanical vibration testing shall be performed on LED signal modules in conformance with the requirements in MIL-STD-883, Test Method 2007, using three 4-minute cycles along each x, y, and z axis, at a force of 2.5 Gs, with a frequency sweep from 2 Hz to 120 Hz. The loosening of the lens, internal components, or other physical damage shall be cause for rejection.

Temperature cycling shall be performed on LED signal modules in conformance with the requirements of MIL-STD-883, Test Method 1010. The temperature range shall conform to the provisions in "Environmental Requirements." A minimum of 20 cycles shall be performed with a 30 minute transfer time between temperature extremes and a 30 minute dwell time at each temperature. LED signal module under test shall be non-operating. Failure of LED signal modules to function properly or evidence of cracking of LED signal module lenses or housings after temperature cycling shall be cause for rejection.

Moisture resistance testing shall be performed on LED signal modules in conformance with the requirements in NEMA Standard 250 for Type 4 enclosures. Evidence of internal moisture after testing shall be cause for rejection.

Production Quality Testing

Production quality testing shall be performed on each LED signal module prior to shipment. Failure to conform to the requirements of any production quality test shall be cause for rejection. The manufacturer shall retain test results for seven years for warranty purposes.

LED signal modules shall be tested for rated initial intensity after burn-in. The burn-in period shall consist of signal modules being energized at rated voltage for a 30 minute stabilization period before the measurements are made. A single point measurement with a correlation to the minimum initial luminous intensity requirements of "Photometric Requirements" for circular modules may be used. The ambient temperature for this measurement shall be +25°C.

LED signal modules shall be tested for luminous intensity requirements in "Photometric Requirements."

LED signal modules shall be tested for required power factor after burn-in.

LED signal modules shall be tested by measuring current flow in amperes after burn-in. The measured current values shall be compared against current values resulting from design qualification measurements under "Design Qualification Testing." The current flow shall not exceed the rated value. The measured ampere values with rated voltage shall be recorded as volt-ampere (VA) on the product labels.

LED signal modules shall be visually inspected for any exterior physical damage or assembly anomalies. The surface of the lens shall be free of scratches, abrasions, cracks, chips, discoloration, or other defects. Any such defects shall be cause for rejection.

CERTIFICATE OF COMPLIANCE

The Contractor shall provide the Engineer a Certificate of Compliance from the manufacturer, in conformance with the provisions of Section 6-1.07, "Certificates of Compliance," of the Standard Specifications. The certificate shall certify that the LED signal modules comply with the requirements of these specifications. The certificate shall also include a copy of all applicable test reports on the LED signal modules.

QUALITY ASSURANCE TESTING (RANDOM SAMPLE TESTING)

The State may perform random sample testing on all shipments. Random sample testing will be completed within 30 days after delivery to the Transportation Laboratory. Circular LED signal modules shall be tested in conformance with California Test 604 and these special provisions. Arrow signal modules shall be tested in conformance with California Test 3001 and these special provisions. Optical testing shall be performed with the module mounted in a

standard traffic signal section, but without a visor or hood attached to the section or housing. The number of modules tested shall be determined by the quantity of each model in the shipment. The sample size shall conform to ANSI/ASQC Z1.4. The Transportation Laboratory shall determine the sampling parameters to be used for the random sample testing. All parameters of the specification may be tested on the modules. Acceptance or rejection of the shipment shall conform to ANSI/ASQC Z1.4 for random sampled shipments.

WARRANTY

The manufacturer shall provide a written warranty against defects in materials and workmanship for LED signal modules for a period of 36 months after installation of LED signal modules. Replacement LED signal modules shall be provided within 5 days after receipt of failed LED signal modules at no cost to the State, except the cost of shipping the failed modules. All warranty documentation shall be given to the Engineer prior to installation. Replacement LED signal modules shall be delivered to the Placer County Road Maintenance Office at 11428 F Avenue, Auburn, CA 95603.

10-3.17 BATTERY BACKUP SYSTEM

The contractor shall furnish and install an exterior Uninterrupted Power Supply Battery Backup System (BBS). The equipment shall be TESCO 22 BBS 1400XL or the County approved demonstrated equal. If approved equals are substituted, the equipment shall be 100% compatible with the County's existing BBS system.

The BBS shall meet or exceed the latest Caltrans' specifications posted on the Caltrans website: www.dot.ca.gov/hq/esc/ttsb/electrical/Oct2003.pdf.

The batteries shall have a written warranty against defects in materials and workmanship from the manufacturer prorated for a period of 60 months after installation. The Contractor shall provide the Engineer with all warranty documentation prior to installation. Replacement batteries shall be provided within 5 days after receipt of failed batteries at no cost to the County except the cost of shipping the failed batteries. Replacement batteries shall be delivered to the Placer County Road Maintenance Office at 11428 F Avenue, Auburn, CA 95603.

MEASUREMENT AND PAYMENT

Each battery backup system will be measured as a complete unit.

The contract unit price paid for battery backup system shall include full compensation for furnishing all labor, materials , tools, equipment, and incidentals and for doing all the work involved in installing the battery backup system, complete in place, as shown on the plans, as specified in the Standard Specifications and these special provisions, and as directed by the Engineer.

10-3.18 PEDESTRIAN SIGNALS

Type A pedestrian signals faces shall be aluminum.

Front screen shall be plastic.

Pedestrian head mounts shall be clam shell type with bronze mounting hardware. Mounting shall include one Allen head screw for opening and all wiring shall be quick connect type (plug in).

Pedestrian heads shall be mounted on the intersection side of the signal pole unless otherwise directed by the Engineer.

10-3.19 LIGHT EMITTING DIODE PEDESTRIAN SIGNAL FACE MODULES

Light emitting diode (LED) pedestrian signal face (PSF) modules shall be installed in standard Type A pedestrian signal housing, "UPRAISED HAND" and "WALKING PERSON," and shall use light emitting diodes as the light source as shown on the plans and in conformance with these special provisions.

Each PSF module shall also include "COUNTDOWN SEQUENCE" display in conformance with the requirements of the California MUTCD 2006 Edition.

All PSF modules shall be full (no outline) display.

2-Row 9” high countdown digits shall be MUTCD compliant for crosswalks over 100 ft.

All PSF modules shall have full preemption compatibility and shall automatically adjusts to traffic controller interval changes.

GENERAL

PSF modules shall be designed to mount in standard Type A housings. PSF modules shall be designed to mount behind or replace face plates of standard Type A housings in conformance with the requirements of the Institute of Transportation Engineers (ITE) Standards: "Pedestrian Traffic Control Signal Indications" and the "California MUTCD". Where existing Type A pedestrian signal faces contain both incandescent and LED light sources, both light sources shall be removed and replaced by a new LED pedestrian signal face module in conformance with these special provisions.

PSF modules used on this project shall be from a single manufacturer.

Circuit boards and power supplies shall be contained inside the LED modules. Circuit boards shall conform to the requirements in Chapter 1, Section 6 of the "Transportation Electrical Equipment Specifications," (TEES) published by the Department.

PSF modules shall fit into existing Type A housings and shall not require a specific mounting orientation and shall not vary in light output, pattern or visibility for any mounting orientation.

LEDs for "UPRAISED HAND" symbols shall utilize Aluminum Indium Gallium Phosphide (AlInGaP) technology and shall be the ultra bright type rated for 100,000 hours of continuous operation from -40°C to +74°C.

Individual LEDs shall be wired so that a total failure of one LED will result in the loss of not more than 5 percent of the PSF module light output. Failure of an individual LED in a string shall not result in the loss of the entire string or any other indication.

PSF modules tested and those submitted for testing shall be representative of typical production units. PSF modules shall be tested in conformance with California Test 610 and as specified herein.

Luminance Requirements

Luminance of the "UPRAISED HAND" symbol shall be 1,100-foot lamberts minimum. Color of "UPRAISED HAND" shall be Portland orange conforming to the requirements of the ITE Standards: "Pedestrian Traffic Control Signal Indications" and the "California MUTCD."

Luminance of the "WALKING PERSON" symbol shall be 1,550-foot lamberts minimum. Color of "WALKING PERSON" shall be white (Luminous Tubing) conforming to the requirements of the ITE Standards: "Pedestrian Traffic Control Signal Indications" and the "California MUTCD."

Height and width of each symbol shall not be less than 10 inches and 6 1/2 inches respectively. Uniformity ratio of illuminated symbols shall not exceed 4 to 1 between the highest luminance area and the lowest luminance area.

PSF modules shall be rated for a minimum useful life of 36 months and shall maintain at least 85 percent of 1,100-foot lamberts for "UPRAISED HAND" symbols and 85 percent of 1,550-foot lamberts for "WALKING PERSON" symbols after 36 months of continuous use in traffic signal operation over a temperature range of -40°C to +74°C.

Physical and Mechanical Requirements

PSF modules shall be designed as retrofit replacement for existing optical units of signal lamps, or existing pedestrian signal faces with both LED and incandescent light sources, and shall not require special tools for installation. PSF modules shall fit into pedestrian signal section housings built in conformance with the ITE Publication: Equipment and Materials Standards, Chapter 2 "Vehicle Traffic Control Signal Heads" (VTCSH) without modification to the housing.

Environmental Requirements

PSF modules shall be rated for use in the operating temperature range of -40°C to +74°C.

Construction

PSF modules shall be single, self-contained devices, not requiring on-site assembly for installation into standard Type A housings. Power supplies for PSF modules shall be integral to the modules.

Assembly and manufacturing processes for PSF modules shall be designed to assure all internal components will be adequately supported to withstand mechanical shock and vibration from high winds and other sources.

Materials

Material used for PSF modules shall conform to the requirements in ASTM specifications for the materials.

Enclosures containing either the power supply or electronic components of the PSF module shall be made of UL94VO flame-retardant materials.

Module Identification

PSF modules shall have the manufacturer's name, trademark, model number, serial number, lot number, month and year of manufacture, and required operating characteristics permanently

marked on the back of the module. Required operating characteristics shall include rated voltage, power consumption and volt-ampere (VA).

Type A pedestrian signal face, combination "UPRAISED HAND"/"WALKING PERSON" section, housings without the reflectors shall be used for PSF modules.

PHOTOMETRIC REQUIREMENTS

PSF modules shall maintain at least 85 percent of the following luminous intensity values over 36 months of continuous use in signal operation over the temperature range of -40°C to +74°C. In addition, PSF modules shall meet or exceed the following luminous intensity values upon initial testing at 25°C.

PSF module	Luminous Intensity
UPRAISED HAND	1,100-foot lamberts
WALKING PERSON	1,550-foot lamberts

The measured chromaticity coordinates of PSF modules shall conform to the requirements for chromaticity in Section 5.3.2.1 and Figure C of the VTCSH standards.

ELECTRICAL

PSF module power consumption shall not exceed the following maximum values:

PSF module	Power Consumption @ 25°C	Power Consumption @ 74°C
UPRAISED HAND	10.0 W	12.0 W
WALKING PERSON	12.0 W	15.0 W

PSF modules shall operate at a frequency of 60 Hz ±3 Hz over a voltage range from 95 V (ac) to 135 V (ac) without perceptible flicker. Fluctuations of line voltage shall have no visible effect on the luminous intensity of the indications. Rated voltage for all measurements shall be 120 V (ac).

PSF module on-board circuitry shall include voltage surge protection to withstand high-repetition noise transients in conformance with the requirements in Section 2.1.6 of NEMA Standard TS2.

Wiring and terminal blocks shall conform to the requirements of Section 13.02 of the ITE Publication: Equipment and Material Standards, "Vehicle Traffic Control Signal Heads."

PSF modules shall be operationally compatible with currently used controller assemblies including solid state load switches, flashers and conflict monitors. When a current of 20 milliamperes (ac) or less is applied to the unit, the voltage read across the two leads shall be 15 V (ac) or less.

PSF modules and associated on-board circuitry shall conform to the requirements in Federal Communications Commission (FCC) Title 47, SubPart B, Section 15 regulations concerning the emission of electronic noise.

PSF modules shall provide a power factor of 0.90 or greater.

Total harmonic distortion from current and voltage induced into an alternating current power line by PSF modules shall not exceed 20 percent at an operating temperature of 25°C.

QUALITY CONTROL PROGRAM

PSF modules shall be manufactured in conformance with a vendor quality control (QC) program. The QC program shall include two types of testing: (1) design qualification and (2) production quality. Production quality testing shall include statistically controlled routine tests to ensure minimum performance levels of PSF modules built to meet these specifications.

Documentation of the QC process and test results shall be kept on file for a minimum period of seven years.

PSF module designs not satisfying design qualification testing and the production quality testing performance requirements specified herein shall not be labeled, advertised or sold as conforming to these specifications.

Identification of components and subassemblies of PSF modules, which may affect reliability and performance, shall be traceable to the original manufacturers.

Design Qualification Testing

Design qualification testing (DQT) shall be performed by the manufacturer or an independent testing lab hired by the manufacturer on new PSF module designs, and on existing designs when a major design change has been implemented. Failure to conform to the requirements of any design qualification test shall be cause for rejection.

A major design change is defined as a design change, electrical or physical, which changes any of the performance characteristics of the PSF module, results in a different circuit configuration for the power supply, or changes the layout of the individual LEDs in the PSF module.

Two PSF modules for each design shall be used for DQT. The two PSF modules shall be selected at random. These PSF modules shall be submitted to the Transportation Laboratory after the DQT is complete. The testing data shall be submitted with the PSF modules to the Transportation Laboratory for verification of DQT data.

The PSF modules shall be energized for a minimum of 24 hours, at 100 percent on-time duty cycle, at a temperature of 74°C before performing any DQT.

After burn-in, the PSF modules shall be tested for rated initial luminous intensity in conformance with the provisions in "Photometric Requirements." Before measurement, PSF modules shall be energized at rated voltage, with 100 percent on-time duty cycle, for a time period of 30 minutes. The ambient temperature for these measurements shall be 25°C. The test results shall include the recorded current, voltage, total harmonic distortion (THD) and power factor (PF) associated with each measurement.

PSF modules shall be tested by measuring for chromaticity (color) in conformance with the provisions in "Photometric Requirements." A spectra radiometer shall be used for these measurements. The ambient temperature for these measurements shall be 25°C.

PSF modules shall be tested by measuring for current flow in amperes. The measured current values shall be used for comparison of production quality assurance on production modules.

PSF modules shall be tested by measuring for power factor. A commercially available power factor meter may be used to perform this measurement.

PSF modules shall be tested by measuring for total harmonic distortion. A commercially available total harmonic distortion meter may be used to perform this measurement.

PSF modules shall be tested in conformance with the provisions in "Electrical," with reference to Class A emission limits referenced in Federal Communications Commission (FCC) Title 47, SubPart B, Section 15.

PSF modules shall be tested for compatibility with the controller unit, conflict monitor and load switch. Each PSF module shall be connected to the output of a standard load switch connected to an alternating current voltage supply between the values of 95 V (ac) and 135 V (ac) with the input to the load switch in the "OFF" position. The alternating current voltage developed across each PSF module shall not exceed 10 V rms as the input alternating current voltage is varied from 95 V (ac) rms to 135 V (ac) rms.

PSF modules shall be tested for transient immunity in conformance with the provisions in "Electrical" and conforming to the procedure described in NEMA Standard TS2.

Mechanical vibration testing shall be performed on PSF modules in conformance with the requirements in MIL-STD-883, Test Method 2007, using three 4-minute cycles along each x, y, and z axis, at a force of 2.5 Gs, with a frequency sweep from 2 Hz to 120 Hz. The loosening of the lens, of any internal components, or other physical damage shall be cause for rejection.

Temperature cycling shall be performed on PSF modules in conformance with the requirements of MIL-STD-883, Test Method 1010. The temperature range shall conform to the provisions in "Environmental Requirements." A minimum of 20 cycles shall be performed with a 30 minute transfer time between temperature extremes and a 30 minute dwell time at each temperature. Signal under test shall be non-operating. Failure of PSF modules to function properly or evidence of cracking of PSF module lenses or housings after temperature cycling shall be cause for rejection.

Moisture resistance testing shall be performed on PSF modules in conformance with the requirements in NEMA Standard 250 for Type 4 enclosures. Evidence of internal moisture after testing shall be cause for rejection.

Production Quality Testing

Production quality tests shall be performed on each PSF module prior to shipment. Failure to conform to the requirements of any production quality tests shall be cause for rejection. The manufacturer shall retain test results for seven years for warranty purposes.

PSF modules shall be tested for rated initial intensity after burn-in. The burn-in period shall consist of signal modules being energized at rated voltage for a 30 minute stabilization period before the measurements are made.

PSF modules shall be tested for luminous intensity requirements in "Photometric Requirements."

PSF modules shall be tested for required power factor after burn-in.

PSF modules shall be tested by measuring current flow in amperes after burn-in. The measured current values shall be compared against current values resulting from design qualification measurements under "Design Qualification Testing." The current flow shall not exceed the rated value. The measured ampere values with rated voltage shall be recorded as volt-ampere (VA) on the product labels.

PSF modules shall be visually inspected for any exterior physical damage or assembly anomalies. The surface of the lens shall be free of scratches, abrasions, cracks, chips, discoloration, or other defects. Any such defects shall be cause for rejection.

CERTIFICATE OF COMPLIANCE

The Contractor shall provide the Engineer a Certificate of Compliance from the manufacturer, in conformance with the provisions of Section 6-1.07, "Certificates of Compliance," of the Standard Specifications. The certificate shall certify that the PSF modules comply with the requirements of these specifications. The certificate shall also include a copy of all applicable test reports on the PSF modules.

QUALITY ASSURANCE TESTING (RANDOM SAMPLE TESTING)

The State may perform random sample testing on all shipments. Random sample testing will be completed within 30 days after delivery to the Transportation Laboratory. PSF modules shall be tested in conformance with California Test 606 and these special provisions. Optical testing shall be performed with the module mounted in a standard traffic signal section or in a standard Type A pedestrian housing, but without a visor or hood attached to the section or housing. The number of modules tested shall be determined by the quantity of each model in the shipment. The sample size shall conform to ANSI/ASQC Z1.4. The Transportation Laboratory shall determine the sampling parameters to be used for the random sample testing. All parameters of the specification may be tested on the modules. Acceptance or rejection of the shipment shall conform to ANSI/ASQC Z1.4 for random sampled shipments.

WARRANTY

The manufacturer shall provide a written warranty against defects in materials and workmanship for the PSF modules for a period of 36 months after installation of the PSF modules. Replacement PSF modules shall be provided within 5 days after receipt of failed PSF modules at no cost to the State, except the cost of shipping the failed modules. All warranty documentation shall be given to the Engineer prior to installation. Replacement PSF modules shall be delivered to the Placer County Road Maintenance Office at 11428 F Avenue, Auburn, CA 95603.

10-3.20 SIGNAL MOUNTING ASSEMBLIES

The first paragraph of Section 86-4.08, “Signal Mounting Assemblies”, of the Standard Specifications is amended to read:

Signal mounting assemblies shall consist of 1 ½ C galvanized steel pipe or galvanized conduit, necessary fittings, slip-fitters and terminal compartments. Pipe fittings shall be galvanized steel or bronze. Mast arm slip-fitters, post top slip-fitters and terminal compartments shall be cast bronze. After installation any exposed threads of galvanized conduit brackets and areas of brackets damaged by wrench or vise jaws shall be cleaned with a wire brush and painted with 2 (two) applications of approved unthinned zinc-rich primer (organic vehicle type) conforming to the requirements in Section 91, “Paint”, and one coat of dark olive green outdoor latex paint. Aerosol cans shall not be used.

Signal mast arm mounted four (4) section displays shall be type MAS-4C.

Extra support shall be incorporated whenever the following conditions arise:

1. The use of a SV-3-TA or SV-3-TB display.

2. If any display on a side mount is larger than a 3-section 12” display.

The extra support method shall consist of a 1” stand off w/ ¼” X 20 threaded hole. The stand-off shall be banded to the signal standard, 3” below the bottom of the top slip fitting of the displays’ 1 ½ inch riser. A ¼ inch hole shall be drilled in the center of the 1 ½ inch riser to match the position of the thread hole on the stand-off. The riser shall be attached to the standoff with a ¼” X 20 bolt, which shall include a lock washer and flat washer.

All signal display mounting assembly top members shall be watertight. The watertight sealing method shall be a ½” thick layer of clear silicone around the top jointing member of all displays. Additional sealant shall be installed in the same manner on all plugs installed in the top of any signal display. Rubber washers used for water-sealing the top assembly shall not be permitted on any display framework or MAT mounting.

All MAT mounted signal display shall have only one (1) serrated washer installed between the lock nut and display.

All MAT and MAS mounts shall be sealed with approved clear silicone around the tenon attachment area, including the through bolt and tenon openings. The sealant shall be 35 year rated. There shall be no substitution for the silicone sealant.

Where no vehicle or pedestrian display is to be installed on the side of a signal pole, a terminal compartment only shall be installed on the signal pole at the vehicle display position. All signal display wiring from the signal mast arm shall terminate at this location.

10-3.21 DETECTORS

Loop detector sensor units shall be Contractor-furnished.

Loop wire shall be Type 2.

Loop detector lead-in cable shall be Type B copper. Tinned copper shall not be permitted.

Slots shall be filled with or hot-melt rubberized asphalt sealant.

The depth of loop sealant above the top of the uppermost loop wire in the sawed slots shall be 2 inches, minimum.

Prior to saw cutting, the Engineer will verify all loop locations. The contractor shall give 48 hours notice to the Engineer prior to the required loop verification.

Adjacent loops on the same sensor unit channel shall be wound in opposite directions ~~.~~ All loops shall be wound in a manner such that any adjacent loop will be wound in the opposite direction. The loop at the limit line, closest to the center median (lane 1), shall be wound in a clockwise direction. The next loop back in the same lane shall be wound in a counter-clockwise direction. The next loop back in the same lane shall be wound in a counter-clockwise direction and so on. The loop detector in lane 2 closest to the limit line, shall be wound in a counter-clockwise direction.

Loop wires shall be labeled in the following manner:

Lane 1 - black Right turn Lane - orange

Lane 2 - red
Lane 3 - blue
Lane 4 - white
Lane 5 - yellow

1. Labels shall consist of banded colored tape visible in the pull boxes, where the loop wire is spliced to the detector lead-in cable.

2. Loop detectors shall be clearly marked to reference their location in relation to the limit line and lane. The loop closest to the crosswalk in the left most lane shall be labeled as loop number 1-1. The second loop in the same lane shall be labeled 1-2, and so on. Refer to drawing number TS-5 for further details.

3. The start and end leads of a loop detector shall be clearly marked by a means of plastic tie wrap labels.

Loop Home Run slots shall be double cut to accommodate the twisted pair (3-turns/foot), or as directed by the Engineer.

All wires for each detector loop shall terminate in the nearest pull box, not the hand hole.

Lead-in cables shall not be spliced between the termination point (the Pull box adjacent to loop detectors) and the controller cabinet terminals.

Attention is directed to the provisions in Section "Testing," of these Special Provisions and these special provisions. During loop installation, the Contractor shall (in the presence of the Inspector) perform a high resistance test and an inductive reactance test. The Contractor shall notify the Engineer at least 48 hours prior to loop installation.

10-3.22 EMERGENCY VEHICLE DETECTOR SYSTEM

Each traffic signal shall have an emergency vehicle detector system which shall conform to the details shown on the plans and these special provisions.

The equipment shall be 3M™ Opticom™ Priority Control System, 700 Series, or approved equals. If approved equals are substituted, the equipment shall be 100% compatible (to include vehicle classification coding) with the County's Fire Districts' and California Division of Forestry existing Opticom system. The "3M Opticom", Emergency Vehicle Preemption System is the current standard used by the fire protection agencies in the County of Placer.

GENERAL

Each emergency vehicle detector system shall consist of an optical emitter assembly or assemblies located on the appropriate vehicle and an optical detector/discriminator assembly or assemblies located at the traffic signal.

Emitter assemblies are not required for this project except units for testing purposes to demonstrate that the systems perform as specified. Tests shall be conducted in the presence of the Engineer as described below under "System Operation" during the signal test period. The Engineer shall be given a minimum of 2 working days notice prior to performing the tests.

Each system shall permit detection of 2 classes of authorized vehicles. Class I (mass transit) vehicles shall be detected at ranges of up to 1,000 feet from the optical detector. Class II (emergency) vehicles shall be detected at ranges up to 1,800 feet from the optical detector.

Class I signals (those emitted by Class I vehicles) shall be distinguished from Class II signals (those emitted by Class II vehicles) on the basis of the modulation frequency of the light from the respective emitter. The modulation frequency for Class I signal emitters shall be 9.639 Hz ±0.110 Hz. The modulation frequency for Class II signal emitters shall be 14.035 Hz ±0.250 Hz.

A system shall establish a priority of Class II vehicle signals over Class I vehicle signals and shall conform to the requirements in Section 25352 of the California Vehicle Code.

EMITTER ASSEMBLY

Each emitter assembly, provided for testing purposes, shall consist of an emitter unit, an emitter control unit, and connecting cables.

General

Each emitter assembly, including lamp, shall operate over an ambient temperature range of -34°C to +60°C at both modulation frequencies and operate continuously at the higher frequency for a minimum of 3,000 hours at 25°C ambient before failure of the lamp or other components.

Each emitter unit shall be controlled by a single, maintained-contact switch on the respective emitter control unit. The switch shall be located to be readily accessible to the vehicle driver. The control unit shall contain a pilot light to indicate that the emitter power circuit is energized and shall generate only one modulating code, either that for Class I vehicles or that for Class II vehicles.

Functional

Each emitter unit shall transmit optical energy in one direction only.

The signal from each Class I signal emitter unit shall be detectable at a distance of 1,000 feet when used with a standard optical detection/discriminator assembly and filter to eliminate visible light. Visible light shall be considered eliminated when the output of the emitter unit with the filter is less than an average of 0.0003-candela per energy pulse in the wavelength range of 380 nm to 750 nm when measured at a distance of 10 feet. A Certificate of Compliance, conforming to the requirements in Section 6-1.07, "Certificates of Compliance," of the Standard Specifications shall be submitted to the Engineer with each Class I emitter unit.

The signal from each Class II signal emitter unit shall be detectable at a distance of 1,800 feet when used with a standard optical detection/discriminator assembly.

The standard optical detection/discriminator assembly to be used in making the range tests shall be available from the manufacturer of the system. A certified performance report shall be furnished with each assembly.

Electrical

Each emitter assembly shall provide full light output with input voltages of between 12.5 V (dc) and 17.5 V (dc). An emitter assembly shall not be damaged by input voltages up to 7.5 V (dc) above supply voltage. The emitter assembly shall not generate voltage transients, on the input supply, which exceed the supply voltage by more than 4 volts.

Each emitter assembly shall consume not more than 100 W at 17.5 V (dc) and shall have a power input circuit breaker rated at 10 A to 12 A, 12 V (dc).

The design and circuitry of each emitter shall permit its use on vehicles with either negative or positive ground without disassembling or rewiring of the unit.

Mechanical

Each emitter unit shall be housed in a weatherproof corrosion-resistant housing. The housing shall be provided with facilities to permit mounting on various types of vehicles and shall have provision for aligning the emitter unit properly and for locking the emitter unit into this alignment.

Each emitter control unit shall be provided with hardware to permit the unit to be mounted in or on an emergency vehicle or mass transit vehicle. Where required for certain emergency vehicles, the emitter control unit and exposed controls shall be weatherproof.

OPTICAL DETECTION/DISCRIMINATOR ASSEMBLY

General

Each optical detection/discriminator assembly shall consist of one or more optical detectors, connecting cable and a discriminator module.

Each assembly, when used with standard emitters, shall have a range of at least 1,000 feet for Class I signals and 1,800 feet for Class II signals. Standard emitters for both classes of signals shall be available from the manufacturer of the system. Range measurements shall be taken with all range adjustments on the discriminator module set to "maximum".

Optical Detector

Each optical detector shall be a waterproof unit capable of receiving optical energy from two separately aimable directions. The horizontal angle between the 2 directions shall be variable from 180 degrees to 5 degrees.

The reception angle for each photocell assembly shall be a maximum of 8 degrees in all directions about the aiming axis of the assembly. Measurements of reception angle will be taken at a range of 1,000 feet for a Type I emitter and at a range of 1,800 feet for a Type II emitter.

Internal circuitry shall be solid state and electrical power shall be provided by the associated discriminator module.

Each optical detector shall be contained in a housing, which shall include 2 rotatable photocell assemblies, an electronic assembly and a base. The base shall have an opening to permit mounting on a mast arm or a vertical pipe nipple, or suspension from a span wire. The mounting opening shall have female threads for 3/4 inch conduit. A cable entrance shall be provided which shall have male threads and gasketing to permit a waterproof cable connection. Each detector shall have weight of less than 2.5 pounds and shall present a maximum wind load area of 36 square inches. The housing shall be provided with weep holes to permit drainage of condensed moisture.

Each optical detector shall be installed, wired and aimed as specified by the manufacturer.

Cable

Optical detector cable (EV-C) shall meet the requirements of IPCEA-S-61-402/NEMA WC 5, Section 7.4, 600-V (ac) control cable, 75°C, Type B, and the following:

A. The cable shall contain 3 conductors, each of which shall be No. 20 (7 x 28) stranded, tinned copper with low-density polyethylene insulation. Minimum average insulation thickness shall be 25 mils. Insulation of individual conductors shall be color coded: 1-yellow, 1-blue, 1-orange.
B. The shield shall be either tinned copper braid or aluminized polyester film with a nominal 20 percent overlap. Where film is used, a No. 20 (7 x 28) stranded, tinned, bare drain wire shall be placed between the insulated conductors and the shield and in contact with the conductive surface of the shield.
C. The jacket shall be black polyvinyl chloride with minimum ratings of 600 V (ac) and 80°C and a minimum average thickness of 43 mils. The jacket shall be marked as required by IPCEA/NEMA.
D. The finished outside diameter of the cable shall not exceed 0.35-inch.
E. The capacitance, as measured between any conductor and the other conductors and the shield, shall not exceed 48 pf per foot at 1000 Hz.
F. The cable run between each detector and the controller cabinet shall be continuous without splices or shall be spliced only as directed by the detector manufacturer.

Discriminator Module

Each discriminator module shall be designed to be compatible and usable with a Model 170 controller unit and to be mounted in the input file of a Model 332 or Model 336 controller cabinet, and shall conform to the requirements of Chapter I of the State of California, Department of Transportation, "Traffic Signal Control Equipment Specifications."

Each discriminator module shall be capable of operating 2 channels, each of which shall provide an independent output for each separate input.

Each discriminator module, when used with its associated detectors, shall perform the following:

A. Receive Class I signals at a range of up to 1,000 feet and Class II signals at a range of up to 1,800 feet.
B. Decode the signals, on the basis of frequency, at 9.639 Hz ± 0.119 Hz for Class I signals and 14.035 Hz ± 0.255 Hz for Class II signals.
C. Establish the validity of received signals on the basis of frequency and length of time received. A signal shall be considered valid only when received for more than 0.50-second. No combination of Class I signals shall be recognized as a Class II signal regardless of the number of signals being received, up to a maximum of 10 signals. Once a valid signal has been recognized, the effect shall be held by the module in the event of temporary loss of the signal for a period adjustable from 4.5 seconds to 11 seconds in at least 2 steps at 5 seconds ± 0.5 second and 10 seconds ± 0.5 second.
D. Provide an output for each channel that will result in a "low" or grounded condition of the appropriate input of a Model 170 controller unit. For Class I signals the output shall be a 6.25 Hz ± 0.1 percent, rectangular waveform with a 50 percent duty cycle. For Class II signals the output shall be steady.

Each discriminator module shall receive electric power from the controller cabinet at either 24 V (dc) or 120 V (ac).

Each channel together with the channel's associated detectors shall draw not more than 100 mA at 24 V (dc) or more than 100 mA at 120 V (ac). Electric power, one detector input for each channel and one output for each channel shall terminate at the printed circuit board edge connector pins listed below:

BOARD EDGE CONNECTOR PIN ASSIGNMENT

A	DC ground		
B	+24 V (dc)	P	(NC)
C	(NC)		
D	Detector input, Channel A	R	(NC)
E	+24V (dc) to detectors	S	(NC)
F	Channel A output (C)	T	(NC)
		U	(NC)
H	Channel A output (E)	V	(NC)
J	Detector input, Channel B	W	Channel B Output (C)
K	DC Ground to detectors	X	Channel B Output (E)
L	Chassis ground	Y	(NC)
M	AC-	Z	(NC)
N	AC+		

(C) Collector, Slotted for Keying
(E) Emitter, Slotted for Keying
(NC) Not connected, cannot be used by manufacturer for any purpose.

Two auxiliary inputs for each channel shall enter each module through the front panel connector. Pin assignment for the connector shall be as follows:

A. Auxiliary detector 1 input, Channel A
B. Auxiliary detector 2 input, Channel A
C Auxiliary detector 1 input, Channel B
D. Auxiliary detector 2 input, Channel B

Each channel output shall be an optically isolated NPN open collector transistor capable of sinking 50 mA at 30 V (ac) and shall be compatible with the Model 170 controller unit inputs.

Each discriminator module shall be provided with means of preventing transients received by the detector from affecting the Model 170 controller assembly.

Each discriminator module shall have a single connector board and shall occupy one slot width of the input file. The front panel of each module shall have a handle to facilitate withdrawal and the following controls and indicators for each channel:

A. Three separate range adjustments each for both Class I and Class II signals.
B. A 3-position, center-off, momentary contact switch, one position (down) labeled for test operation of Class I signals, and one position (up) labeled for test operation of Class II signals.
C. A "signal" indication and a "call" indication each for Class I and for Class II signals. The "signal" indication denotes that a signal above the threshold level has been received. A "call" indication denotes that a steady, validly coded signal has been received. These 2

indications may be accomplished with a single indication lamp; "signal" being denoted by a flashing indication and "call" with a steady indication.

In addition, the front panel shall be provided with a single circular, bayonet-captured, multi-pin connector for 2 auxiliary detector inputs for each channel. Connector shall be a mechanical configuration conforming to the requirements in Military Specification MIL-C-26482 with 10-4 insert arrangement, such as Burndy Trim Trio Bantamate Series, consisting of the following:

A. Wall mounting receptacle, G0B10-4PNE with SM20M-1S6 gold plated pins.
B. Plug, G6L10-4SNE with SC20M-1S6 gold plated sockets, cable clamp and strain relief that shall provide for a right angle turn within 2-1/2 inches maximum from the front panel surface of the discriminator module.

Cabinet Wiring

The Model 332 cabinet has provisions for connections between the optical detectors, the discriminator module and the Model 170 controller unit.

Wiring for a Model 332 cabinet shall conform to the following:

A. Slots 12 and 13 of input file "J" have each been wired to accept a 2-channel module.
B. Field wiring for the primary detectors, except 24-V (dc) power, shall terminate on either terminal board TB-9 in the controller cabinet or on the rear of input file "J," depending on cabinet configuration. Where TB-9 is used, position assignments shall be as follows:

Position	Assignment
4	Channel A detector input, 1st module (Slot J-12)
5	Channel B detector input, 1st module (Slot J-12)
7	Channel A detector input, 2nd module (Slot J-13)
8	Channel B detector input, 2nd module (Slot J-13)

The 24-V (dc) cabinet power will be available at Position 1 of terminal board TB-1 in the controller cabinet.

Field wiring for the auxiliary detectors shall terminate on terminal board TB-O in the controller cabinet. Position assignments are as follows:

FOR MODULE 1 (J-12)		FOR MODULE 2 (J-13)	
Position	Assignment	Position	Assignment
1	+24V (dc) from (J-12E)	7	+24V (dc) from (J-13E)
2	Detector ground From (J-12K)	8	Detector ground from (J-13K)
3	Channel A auxiliary detector input 1	9	Channel A auxiliary detector input 1
4	Channel A auxiliary detector input 2	10	Channel A auxiliary detector input 2
5	Channel B auxiliary detector input 1	11	Channel B auxiliary detector input 1
6	Channel B auxiliary detector input 2	12	Channel B auxiliary detector input 2

SYSTEM OPERATION

The Contractor shall demonstrate that the components of each system are compatible and will perform satisfactorily as a system. Satisfactory performance shall be determined using the following test procedure during the functional test period:

A. Each system to be used for testing shall consist of an optical emitter assembly, an optical detector, an optical detector cable and a discriminator module.
B. The discriminator modules shall be installed in the proper input file slot of the Model 170 controller assembly.
C. Two tests shall be conducted; one using a Class I signal emitter and a distance of 1,000 feet between the emitter and the detector, the other using a Class II signal emitter and a distance of 1,800 feet between the emitter and the detector. Range adjustments on the module shall be set to "Maximum" for each test.
D. Each test shall be conducted for a period of one hour, during which the emitter shall be operated for 30 cycles, each consisting of a one minute "on" interval and a one minute "off" interval. During the total test period the emitter signal shall cause the proper response from the Model 170 controller unit during each "on" interval and there shall be no improper operation of either the Model 170 controller unit or the monitor during each "off" interval.

Preemption cables shall be labeled in the following manner:

Phase 2 & 5	single gray band
Phase 4 & 7	double gray band
Phase 1 & 6	triple gray band
Phase 3 & 8	quadruple gray band

Labels shall consist of banded colored tape visible at the preemption detector, signal standard hand hole, adjacent pull box and the Controller Cabinet. Cables in the Controller Cabinet shall have tie wrap labels with appropriate phasing descriptions.

10-3.23 PEDESTRIAN PUSH BUTTONS

Pedestrian push button assemblies shall be aluminum Type "B" with metal international symbol signs.

Pedestrian push buttons shall be Polara “Bulldog” with LED indicators and beeper or approved equal.

Push buttons shall meet all Americans with Disabilities Act guidelines and be placed between 36 to 40 inches above the grade of the closest edge of sidewalk or ramp landing, and require a horizontal reach of no more than 18 inches outside the closest edge of sidewalk.

Pedestrian push buttons shall be within five (5) feet from the edge of the access ramp pan.

10-3.24 LUMINAIRES

Unless otherwise noted, all luminaries shall be HPS:

1. Medium, cutoff, III lighting distribution (MSIII).
2. Multi-voltage ballast (120/208/240/277) with lag-type magnetic regulator

3. Power door ballast assembly and plug in starter
4. Photo eye receptacle with shorting cap
5. Flat glass lens
6. Polyester fiber gasket breathing seal
7. Voltage tap connection

10-3.25 PHOTOELECTRIC CONTROLS

The contractor shall furnish and install a Type V photoelectric control and a mercury dispalacement type contactor in the Type III-AF Service Equipment enclosure.

10-3.26 REMOVING, REINSTALLING OR SALVAGING ELECTRICAL EQUIPMENT

Salvaged electrical materials shall be hauled to Placer County Road Maintenance Office at 11428 F Avenue, Auburn, CA 95603 and stockpiled.

The Contractor shall provide the equipment, as necessary, to safely unload and stockpile the material. A minimum of 2 working days' notice shall be given prior to delivery.

10-3.27 PAYMENT

The contract lump sum price paid for signal and lighting shall include lighting in connection with signals only.

Full compensation for hauling and stockpiling electrical materials shall be considered as included in the contract price paid for the item requiring the material to be salvaged and no additional compensation will be allowed therefor.

The contract lump sum price paid for emergency vehicle detector system shall include full compensation for furnishing all labor, materials, tools, equipment, and incidentals, and for doing all the work involved in installing emergency vehicle detector system, complete in place, as shown on the plans, as specified in the Standard Specifications and these special provisions,and as directed by the Engineer.

SECTION 10-4. WATER DISTRIBUTION SYSTEM

10-4.01 GENERAL

This section covers materials and installation of the water transmission pipeline that is being installed for San Juan Water District (SJWD) under this Contract.

The Contractor shall provide all materials, equipment and labor as required to construct the Work identified in this section and shown on the Drawings, complete and to the satisfaction of the SJWD Construction Inspector and the SJWD Engineer.

SJWD has not conducted any subsurface investigation, and has made no representation of what subsurface condition exists. The Contractor may encounter groundwater and/or rock with this project and is expected to plan accordingly for these types of field conditions and have adequate backfill materials, and dewatering and heavy excavation equipment on hand to prepare and keep the trench acceptable for pipe laying.

Basic requirements for materials, methods of installation, tests, and other items related to the potable water system pipelines are specified herein and in the San Juan Water District (SJWD) Standard Details which are available from SJWD. Additional requirements may also be found in the Encroachment Permit and other permits issued for this specific Project, and also are described in SJWD's General Water Notes and the General Notes on the Drawings.

All potable water pipeline facilities materials to be installed are to be new materials from reputable suppliers. All pipeline material is to be approved prior to installation by SJWD.

Project requirements described in the foregoing documents are not necessarily repeated herein. In case of conflict between documents, Contractor shall bring said conflict to the attention of the SJWD Construction Inspector, and SJWD reserves the right to make the final determination on the resolution.

10-4.02 SUBMITTALS AND SUBSTITUTIONS

All materials shall be approved by SJWD prior to procurement, delivery and installation. Submit at Contractor's expense, in duplicate sets, the following items ("submittals") at a minimum:

a. Construction Schedule, including the specific scheduling of the pipeline construction.
b. Shop drawings, product data, and sample submittals for all of the materials to be used to construction the potable water pipeline facilities.
c. Materials data sheets, including those for backfill materials.
d. Concrete mix designs.
e. Safety Plans, including any trenching and shoring plans.
f. Copies of permits, including compliance with the State General Construction Activity Storm Water NPDES Permit.
g. Approved Storm Water Pollution Prevention Plan (SWPPP).
h. Installation, Operation, and Maintenance Manuals.

i. Project record documents including photographs, testing reports, and as-constructed (as-built) drawings.

SJWD will consider substitution requests only from the Contractor and only when the specified product becomes unavailable. Requests for substitution shall state the extent, if any, to which the evaluation and acceptance of the substitution will affect the Contractors schedule and completion time, and whether or not acceptance of the substitute for us in the Work will require a change in design or in any of the Contract Documents, and if the substitution will affect the warranty. Requests for substitution shall include all necessary manufacturers' information to allow effective evaluation by SJWD of the substitution.

Neither SJWD's review of, nor comments on, any of the submittals shall constitute a representation of warranty as to compliance with any legal requirements. SJWD reserves the right to reject all or portions of a submittal as inadequate to protect health, safety or final construction outcome. Contractor shall promptly update and re-submit any submittal or safety plan as conditions change at no additional cost.

10-4.03 CONSTRUCTION OBSERVATION

SJWD shall provide a Construction Inspector, employed by SJWD, to observe construction of the potable water pipeline facilities, including the initial backfill, and to observe and approve the testing of the pipeline facilities installation.

Contractor shall keep the SJWD Construction Inspector informed, a reasonable time in advance, of the times and places at which it intends to perform work, such that any checking or observation deemed necessary by SJWD can be done with a minimum inconvenience to SJWD and minimum delay to Contractor.

10-4.04 DUCTILE IRON PRESSURE PIPE AND FITTINGS

Ductile iron pipe for buried service shall conform to the requirements of AWWA Standards C115, C150, and C151 with cement mortar lining per AWWA C104, bituminous coating per AWWA C151, and be polyethylene encased per AWWA C105. For exposed, above grade service the coating shall instead be fusion-bonded epoxy or manufacturer-applied epoxy

Fittings shall be ductile iron conforming to AWWA C110 and C115. Flanges shall be drilled and faced per ANSI B16.1 for both 125 and 250 psi applications. Fittings for buried service shall be provided with cement mortar lining per AWWA C104, bituminous coating per AWWA C151, and be polyethylene encased per AWWA C105. Compact style fittings conforming to AWWA C153 may be allowed under some cases with SJWD's pre-approval.

Rubber-gasket joints for ductile iron pressure pipe and fittings shall conform to AWWA C111.

Fasteners for buried service shall be cadmium plated meeting Military Specification QQ-P-416F, Type 1, Class 2 (Cor-Ten), and for exposed service shall be mechanically galvanized ASTM B695, Class 40. Heads and dimensions shall be per ANSI B16.1 and threaded per ANSI B1.1. Project ends of bolts 1/4- to 1/2-inch beyond nuts.

Mechanical restraint of pipe joints shall be allowed where indicated on the Drawings or when approved by the SJWD Engineer. Mechanically restrained materials shall be pre-approved as to location and material, using US Pipe TR-Flex, EBAA Iron, or approved equal.

Couplings shall be long-body or long-sleeve type; Romac Style 501, Smith-Blair Series 442, or approved equal.

10-4.05 PVC PRESSURE PIPE

When allowed, Poly Vinyl Chloride (PVC) distribution pipe, 4-inch through 12-inch diameter, shall be AWWA C900, rubber-ring gasket bell end or plain end with elastomeric gasket coupling, Class 150 (DR 18) or Class 200 (DR 14) as shown on the Drawings, ductile iron equivalent OD, material cell classification 12454-B per ASTM D 1784. Fittings shall conform to AWWA C110 with a minimum pressure rating of 250 psig. Size bell specifically for OD of ductile iron equivalent PVC pipe including rubber-ring retaining groove.

10-4.06 VALVES

All valves shall open in the counter-clockwise direction. Valves 3-inches and larger shall be equipped with standard 2" nuts unless otherwise shown on the Drawings. Valves shall have non-rising stems. Bolts and nuts shall be rust-proofed with cadmium plating conforming to ASTM A165, grade NS, or zinc coating to ASTM 153 or 164, type G.S. Valves 3-inches and larger shall be coated with a minimum 10 mils of a fusion applied epoxy coating (3M Scotchcoat 203 or SJWD approved equal). Valves for exposed service shall also have a suitable and compatible polyurethane topcoat for UV protection per the coating manufacturer's recommendation.

Type B and C bronze as defined by AWWA shall not be used in contact with potable water.

The manufacturer shall supply catalog data including illustrations, operations and maintenance information, assembly drawings, and a part schedule that clearly identifies the types of materials used. This information shall be in sufficient detail to serve as a guide for assembly and disassembly, and for ordering parts.

Butterfly valves shall be used in pipelines greater than ten (10) inches in diameter. Gate valves shall be used in pipelines up to and including ten (10) inches in diameter.

Gate Valves

Gate valves two (2) inches and larger shall be resilient seated conforming to AWWA Standard C509 with end connections as shown on the drawings. Acceptable manufacturers are:

a. Mueller Company
b. American Darling Valve
c. Kennedy Valve
d. Or SJWD approved equal.

Butterfly Valves

Butterfly valves shall be rubber seated conforming to AWWA Standard C504 with short body, class 150B, stainless steel seating edge. Minimum working differential pressure across the valve disc shall be 150 psig. Flanged ends shall be Class 125, ANSI B16.1. Valve shafts shall be Type 304 or 316 stainless steel. Shafts shall be stub shaft or one-piece units extending completely through the valve disc. The valve seat shall be secured to or retained in the valve body. Materials of construction shall be as follows:

a. Body – Cast iron or ductile iron, ASTM A 48, Class 40; ASTM A 126, Class B; or ASTM A 536, Grade 65-45-12.
b. Exposed Bolts, nuts and capscrews – Stainless Steel, ASTM A 274 Type 304 or 316
c. Discs – Cast iron, ductile iron or Ni-resist, ASTM A 48, Class 40; ASTM A 536, Grade 65-45-12; ASTM A 436, Type 1; or ASTM A 126, Class B
d. Disc Fasteners, Seat Retention Segments, and Seat Fastening Devices – Shall be stainless steel ASTM A 276, Type 304 or 316

Butterfly valves for the project will be provided all by the same manufacturer. Acceptable manufacturers are:

a. Henry Pratt Company
b. Kennedy Valve
c. Or SJWD approved equal

10-4.07 AIR VACUUM RELIEF VALVES

The air vacuum release valve body and cover shall be constructed of cast or ductile iron. Each valve shall be equipped with ASTM 240 stainless steel float and mechanism, and unless otherwise indicated on the Drawings, shall be a 5/16 orifice for venting air when system is pressurized. The entire valve assembly shall have a minimum pressure rating of 150 psig. Acceptable manufacturers are

a. APCO (Valve and Primer Company), #143-C
b. Val-Matic (Valve and Manufacturing Corporation)
c. Crispin (Multiplex Manufacturing)
d. Golden-Anderson
e. or approved equal.

10-4.08 WATER METERS

Water meters shall be 1-inch in size, unless otherwise indicated on the drawings, and shall be Sensus TR/PL (Touch Read Meter). 1-inch meters (meters only, not the ancillary installation materials) shall be provided by SJWD, all other meter sizes shall be provided by Contractor. Water service piping, described as that service pipe from the water main to the meter, shall be High Density Polyethylene Pipe (HDPE) 1-inch through 2-inches in diameter and shall conform to AWWA C901. 1-inch service pipe shall have a nominal IPS (iron pipe size) OD. 1-1/2-inch and 2-inch service pipe shall have a nominal CTS (copper tube size) OD. All HDPE pipe shall have a minimum hydrostatic design basis (HDB) of 1,600 psi, as determined in accordance with ASTM D 2837.

10-4.09 BLOWOFFS

Blow-offs shall be constructed per SJWD Detail Sheet 9.

10-4.10 HYDRANTS

Fire hydrants shall be of the wet barrel design and shall comply with AWWA C503. Hydrants shall be furnished with two layers of factory-applied white coatings for public locations; and yellow coating color for private locations. Coatings shall be polyurethane epoxy, or epoxy base coat with acrylic top coat. Provide hydrant head, barrel, bury section, and lateral to main including tee and gate valve. Barrel connecting flange shall be drilled to the dimensions of the ANSI B16.1, Class 125, flat face. The head and barrel shall be bronze per AWWA C503. Provide two 2-1/2 inch and one 4-1/2 inch nozzles with cap and chain on each nozzle.

Hydrants shall be Clow 960, with break-off check valve and spool.

10-4.11 CORROSION CONTROL

Corrosion control shall include all of the materials, equipment, and labor to provide and install the corrosion monitoring system and cathodic protection system components, including trenching and other excavation, bonding of cables and other installation requirements, operational system testing, correction of all deficiencies, and clean-up and restoration of the surfaces in improved areas.

Installation shall be in accordance with applicable AWWA, ASTM and NACE standards, and per the Drawings and these specifications.

Prior to beginning work, receive approval from SJWD for a complete list of equipment and material, including name and manufacturer, catalog number, size, and any other pertinent data necessary for proper identification and to determine conformance with specifications, and also provide the appropriate shop drawings, reports and any necessary permits.

The following materials shall be included:

a. Anodes – High potential magnesium having the following chemical composition; aluminum 0.010%, manganese 0.50% to 1.30%, copper 0.02 % max, nickel 0.001% max, iron 0.03% max, other 0.05 each or 0.3% max total, and magnesium as the remainder. Anodes shall be factory assembled with a 75% gypsum, 20% bentonite, and 5% sodium sulfate backfill in a water permeable cloth sack. A factory installed lead will shall be provided in the length and gage (min. 12 ga.) required such to allow installation without splicing. Anodes shall be installed horizontally or vertically at a minimum horizontal distance of 2 FT from the project pipeline, at the top or bottom of the pipe, as indicated. Anodes shall not be carried, suspended, or lowered by means of anode lead wires. Damaged anodes shall be replaced by the Contractor at his sole expense. Protective plastic or paper covering shall be removed before anodes are installed. Anodes shall be installed in native soil and shall be backfilled with native soil free of rocks, clods, vegetation and debris of any type. Anodes shall be backfilled with 6 IN lifts of native soil, each lift compacted sufficiently and tightly, taking care to cause no punctures or

damage to cloth bag, anode backfill material, anode lead wire or the anode itself. When the backfill is even with the top of the anode, the anode locations shall be saturated by adding minimum 10 gallons of fresh water for each anode. At locations where higher resistivity backfill is used, the immediate area around the anode shall be backfilled with native soil for a minimum of 12 inches. Multiple anode wires shall be connected to the same anode terminal. The terminal shall be sized to accommodate the number anodes at that location. Anode lead wires shall be of sufficient length to provide a minimum slack of 18 IN at anode and test station installations to avoid stress during backfilling and pipe settlement. Care must be taken to ensure that no damage occurs to wires and insulation during installation.

b. Permanent Reference Electrode – Packaged copper/copper sulfate reference electrode, 99.99 % pure copper electrode and a super saturated copper sulfate solution, housed in a 2-in diameter PVC tube, with #14 AWG/HMWPE cable. The cable length is required such to allow installation without splicing. Packaged permanent reference electrodes shall be installed as indicated at approximately 12 IN from the pipe wall at the bottom depth of the pipeline, and minimum 5 FT from any anodes. Plastic storage bags from the reference electrode shall be removed immediately prior to installation. Reference electrodes shall be backfilled with native soil only and shall be covered on all sides with 6 IN minimum soil. When the backfill is even with the top of electrode, 10 gallons of fresh water shall be added to saturate the area. After the water is added, 6 IN minimum of native soil shall be placed over the electrode and compacted to eliminate voids. Care shall be taken to prevent damage to wire insulation. The electrode shall not be suspended by the lead wire at any time during the installation. Damage to the wire insulation will result in rejection of the electrode. At locations where higher resistivity backfill is used, the immediate area around the reference electrode shall be backfilled with native soil for a minimum of 6 IN.

c. Flush-to-grade Test Station Boxes – Concrete H-20 traffic rated with cast iron lid marked "CP-TEST". The box shall be 10-3/8 IN inside diameter and 12 IN high. Terminal board to be installed within test station boxes shall be, minimum 5" x 5", made of micarta or phenolic panel with sufficient number of terminals and shunts, and installed in the locations as indicated or as directed by the SJWD Construction Inspector. Install test stations at locations as indicated. Locations of test stations are approximate and may be adjusted to suit field conditions after approval from the SJWD. Terminate and label all wires in test stations as indicated. Test lead wires shall be of sufficient length to provide a minimum slack of 18 IN at the pipe to avoid stress during backfilling and pipe settlement. A minimum lead wire slack of 18 IN shall be also provided in the flush-to grade test station to facilitate removal of terminal board for testing. Install reference electrodes at specific locations marked "X" in the test station schedule, as indicated.

d. Post Mounted Test Station Boxes – Test station boxes in unpaved areas shall be post-mounted type made of polycarbonate material, blue color, with sufficient number of nickel-plated brass terminals and shunts. Install the test stations at unpaved locations. The test station box shall be mounted on a 3-inch diameter PVC schedule 40 pipe post and shall be anchored in concrete to prevent settling. Test stations shall be installed in the locations as indicated or as directed by the SJWD Construction Inspector.

e. Shunts – Shunts used in test stations shall be 0.01 ohm, 6 or 8 ampere capacity.

f. Anode and Test Lead Cables – Provide in the size (gauge), type, and color insulation as indicated on the Drawings. Length shall be as required to be installed without splicing. All cathodic protection cables buried in the ground shall be laid straight, without kinks and routed to the test station. All buried cables shall have plastic warning tape installed a minimum of 12 IN above the top of the cables. Each cable run shall be continuous in length and free of joints or splices. Care shall be exercised during installation to avoid punctures, cuts, and similar damage to insulation. Any damage to insulation will require replacement of the entire cable length. Backfill surrounding the cable shall be native soil free of foreign materials. Label all cables inside test stations using pre-printed heat shrink plastic identification tags.

g. Dielectric Isolation Flange Kits – Isolating flange kits shall include full-faced gaskets, isolating sleeves and washers, and steel washers, as manufactured by PSI, Central Plastics or approved equal. The complete assembly shall have a pressure rating equal to that of the flanges between which it is installed. Gasket shall be neoprene-faced phenolic, 3.18 mm (1/8 IN) thick having a high dielectric constant of 200 volts/mil or greater. Isolating sleeves shall be phenolic, 0.8 mm (1/32 IN) thick. Isolating washers shall be 3.18 mm (1/8 IN) thick phenolic, having a high dielectric constant. Steel washers shall fit well within the bolt facing on the flange. Isolating washers shall fit within the bolt facing the flange over the outside diameter of the sleeve. All existing and aboveground metallic pipelines shall be electrically isolated from the new underground metallic piping. At concrete penetrations reinforcing steel must be electrically isolated from steel pipe by providing non-metallic Link Seal or Approved Equal. Do not install dielectric isolating washers at the cathodically protected pipeline side of the flange. At valves where bolts thread into the valve body, install isolating washers on the project pipeline side of the flange. Provide a test station at each buried isolating flange location.

h. Bond Cables – The wires for pipe joint bond cables shall be #2 AWG HMWPE, Type ASTM D-1248, stranded cable, 18 IN long or as indicated in the Drawings. Exothermic weld connections for ductile iron pipe shall be installed in the manner and at the locations shown on the plans. Two bond cables at a minimum shall be installed at each joint. Coating materials shall be removed from the surface over an area just sufficient to make the connection. The pipe surface shall be cleaned to white metal by grinding or filing prior to welding the conductor. Resin impregnated grinding wheels will not be allowed. Exothermic welds shall be tested by the Contractor for adherence to the pipe and for electrical continuity between the pipe and wires. A 22-ounce hammer shall be used for testing adherence by striking a sharp vertical blow to the weld. Care shall be taken to avoid hitting the wires. After successfully passing the adherence test, welding slag shall be removed from the weld by tapping the weld with a geologist's hammer or other device capable of delivering a controlled impact to a precise location. Slag will be visible as black or porous metal, and will frequently be loosened by the adherence test. After welding and slag removal, coat all welds with weld cover coating as directed.

i. Warning Tape – All buried cables shall have plastic warning tape installed a minimum of 12 IN above the top of the cables. The warning tape shall be minimum 3 IN wide and shall be yellow with black lettering with legend, "CAUTION, CATHODIC PROTECTION CABLES BURIED BELOW."

j. Petrolatum Wax Tape – Petrolatum wax tape and primer used for coating underground dielectric isolating flange pipe joints shall comply with AWWA C217. The tape shall consist of two layers as follows:

   1. First Layer: Plastic fiber felt saturated with petrolatums, plasticizers, and corrosion inhibitors.
   2. Second Layer: "Rock –shield" type material.

   All exposed surfaces of underground flange joints, including the outside of the flange gasket and exposed flange bolts, nuts and washers shall be coated with the specified primer and wax tape. Wax tape shall be applied in accordance with the tape manufacturer's instructions.

k. Exothermic Weld – All cable connections to ductile iron pipe and mortar coated steel pipe and fittings shall be accomplished utilizing an exothermic welding process such as "Cadweld" by Erico Products, Inc., "Thermoweld" by Continental Industries, Inc., or approved equal. Each cable shall be fitted with a copper sleeve for accomplishing the weld. Cartridge, sleeves and molds for each weld shall be furnished by the same manufacturer. All materials for welding shall be sized in accordance with recommendations in manufacturers' literature. A cover used for sealing cable to pipe exothermic weld connections shall be "Handicaps" by Royston Products, "Thermit" by Phillips Petroleum Co. or approved equal. Installation shall be in accordance with the manufacturer's recommendations and per the direction of SJWD.

l. Bitumastic – Bitumastic may be used in conjunction with an Exothermic Weld to recoat areas of the fitting not physically covered by the Exothermic Weld Covering. Bitumastic shall be Kop-Coat Bitumastic 300M or approved equal.

Installation of the corrosion control and monitoring materials shall be in accordance with the manufacturer's recommendations, these specifications, the Drawings, and per the direction of SJWD.

Corrosion Control System Testing Methods and Criteria

Contractor shall provide electrical check between metallic non-ferrous pipe or appurtenances and ferrous elements of construction to assure discontinuity has been maintained.

Wherever electrical contact is demonstrated by such test, locate the point or points of continuity and correct the condition.

After installation of the test stations, corrosion monitoring and cathodic protection facilities, the system shall be tested by personnel under the direct supervision of a NACE International certified Cathodic Protection Specialist or Registered Corrosion Engineer hired by the Contractor to ensure conformance with the specifications. A minimum of a 5-Day notice shall be given to SJWD prior to scheduling the testing of the systems. Any repair or re-testing of the system shall be at the Contractor's expense. Following completion of the corrosion monitoring and cathodic protection installations, but prior to final site restoration, submit the following items for approval by SJWD in accordance with the submittal procedures.

a. Test Report (within 30 days of completion of field testing) – Including effectiveness of dielectric isolating joints, pipeline electrical continuity, pipeline potential data, adequacy of test stations, reference electrodes, and conclusions.
b. Results of Operational Testing – In accordance with NACE RP0169-2002 to ensure proper installation and operation.

10-4.12 HANDILING, UNLOADING AND DISTRIBUTIN MATERIALS

Handle, deliver, store and protect products in accordance with the manufacturers' recommendations, and in a manner to allow inspection access. Contractor shall remain solely responsible for inspection, acceptance, handling, storage and installation of all pipeline materials.

During loading, transportation, and unloading, every precaution shall be taken to prevent injury to the pipe or pipe lining. No pipe shall be dropped from cars or trucks or allowed to roll down slopes or slides without proper retaining ropes. Each pipe shall rest on suitable pads, strips, skids, or blocks during transportation and installation and shall be securely wedged or tied in place. Padding shall be sued on car or truck stakes, skids, etc., to prevent damage to the pipe during transportation and handling. Any pipe damaged shall be replaced.

Each section of pipe shall be delivered in the field as near as practicable to the place where it is to be installed. Pipes shall be distributed along the side of the trench opposite to the spoil bank within easy reach of the installing crew. Where it is necessary to move the pipe longitudinally along the trench, it shall be done in such a manner as not to injure the pipe. Pipe shall not be rolled or dragged on the ground.

Where pipe is placed on stockpiles, it shall be neatly piled and blocked with strips between tiers.

10-4.13 LINES AND GRADES

The Contractor shall lay out all work, including structures and pipeline facilities, and shall be responsible for any errors resulting therefrom. In all questions arising as to proper location of lines and grades associated with the pipeline facilities, the SJWD Engineer's decision shall be final. Field changes and layout submittal changes must be approved in writing by the SJWD Engineer.

As part of the bid price for the construction of the improvements the Contractor shall provide and be responsible for the layout of all potable water pressure pipeline facilities on this project. The Contractor shall provide all necessary surveys, field staking, and positioning for the construction of all components at the proper alignment, elevations, grades, and positions, as indicated on the Drawings and as required for the proper operation and function. The Contractor is also responsible to stake the work limits.

The Contractor shall supply such labor as required, at no extra charge, to aid and assist the SJWD Construction Inspector in checking location and grades of the work as set by the

Contractor, if so requested by the SJWD Construction Inspector. This shall include moving materials and equipment located between monuments and the construction work.

10-4.14 WATER PIPELINE CONSTRUCTION (GENERAL)

Water pipeline construction shall be in accordance with AWWA Standards and SJWD standards and requirements. The SJWD Construction Inspector and/or SJWD authorized representative shall have authority to stop Work in the event that installation is not in accordance with standards and requirements.

Piping and fittings, etc., shall be cleaned of dirt and scale prior to installation and all joints swabbed clean before jointing. The ends of all pipes shall be closed or plugged at the end of each day's work and as otherwise necessary to prevent the entrance of foreign materials.

All pipework, fittings and appurtenances installation not specifically specified in these specifications shall be furnished as shown on the Drawings and shall be installed in accordance with the specifications for similar work.

Install water pipeline accurate to the line, elevations, location and grade shown on the Drawings. Water pipelines are to be staked at a minimum 100 FT interval with depth of cuts monitored.

Contractor shall furnish and install all necessary fittings for the satisfactory alignment and arrangement of piping. On curved alignments of piping, the maximum pull or deflection recommended by the pipe manufacturer for the given type and size of pipe shall not be exceeded. Provide fittings as necessary to meet this requirement.

Concrete thrust and gravity blocks (Class 2000 psi) shall be provided at all unrestrained bends and fittings in water mains. Thrust blocks shall be poured between the pipe or fitting and the undisturbed trench walls and shall be as shown on the SJWD Standard Details. Joints and face of plugs shall be kept clear of concrete unless noted otherwise on the Drawings.

Cutting of pipe as necessary for assembly, erection and completion of the Work shall be the responsibility of the Contractor. All cut pipe shall fit accurately with smooth edges and faces. The Contractor shall be responsible for any correctness of cutting and shall stand the loss for any materials which are injured or incorrectly cut.

Joints in pipes or fittings shall be made as follows:

a. Push-on Joints – Push-on joints shall be assembled in accordance with the manufacturer's recommendations for water pipelines and shall be watertight.
b. Flanged joints shall be made up square, with even pressure on the gaskets, and shall be watertight. All gaskets shall be the full width of the flanges to which they are applied.

Locating wire shall be installed with all pipe runs using No. 10 gauge insulated, soft drawn copper wire laid on top of the pipe to facilitate later pipe location. Wire shall be stubbed up

inside valve boxes and at other locations per the SJWD Standard Details and as field directed by the SJWD Construction Inspector.

Contractor shall field verify depth of utilities that will be crossed prior to beginning construction. If any conflicts are found Contractor shall immediately notify Engineer such that they can be quickly resolved. Contractor shall coordinate relocation of any existing utility with utility agency. Adjust water pipeline horizontal alignment and/or elevation as required during construction with written approval by Engineer and make such adjustment notations on the as-constructed drawing set.

No separate payment will be made for field verifications. No separate payment will be made for adjustment of main depths as required without prior written approval of the Engineer and SJWD.

Contractor will restore all existing structures or services damaged by Contractor's operations to equal or better condition, to the satisfaction of the Engineer, at no additional cost.

Interruption of service to water users shall be pre-scheduled and shall not exceed 4 HRS. SJWD will notify its customers of any pending, scheduled service disruption. Notify SJWD such that SJWD can notify property owners of any planned service interruption a minimum of 24 HRS in advance. Representatives of any utilities to be crossed shall be notified a minimum of 24 hours in advance of crossings.

Make connections to existing water mains as shown on the Drawings, by attaching to existing or changed fitting. Connections to existing SJWD transmission mains or distribution piping must be completed only after pre-approval of schedule by SJWD.

Contractor is responsible for dewatering and disposing of water in the trench at no additional cost.

10-4.15 SHORING SAFETY PLAN

At least five days in advance of excavating any trench five feet or more in depth, Contractor shall submit a detailed plan showing the shoring, bracing and sloping design and other provisions to be made for worker protection from the hazard of caving ground during the excavation, as required by Labor Code Section 6705. A civil or structural engineer registered in California shall prepare and sign any plan that varies from the shoring system standards established by the State Construction Safety Orders.

During the course of the Work, the Contractor shall be responsible for determining where sloping, shoring, and/or bracing is necessary and the adequacy of the design, installation and maintenance of all shoring and bracing for all excavation, including any excavation less than five feet in depth. Contractor will be solely responsible for any damage of injuries that may result for excavating or trenching. SJWD’s acceptance of any drawings showing the shoring or bracing design or work schedule shall not relieve Contractor of its responsibilities under this subsection/paragraph.

The Contractor shall comply with Labor Code 6500 and shall obtain, as applicable, a permit as required by Cal/OSHA for construction of trenches or excavations that are five feet or more in depth and into which a person is required to descend.

10-4.16 WATER PIPELINE TRENCH EXCAVATION

Trench excavation shall include, but not necessarily be limited to, the removal of all materials or obstructions of any nature, the installation and removal of all sheeting and bracing and the control of water, necessary to construct the Work as shown. Unless otherwise indicated o the drawings or permitted by the SJWD Engineer, excavation shall be by open cut. Trenching machines may be used, except where their use will result in damage to existing facilities. Trenches shall be excavated to provide for bedding hereafter specified.

Trench width shall be in accordance with SJWD Standard Detail Sheet 11.

When the trench is in an existing paved area, the pavement shall be sawed or scored and broken ahead of the trenching operations. The proper tools and equipment shall be used in marking and breaking so that the pavement will be cut accurately on neat and parallel lines. The width of pavement cut shall be sufficient to avoid further pavement breakage during trenching operations.

New and replacement paving, including subgrades shall be in accordance with the Encroachment Permit and/or as other wise indicated in the specifications or drawings for the project. There shall be no separate payment for paving unless otherwise provided for in the construction bid schedule for the project.

The maximum length of trench allowed to be left open at the end of the day, if any, shall be approved by the Engineer. Typically at the end of each working day, all trenching shall be backfilled, compacted and surfaced.

Whenever the bottom of the trench is soft, yielding, or in the opinion of the SJWD Engineer or SJWD Construction Inspector otherwise unsuitable as a foundation for the pipe, the unsuitable material shall be removed to a depth such that when replaced with approved engineered material will provide a stable and satisfactory foundation. If material more than 6-inches below the flow line of the pipe is ordered removed by the SJWD representative, the excavation below that point and the imported material required to backfill the trench to that elevation shall be paid for as extra work. Special compaction of the imported material may be required.

Disposal of excess excavated material, unsuitable or not required for backfill shall be the property of the Contractor and deposited in a location selected by the Contractor in compliance with County and State requirements. All cleared materials, excavated pipe and fittings, including asbestos cement pipe and fittings, concrete, and other materials shall be disposed of by the Contractor in compliance with County and State requirements at Contractor’s expense.

If the trench is over-excavated, the Contractor shall use bedding materials as specified herein to bring the trench bottom to the elevation required, compacted to a density of at least 90 percent relative compaction.

10-4.17 ROCK EXCAVATION AND BLASTING

Trench excavation for the water pipeline installation is expected to be diggable with standard mainline trenching equipment or with equipment suitable for rock excavation conditions. Blasting is not anticipated. The method used to determine the need for blasting shall be one of the following:

1. When the digging conditions exceed the published performance tating of a CAT 235 excavator with rock bucket or other SJWD approved piece of similar equipment. Said excavator shall meet the following minimum specifications and shall follow SAE rating:
   a. Stick Crowd Force of 43,400 lbs.
   b. Bucked Breakout Force of 42,800 lbs.
   c. Front Lift Capacity of 29,980 lbs.

2. When the digging conditions exceed the ability to trench and install 100 lineal feet of pipeline per day with the aid of a Rammer® S25-series hydraulic hammer or SJWD approved equivalent. Said hydraulic hammer shall meet the following specifications:
   a. Impact Rate of 600 – 1800 bpm
   b. Impact Energy of 458 lbs.
   c. Carrier Weight of 11,000 – 18,700 lbs.

The SJWD Engineer and the Contractor shall agree on any location on site where the above methods are unsuccessful and blasting is required. The Contractor shall obtain from the Resident Engineer the specific requirements concerning blasting.

The Contractor shall submit a Blasting Plan for approval prior to beginning any blasting.

Contractor is advised to review the geotechnical report for the project, and perform any necessary investigations including but not limited to potholing, prior to submitting their Bid.

Payment for actual quantities associated with blasting shall be on a unit price basis. The quantities of work performed will be computed by the SJWD Engineer on the basis of measurement taken by the SJWD Engineer or SJWD Construction Inspector, and these measurements shall be final and conclusive. All quantities of work computed shall be based on measurements according to United States Measurements and Weights.

10-4.18 COMPACTION AND COMPACTION TESTING (PIPE ZONE)

Compaction testing for purposes of acceptance of the water pipeline installation shall be conducted by SJWD at SJWD's cost. SJWD will use an independent state-certified testing service.

Contractor shall schedule pipeline installation days with the SJWD Construction Inspector at least 24 hours in advance such that SJWD can schedule the compaction testing.

Contractor shall allow, provide, facilitate and assist SJWD personnel and SJWD's testing service personnel with access to the trench or other excavation to perform any and all inspection, observation and testing, at no additional cost.

Testing will include sand cone and nuclear methods. All testing will be done under the direction of SJWD's Construction Inspector and/or a SJWD authorized technical representative of SJWD's soils engineering company. SJWD's Construction Inspector will attempt to provide Contractor with feedback in the field as to the results of the compaction testing however, sand cone test results will involve off-site laboratory analysis and turn-around time.

For this Project, Contractor is to use an engineered (specified) sand material for the bedding and initial fill material (see SJWD Standard Detail Sheet 11). Contractor shall have a representative sample of the bedding and initial backfill material delivered to site 48 hours prior to start of compaction work such that a compaction curve can be established by SJWD's testing service. Sand material being used will be from same supplier through out project, and SJWD reserves the right to collect and test samples of this material at any time.

In the event that any material fails the specification or compaction Contractor, at their sole cost, shall remove and replace all failed material and compact the affected area in accordance with the specifications.

Material shall be clean and free of organics and shall meet the other requirements as indicated on SJWD Standard Detail Sheet 11.

Unless otherwise indicated on the Drawings or associated Project Documentation, the minimum relative compaction within the pipe zone which extends (6") minimum under pipe, (8") minimum each side of bell of pipe and (12") above pipe shall be ninety percent. Above the initial backfill zone shall be at ninety five percent minimum unless otherwise directed by the Encroachment Permit or Resident Engineer.

10-4.19 DISINFECTION AND ACCEPTANCE TESTING

Testing operations, and in particular disinfection, shall be scheduled by the Contractor as late as possible during the contract time period so as to assure the maximum degree of sterility of the facilities before the Work is accepted by SJWD.

During all testing the new water pipeline(s) shall be kept physically separated from the active distribution system, using a physical separation method approved by SJWD, until satisfactory bacteriological testing has been completed and the disinfectant water has been flushed out. Water supply shall be provided through a temporary connection which shall include an appropriate cross-connection control device. The supply connection shall be physically disconnected from the new main during the hydrostatic pressure testing period.

Releases of water from pipelines, after testing and disinfection have been completed, shall be in accordance with a written testing and disposal plan. The Plan shall provide the stationing and methods for capping or plugging the water pipeline. The testing and disposal plan shall be submitted by the Contractor and shall be approved by the Engineer and SJWD.

Length of test sections shall not exceed 2,000 lineal feet of main without written approval by SJWD.

Testing against valves shall be pre-approved by SJWD, and if approved shall be at the sole risk of the Contractor. Suspected leaking of these valves will not be accepted as a reason for having not passed the pressure testing requirements. Leaking valves shall be repaired or replaced prior to the start of another testing sequence. All new valves shall be tested against a reduced pressure side. Butterfly valves shall be tested in both directions.

Bacteriological sampling and testing shall be performed by the District.

Contractor shall be responsible for disinfection, hydrostatic pressure and leakage testing, and flushing of the water transmission pipeline and appurtenances. All testing shall conform to AWWA Standards, SJWD requirements, and any applicable permit conditions. All testing shall be conduced with the oversight of the SJWD Construction Inspector or SJWD designated representative.

Contractor shall furnish all hoses, pumps, injection equipment, pressure gauges, leakage measuring devices, connections, relief valves, temporary pressure heads, backflow prevention devices, flowmeters, and other necessary apparatus and personnel required for disinfecting, hydrostatic pressure and leakage testing, and flushing.

Pressure gauges shall register pressure in pounds per square inch gauge (psig), with 5 psig tick marks, and shall have a range from 0 psig to 50 psig higher than 1.5 times the test pressure. Pressure gauges shall have a calibration tag affixed, indicating it has been calibrated within 45 days of the hydrostatic test.

Before testing the pipeline the Contractor shall complete the following:

A. During construction keep the pipeline as clean as possible to keep dirt and debris from entering the pipeline. Keep the installed pipe ends securely closed off at any time new section of pipe is not being installed. (Note that flushing is not a substitute for preventive measures during construction. Certain contaminants resist flushing at any velocity.)
B. Ensure all physical installation inspection has been completed and the installation has been approved.
C. Backfilling or other approved means of retention has been made.
D. Remove any residual water from the entire pipeline test section.
E. Check and ensure activation of all air vents.
F. Obtain approval from the SJWD Inspector or authorized representative prior to beginning any testing.
G. Connect a SJWD approved construction flowmeter and double check (RPP type) backflow prevention device to make a single connection to the SJWD identified supply source. The backflow device shall have a test certification tag prepared by a certified tester within the prior 6 months.

The testing sequence shall be as follows:

Initial Flushing and Filling

A. Prior to pressure testing and disinfecting the pipeline, fill the pipeline with clean potable water slowly (approximately 1 ft/s) initially to remove air pockets, and then flush the pipeline to remove particulates. Flushing should achieve a minimum velocity of 2.5 ft/sec unless permit conditions or special provisions will not allow or SJWD determines that the required volume of discharge cannot be disposed of to waste.

Hydrostatic Testing and Leak Detection

A. Hydrostatic testing of ductile iron water pipelines shall be in accordance with AWWA C600, these provisions, and per the requirements and direction of SJWD. Hydrostatic testing of PVC water pipelines shall be in accordance with AWWA C605, these provisions, and per the requirements and direction of SJWD. Hydrostatic testing of other pipeline materials shall be per SJWD standards and requirements.
B. The Contractor shall use the chlorinated potable water to perform hydrostatic pressure testing.
C. During filling of the pipeline, air shall be expelled slowly from the pipe and appurtenances in a manner so as not to create excessive surge pressures. All appurtenances shall be left on during the testing procedure. The line shall be filled with water at least twenty-four hours prior to testing when the pipeline has a mortar lining, thus allowing the lining material to become saturated. Water shall be introduced during the filling process from the low end of the pipeline test section to facilitate elimination of air within the pipeline prior to testing. Where air valves or other suitable outlets are not available for releasing air before applying the test, approved taps and fittings shall be installed and later securely plugged.
D. Test pressure shall be established by the SJWD Engineer and unless otherwise directed by the SJWD Construction Inspector shall not be less than 1.25 times the working pressure at the highest point along the test section. Test pressure shall not exceed the pipe or thrust restraint design pressures.
E. The test section shall be allowed to stabilize at the test pressure before conducting the pressure test.
F. Hydrostatic pressure shall be maintained for a minimum duration of two (2) hours.
G. Unless other wise approved by the SJWD Engineer, no measurable leakage shall be allowed. If any leakage is to be allowed it shall be measured using the make-up water method, not by a drop in pressure at the gauge over a period of time, and the testing allowance shall be derived using a SJWD Engineer approved formula.
H. The Contractor shall determine the cause of unacceptable leakage results, take acceptable corrective measures as approved by the SJWD Construction Inspector and in accordance with the Project Specifications, and conduct subsequent tests until the pipeline meets the allowable leakage criteria. The contractor shall identify the leakage location(s) and shall perform any excavation required to locate and repair leaks or other defects which may develop during the test, including removing backfill that has already been placed. The leakage location(s) and the cause shall be observed by the SJWD Construction Inspector

prior to making any corrective measures. All costs associated with any repairs and re-testing shall be borne by the Contractor.

Disinfection and Residual Testing

A. For the disinfection task, pipeline filling of heavily chlorinated water shall occur at a slow and careful pace (≤ 1 ft/sec, slug flow) per the direction of the SJWD Construction Inspector or SJWD designated representative. Air shall have already been expelled from the pipe and appurtenances, mortar lining shall have been saturated (24-hours minimum), and all appurtenances shall be left on during the testing procedure.
B. Chlorination of the pipeline shall be done using liquid chlorine in accordance with ANSI/AWWA Standard C651, these provisions, and per the requirements and direction of SJWD. Solid forms of chlorine (granular or tablet forms) shall not be allowed. Injection equipment shall make use of a chlorine solution feed (metering) pump capable of controlling the dosing rate. Inject liquid chlorine (NSF certified for potable water, sodium hypochlorite) into the pipeline while filling to achieve a free chlorine residual measurement of 100 ppm (mg/L).
C. Chlorinated water shall then be retained in the main for at least 24-hours, during which time all valves, hydrants and other appurtenances within the test section shall be operated to ensure disinfection of these appurtenances. The free chlorine residual shall be measured as it flows through the main and shall not drop below 50 mg/L. If the residual drops below 50 mg/L the injection equipment shall be relocated to the head of the slug flow and injection shall resume at that location. At the end of the 24-hour period the measured residual shall not be less than 10 mg/L.
D. Residual samples shall be collected at locations along the pipeline identified by SJWD Construction Inspector or SJWD authorized representative.
E. Re-disinfection, if required due to test failure, shall be performed by the Contractor at the Contractor's expense. Costs for additional sampling and testing shall be borne by the Contractor.

Final Flushing and Bacteriological Testing

A. After passing the hydrostatic and disinfection testing the tested section of the pipeline shall be flushed using clean, potable water from a SJWD approved source through a flowmeter and a certified backflow prevention device. Inlets and outlets shall be sized to provide adequate velocity to flush the main. The minimum inlet/outlet size shall be as directed by the SJWD Construction Inspector and for 14-in and larger pipelines shall be a minimum of 6-inches.
B. Any and all discharged chlorinated water shall be dechlorinated to a concentration of 0.01 ppm (mg/L) or less. Dechlorinated discharges shall be disposed of such that water does not flood, inundate or damage property. In no case shall water be discharged directly to a river, creek, pond or other surface water unless so approved by the jurisdictional agency, the property owner and by authorized permit. Any sampling and testing requirements associated with discharges shall be accomplished and paid for by the Contractor.
C. Samples for bacteriological testing shall be collected by the SJWD Construction Inspector or SJWD designated representative.

D. If tests confirm that the waterline is not coliform bacteria free, the Contractor shall re-chlorinate and re-flush the pipeline until a passing coliform bacteria test has been achieved. Costs for re-flushing, re-chlorinating, and re-testing shall be borne by the Contractor.

10-4.20 CONNECTION TO EXISTING WATER DISTRIBUTION SYSTEM

After successful completion of hydrostatic pressure testing and disinfection, the Contractor may connect the transmission main to the existing system upon written approval from the SJWD Construction Inspector or SJWD authorized representative.

New pipe, fittings, valves and other ancillary materials required to make the connection but not included in the hydrostatic testing and disinfection procedures for the pipeline shall be disinfected prior to connection in accordance with AWWA Standard C651 for short connections and under supervision of the SJWD Construction Inspector. Contractor shall notify the SJWD Construction Inspector or SJWD representative a minimum of 48 hours prior to the planned connection operations.

Under all cases only SJWD personnel shall operate any valves on the existing water system throughout the limits of the Project. The Contractor shall request this service after complete preparation, satisfactory to the Engineer and the SJWD Construction Inspector or SJWD authorized representative, is made to minimize the time of any water system shutdown.

10-4.21 REPAIRS REQUIRED BY TRENCH SETTLEMENT

If at any time during a period of one year dating from the date of final acceptance of the project, there shall be any settlement or erosion of the trenches requiring repairs to be made, or should any other defect appear in the system due to negligence of carelessness on the part of the Contractor, the Engineer may notify the Contractor to immediately make such repairs as may be deemed necessary at the Contractor's expense.

10-4.22 WARRANTY

All work under this section shall be guaranteed by Contractor for a minimum of one (1) year from the date of acceptance by SJWD's Board.

10-4.23 PAYMENT

The price paid for the potable water pipeline and facilities shall include full compensation for furnishing all labor, materials, tools, equipment, and incidentals, and for doing all the work involved in installation, complete in place as shown on the plans, as specified in the Standard Specifications, these special provisions, SJWD's standards and requirements, and as directed by the Engineer and SJWD's Engineer and Construction Inspector.

Where the contract provides for payment on a unit price basis, the quantities of work performed will be computed by SJWD on the basis of measurements taken by the SJWD, and these measurements shall be final and conclusive.

All quantities of work computed under the contract shall be based upon measurements by SJWD according to United States Measurements and Weights. Methods of measurement are specified herein and in the Standard Specifications.

Full compensation for conforming to the provisions of this section, not otherwise provided for, shall be considered as included in prices paid for the most applicable bidding item on the Bid Schedule and no additional compensation will be allowed therefore

SECTION 11. MODIFIED STANDARD SPECIFICATION SECTIONS

AMENDMENTS TO MAY 2006 STANDARD SPECIFICATIONS

UPDATED MARCH 16, 2007

Amendments to the Standard Specifications set forth in these special provisions shall be considered as part of the Standard Specifications for the purposes set forth in Section 5-1.04, "Coordination and Interpretation of Plans, Standard Specifications and Special Provisions," of the Standard Specifications. Whenever either the term "Standard Specifications is amended" or the term "Standard Specifications are amended" is used in the special provisions, the text or table following the term shall be considered an amendment to the Standard Specifications. In case of conflict between such amendments and the Standard Specifications, the amendments shall take precedence over and be used in lieu of the conflicting portions.

SECTION 1: DEFINITIONS AND TERMS

Issue Date: January 19, 2007

Section 1-1.01, "General," of the Standard Specifications is amended by adding the following:

- The Department is gradually changing the style and language of the specifications. The new style and language includes:

1. Use of:

    1.1. Imperative mood
    1.2. Introductory modifiers
    1.3. Conditional clauses
2. Elimination of:

    2.1. Language variations
    2.2. Definitions for industry-standard terms
    2.3. Redundant specifications
    2.4. Needless cross-references

- The use of this new style does not change the meaning of a specification not yet using this style.
- The specifications are written to the Bidder before award and the Contractor after. Before award, interpret sentences written in the imperative mood as starting with "The Bidder must" and interpret "you" as "the Bidder" and "your" as "the Bidder's." After award, interpret

sentences written in the imperative mood as starting with "The Contractor must" and interpret "you" as "the Contractor" and "your" as "the Contractor's."

- Unless an object or activity is specified to be less than the total, the quantity or amount is all of the object or activity.
- All items in a list apply unless the items are specified as choices.
- Interpret terms as defined in the Contract documents. A term not defined in the Contract documents has the meaning defined in Means Illustrated Construction Dictionary, Condensed Version, Second Edition.

Section 1, "Definitions and Terms," of the Standard Specifications is amended by adding the following sections:

1-1.082 BUSINESS DAY

- Day on the calendar except Saturday or holiday.

1-1.084 CALIFORNIA MANUAL ON UNIFORM TRAFFIC CONTROL DEVICES

- The California Manual on Uniform Traffic Control Devices for Streets and Highways (California MUTCD) is issued by the Department of Transportation and is the Federal Highway Administration's MUTCD 2003 Edition, as amended for use in California.

1-1.245 HOLIDAY

- Day designated as a State holiday under Govt Code § 6700 et seq. except September 9th, "Admission Day." The day after Thanksgiving Day is a non-working day. Interpret "legal holiday" as "holiday."

Section 1-1.255, "Legal Holidays," of the Standard Specifications is deleted.

Section 1-1.265, "Manual on Uniform Traffic Control Devices," of the Standard Specifications is deleted.

Section 1-1.266, "Manual on Uniform Traffic Control Devices California Supplement," of the Standard Specifications is deleted.

Section 1-1.39 "State," of the Standard Specifications is amended to read:

1-1.39 STATE

- The State of California, including its agencies, departments, or divisions, whose conduct or action is related to the work.

SECTION 3: AWARD AND EXECUTION OF CONTRACT

Issue Date: December 11, 2006

Section 3-1.025, "Insurance Policies," of the Standard Specifications is amended to read:

3-1.025 INSURANCE POLICIES

- The successful bidder shall submit:

1. Copy of its commercial general liability policy and its excess policy or binder until such time as a policy is available, including the declarations page, applicable endorsements, riders, and other modifications in effect at the time of contract execution. Standard ISO form No. CG 0001 or similar exclusions are allowed if not inconsistent with Section 7-1.12, "Indemnification and Insurance." Allowance of additional exclusions is at the discretion of the Department.
2. Certificate of insurance showing all other required coverages. Certificates of insurance, as evidence of required insurance for the auto liability and any other required policy, shall set forth deductible amounts applicable to each policy and all exclusions that are added by endorsement to each policy. The evidence of insurance shall provide that no cancellation, lapse, or reduction of coverage will occur without 10 days prior written notice to the Department.
3. A declaration under the penalty of perjury by a certified public accountant certifying the accountant has applied Generally Accepted Accounting Principles (GAAP) guidelines confirming the successful bidder has sufficient funds and resources to cover any self-insured retentions if the self-insured retention is $50,000 or higher.

- If the successful bidder uses any form of self-insurance for workers compensation in lieu of an insurance policy, it shall submit a certificate of consent to self-insure in accordance with the provisions of Section 3700 of the Labor Code.

Section 3-1.03, "Execution of Contract," of the Standard Specifications is amended to read:

3-1.03 EXECUTION OF CONTRACT

- The contract shall be signed by the successful bidder and returned, together with the contract bonds and the documents identified in Section 3-1.025, "Insurance Policies," within 10 business days of receiving the contract for execution.

Section 3-1.04, "Failure to Execute Contract," of the Standard Specifications is amended to read:

3-1.04 FAILURE TO EXECUTE CONTRACT

- Failure of the lowest responsible bidder, the second lowest responsible bidder, or the third lowest responsible bidder to execute the contract as required in Section 3-1.03, "Execution of Contract," within 10 business days of receiving the contract for execution shall be just cause for the forfeiture of the proposal guaranty. The successful bidder may file with the Department a written notice, signed by the bidder or the bidder's authorized representative, specifying that the bidder will refuse to execute the contract if it is presented. The filing of this notice shall have the same force and effect as the failure of the bidder to execute the contract and furnish acceptable bonds within the time specified.

SECTION 7: LEGAL RELATIONS AND RESPONSIBILITIES

Issue Date: February 16, 2007

Section 7-1.01A(6), "Workers' Compensation," of the Standard Specifications is amended to read:

7-1.101A(6) (Blank)

The first sentence of the eighth paragraph of Section 7-1.09, "Public Safety," of the Standard Specifications is amended to read:

• Signs, lights, flags, and other warning and safety devices and their use shall conform to the requirements set forth in Part 6 of the California MUTCD.

The sixteenth paragraph of Section 7-1.09, "Public Safety," of the Standard Specifications is amended to read:

• When vertical clearance is temporarily reduced to 15.5 feet or less, low clearance warning signs shall be placed in accordance with Part 2 of the California MUTCD and as directed by the Engineer. Signs shall conform to the dimensions, color, and legend requirements of the California MUTCD and these specifications except that the signs shall have black letters and numbers on an orange retroreflective background. W12-2P signs shall be illuminated so that the signs are clearly visible.

Section 7-1.12, "Indemnification and Insurance," of the Standard Specifications is amended to read:

7-1.12 INDEMNIFICATION AND INSURANCE

• The Contractor's obligations regarding indemnification of the State of California and the requirements for insurance shall conform to the provisions in Section 3-1.025, "Insurance Policies," and Sections 7-1.12A, "Indemnification," and 7-1.12B, "Insurance," of this Section 7-1.12.

7-1.12A Indemnification

• The Contractor shall defend, indemnify, and save harmless the State, including its officers, employees, and agents (excluding agents who are design professionals) from any and all claims, demands, causes of action, damages, costs, expenses, actual attorneys' fees, losses or liabilities, in law or in equity (Section 7-1.12A Claims) arising out of or in connection with the Contractor's performance of this contract for:

1. Bodily injury including, but not limited to, bodily injury, sickness or disease, emotional injury or death to persons, including, but not limited to, the public, any employees or agents of the Contractor, the State, or any other contractor; and
2. Damage to property of anyone including loss of use thereof; caused or alleged to be caused in whole or in part by any negligent or otherwise legally actionable act or omission of the Contractor or anyone directly or indirectly employed by the Contractor or anyone for whose acts the Contractor may be liable.

• Except as otherwise provided by law, these requirements apply regardless of the existence or degree of fault of the State. The Contractor is not obligated to indemnify the State for Claims arising from conduct delineated in Civil Code Section 2782 and to Claims arising from any defective or substandard condition of the highway that existed at or before the start of work, unless this condition has been changed by the work or the scope of the work requires the Contractor to maintain existing highway facilities and the Claim arises from the Contractor's failure to maintain. The Contractor's defense and indemnity obligation shall extend to Claims arising after the work is completed and accepted if the Claims are directly related to alleged acts or omissions by the Contractor that occurred during the course of the work. State inspection is not a waiver of full compliance with these requirements.

• The Contractor's obligation to defend and indemnify shall not be excused because of the Contractor's inability to evaluate liability or because the Contractor evaluates liability and determine that the Contractor is not liable. The Contractor shall respond within 30 days to the tender of any Claim for defense and indemnity by the State, unless this time has been extended by the State. If the Contractor fails to accept or reject a tender of defense and indemnity within 30 days, in addition to any other remedy authorized by law, the Department may withhold such funds the State reasonably considers necessary for its defense and indemnity until disposition has been made of the Claim or until the Contractor accepts or rejects the tender of defense, whichever occurs first.

• With respect to third-party claims against the Contractor, the Contractor waives all rights of any type to express or implied indemnity against the State, its officers, employees, or agents (excluding agents who are design professionals).

• Nothing in the Contract is intended to establish a standard of care owed to any member of the public or to extend to the public the status of a third-party beneficiary for any of these indemnification specifications.

7-1.12B Insurance

7-1.12B(1) General

• Nothing in the contract is intended to establish a standard of care owed to any member of the public or to extend to the public the status of a third-party beneficiary for any of these insurance specifications.

7-1.12B(2) Casualty Insurance

• The Contractor shall procure and maintain insurance on all of its operations with companies acceptable to the State as follows:

1. The Contractor shall keep all insurance in full force and effect from the beginning of the work through contract acceptance.
2. All insurance shall be with an insurance company with a rating from A.M. Best Financial Strength Rating of A- or better and a Financial Size Category of VII or better.
3. The Contractor shall maintain completed operations coverage with a carrier acceptable to the State through the expiration of the patent deficiency in construction statute of repose set forth in Code of Civil Procedure Section 337.1.

7-1.12B(3) Workers' Compensation and Employer's Liability Insurance

- In accordance with Labor Code Section 1860, the Contractor shall secure the payment of worker's compensation in accordance with Labor Code Section 3700.
- In accordance with Labor Code Section 1861, the Contractor shall submit to the Department the following certification before performing the work:

> I am aware of the provisions of Section 3700 of the Labor Code which require every employer to be insured against liability for workers' compensation or to undertake self-insurance in accordance with the provisions of that code, and I will comply with such provisions before commencing the performance of the work of this contract.

- Contract execution constitutes certification submittal.
- The Contractor shall provide Employer's Liability Insurance in amounts not less than:

1. $1,000,000 for each accident for bodily injury by accident
2. $1,000,000 policy limit for bodily injury by disease
3. $1,000,000 for each employee for bodily injury by disease

- If there is an exposure of injury to the Contractor's employees under the U.S. Longshoremen's and Harbor Workers' Compensation Act, the Jones Act, or under laws, regulations, or statutes applicable to maritime employees, coverage shall be included for such injuries or claims.

7-1.12B(4) Liability Insurance

7-1.12B(4)(a) General

- The Contractor shall carry General Liability and Umbrella or Excess Liability Insurance covering all operations by or on behalf of the Contractor providing insurance for bodily injury liability and property damage liability for the following limits and including coverage for:

1. Premises, operations, and mobile equipment
2. Products and completed operations
3. Broad form property damage (including completed operations)
4. Explosion, collapse, and underground hazards
5. Personal injury
6. Contractual liability

7-1.12B(4)(b) Liability Limits/Additional Insureds

- The limits of liability shall be at least the amounts shown in the following table:

Total Bid	For Each Occurrence[1]	Aggregate for Products/Completed Operation	General Aggregate[2]	Umbrella or Excess Liability[3]
≤$1,000,000	$1,000,000	$2,000,000	$2,000,000	$5,000,000
>$1,000,000 ≤$5,000,000	$1,000,000	$2,000,000	$2,000,000	$10,000,000
>$5,000,000 ≤$25,000,000	$2,000,000	$2,000,000	$4,000,000	$15,000,000
>$25,000,000	$2,000,000	$2,000,000	$4,000,000	$25,000,000

1. Combined single limit for bodily injury and property damage.
2. This limit shall apply separately to the Contractor's work under this contract.
3. The umbrella or excess policy shall contain a clause stating that it takes effect (drops down) in the event the primary limits are impaired or exhausted.

• The Contractor shall not require certified Small Business subcontractors to carry Liability Insurance that exceeds the limits in the table above. Notwithstanding the limits specified herein, at the option of the Contractor, the liability insurance limits for certified Small Business subcontractors of any tier may be less than those limits specified in the table. For Small Business subcontracts, "Total Bid" shall be interpreted as the amount of subcontracted work to a certified Small Business.

• The State, including its officers, directors, agents (excluding agents who are design professionals), and employees, shall be named as additional insureds under the General Liability and Umbrella Liability Policies with respect to liability arising out of or connected with work or operations performed by or on behalf of the Contractor under this contract. Coverage for such additional insureds does not extend to liability:

1. Arising from any defective or substandard condition of the roadway which existed at or before the time the Contractor started work, unless such condition has been changed by the work or the scope of the work requires the Contractor to maintain existing roadway facilities and the claim arises from the Contractor's failure to maintain;
2. For claims occurring after the work is completed and accepted unless these claims are directly related to alleged acts or omissions of the Contractor that occurred during the course of the work; or
3. To the extent prohibited by Insurance Code Section 11580.04

• Additional insured coverage shall be provided by a policy provision or by an endorsement providing coverage at least as broad as Additional Insured (Form B) endorsement form CG 2010, as published by the Insurance Services Office (ISO), or other form designated by the Department.

7-1.12B(4)(c) Contractor's Insurance Policy is Primary

• The policy shall stipulate that the insurance afforded the additional insureds applies as primary insurance. Any other insurance or self-insurance maintained by the State is excess only and shall not be called upon to contribute with this insurance.

7-1.12B(5) Automobile Liability Insurance

• The Contractor shall carry automobile liability insurance, including coverage for all owned, hired, and nonowned automobiles. The primary limits of liability shall be not less than

$1,000,000 combined single limit each accident for bodily injury and property damage. The umbrella or excess liability coverage required under Section 7-1.12B(4)(b) also applies to automobile liability.

7-1.12B(6) Policy Forms, Endorsements, and Certificates

- The Contractor shall provide its General Liability Insurance under Commercial General Liability policy form No. CG0001 as published by the Insurance Services Office (ISO) or under a policy form at least as broad as policy form No. CG0001.

7-1.12B(7) Deductibles

- The State may expressly allow deductible clauses, which it does not consider excessive, overly broad, or harmful to the interests of the State. Regardless of the allowance of exclusions or deductions by the State, the Contractor is responsible for any deductible amount and shall warrant that the coverage provided to the State is in accordance with Section 7-1.12B, "Insurance."

7-1.12B(8) Enforcement

- The Department may assure the Contractor's compliance with its insurance obligations. Ten days before an insurance policy lapses or is canceled during the contract period, the Contractor shall submit to the Department evidence of renewal or replacement of the policy.
- If the Contractor fails to maintain any required insurance coverage, the Department may maintain this coverage and withhold or charge the expense to the Contractor or terminate the Contractor's control of the work in accordance with Section 8-1.08, "Termination of Control."
- The Contractor is not relieved of its duties and responsibilities to indemnify, defend, and hold harmless the State, its officers, agents, and employees by the Department's acceptance of insurance policies and certificates.
- Minimum insurance coverage amounts do not relieve the Contractor for liability in excess of such coverage, nor do they preclude the State from taking other actions available to it, including the withholding of funds under this contract.

7-1.12B(9) Self-Insurance

- Self-insurance programs and self-insured retentions in insurance policies are subject to separate annual review and approval by the State.
- If the Contractor uses a self-insurance program or self-insured retention, the Contractor shall provide the State with the same protection from liability and defense of suits as would be afforded by first-dollar insurance. Execution of the contract is the Contractor's acknowledgement that the Contractor will be bound by all laws as if the Contractor were an insurer as defined under Insurance Code Section 23 and that the self-insurance program or self-insured retention shall operate as insurance as defined under Insurance Code Section 22.

SECTION 12: CONSTRUCTION AREA TRAFFIC CONTROL DEVICES

Issue Date: October 6, 2006

The first sentence of the second paragraph of Section 12-1.01, "Description," of the Standard Specifications is amended to read:

- Attention is directed to Part 6 of the California MUTCD.

Section 12-2.01, "Flaggers," of the Standard Specifications is amended to read:

12-2.01 FLAGGERS

- Flaggers while on duty and assigned to traffic control or to give warning to the public that the highway is under construction and of any dangerous conditions to be encountered as a result thereof, shall perform their duties and shall be provided with the necessary equipment in conformance with Part 6 of the California MUTCD. The equipment shall be furnished and kept clean and in good repair by the Contractor at the Contractor's expense.

The first paragraph of Section 12-3.01, "General," of the Standard Specifications is amended to read:

- In addition to the requirements in Part 6 of the California MUTCD, all devices used by the Contractor in the performance of the work shall conform to the provisions in this Section 12-3.

The second sentence of the first paragraph of Section 12-3.06, "Construction Area Signs," of the Standard Specifications is amended to read:

- Construction area signs are shown in or referred to in Part 6 of the California MUTCD.

The first sentence of the fourth paragraph of Section 12-3.06, "Construction Area Signs," of the Standard Specifications is amended to read:

- All construction area signs shall conform to the dimensions, color and legend requirements of the plans, Part 6 of the California MUTCD and these specifications.

The first sentence of the eighth paragraph of Section 12-3.06, "Construction Area Signs," of the Standard Specifications is amended to read:

- Used signs with the specified sheeting material will be considered satisfactory if they conform to the requirements for visibility and legibility and the colors conform to the requirements in Part 6 of the California MUTCD.

SECTION 19: EARTHWORK

Issue Date: January 5, 2007

The first paragraph of Section 19-3.025C, "Soil Cement Bedding," of the Standard Specifications is amended to read:

• Cementitious material used in soil cement bedding shall conform to the provisions in Section 90-2.01, "Cementitious Materials." Supplementary cementitious material will not be required.

The fourth paragraph of Section 19-3.025C, "Soil Cement Bedding," of the Standard Specifications is amended to read:

• The aggregate, cementitious material, and water shall be proportioned either by weight or by volume. Soil cement bedding shall contain not less than 282 pounds of cementitious material per cubic yard. The water content shall be sufficient to produce a fluid, workable mix that will flow and can be pumped without segregation of the aggregate while being placed.

The first paragraph of Section 19-3.062, "Slurry Cement Backfill," of the Standard Specifications is amended to read:

• Slurry cement backfill shall consist of a fluid, workable mixture of aggregate, cementitious material, and water.

The fifth paragraph of Section 19-3.062, "Slurry Cement Backfill," of the Standard Specifications is amended to read:

• Cementitious material shall conform to the provisions in Section 90-2.01, "Cementitious Materials." Supplementary cementitious material will not be required.

The eighth paragraph of Section 19-3.062, "Slurry Cement Backfill," of the Standard Specifications is amended to read:

• The aggregate, cementitious material, and water shall be proportioned either by weight or by volume. Slurry cement backfill shall contain not less than 188 pounds of cementitious material per cubic yard. The water content shall be sufficient to produce a fluid, workable mix that will flow and can be pumped without segregation of the aggregate while being placed.

SECTION 20: EROSION CONTROL AND HIGHWAY PLANTING

Issue Date: January 19, 2007

The last 3 paragraphs of Section 20-2.10, "Seed," of the Standard Specifications are deleted.

The last paragraph of Section 20-3.04A, "General," of the Standard Specifications is deleted.

SECTION 25: AGGREGATE SUBBASES

Issue Date: February 16, 2007

The first paragraph of Section 25-1.02A, "Class 1, Class 2, and Class 3 Aggregate Subbases," of the Standard Specifications is amended to read:

- Aggregate must be clean and free from organic matter and other deleterious substances. Aggregate must consist of any combination of:

1. Broken stone
2. Crushed gravel
3. Natural rough surfaced gravel
4. Sand
5. Up to 100 percent of any combination of processed:

    5.1. Asphalt concrete
    5.2. Portland cement concrete
    5.3. Lean concrete base
    5.4. Cement treated base

The first paragraph of Section 25-1.02B, "Class 4 Aggregate Subbase," of the Standard Specifications is amended to read:

- Aggregate must be clean and free from organic matter and other deleterious substances. Aggregate must consist of any combination of:

1. Broken stone
2. Crushed gravel
3. Natural rough surfaced gravel
4. Sand
5. Up to 100 percent of any combination of processed:

    5.1. Asphalt concrete
    5.2. Portland cement concrete
    5.3. Lean concrete base
    5.4. Cement treated base

SECTION 26: AGGREGATE BASE

Issue Date: February 16, 2007

The first paragraph of Section 26-1.02A, "Class 2 Aggregate Base," of the Standard Specifications is amended to read:

- Aggregate must be clean and free from organic matter and other deleterious substances. Aggregate must consist of any combination of:

1. Broken stone
2. Crushed gravel
3. Natural rough surfaced gravel
4. Sand

5. Up to 100 percent of any combination of processed:

    5.1. Asphalt concrete
    5.2. Portland cement concrete
    5.3. Lean concrete base
    5.4. Cement treated base

The first paragraph of Section 26-1.02B, "Class 3 Aggregate Base," of the Standard Specifications is amended to read:

• Aggregate must be clean and free from organic matter and other deleterious substances. Aggregate must consist of any combination of:

1. Broken stone
2. Crushed gravel
3. Natural rough surfaced gravel
4. Sand
5. Up to 100 percent of any combination of processed:

    5.1. Asphalt concrete
    5.2. Portland cement concrete
    5.3. Lean concrete base
    5.4. Cement treated base

SECTION 27: CEMENT TREATED BASES

Issue Date: January 5, 2007

The first paragraph of Section 27-1.02, "Materials," of the Standard Specifications is amended to read:

• Cement shall be Type II portland cement conforming to the provisions in Section 90-2.01A, "Cement."

The third paragraph of Section 27-1.02, "Materials," of the Standard Specifications is amended to read:

• Aggregate for use in Class A cement treated base shall be of such quality that when mixed with cement in an amount not to exceed 5 percent by weight of the dry aggregate and compacted at optimum moisture content, the compressive strength of a sample of the compacted mixture shall not be less than 750 pounds per square inch at 7 days, when tested by California Test 312.

The fourth paragraph of Section 27-1.02, "Materials," of the Standard Specifications is amended to read:

• Aggregate for use in Class B cement treated base shall have a Resistance (R-value) of not less than 60 before mixing with cement and a Resistance (R-value) of not less than 80 after mixing with cement in an amount not to exceed 2.5 percent by weight of the dry aggregate.

SECTION 28: LEAN CONCRETE BASE

Issue Date: January 5, 2007

The first paragraph of Section 28-1.02, "Materials," of the Standard Specifications is amended to read:

• Cement shall be Type II portland cement conforming to the provisions in Section 90-2.01A, "Cement."

The sixth paragraph of Section 28-1.02, "Materials," of the Standard Specifications is amended to read:

• Aggregate shall be of such quality that, when mixed with cement in an amount not to exceed 300 pounds per cubic yard, and tested in conformance with the requirements in California Test 548, the compressive strength of a sample will be not less than 700 pounds per square inch at 7 days.

SECTION 29: TREATED PERMEABLE BASES

Issue Date: January 5, 2007

The second paragraph of Section 29-1.02B, "Cement Treated Permeable Base," of the Standard Specifications is amended to read:

• Cement shall be Type II portland cement conforming to the provisions in Section 90-2.01A, "Cement."

The second paragraph of Section 29-1.04B, "Cement Treated Permeable Base," of the Standard Specifications is amended to read:

• Cement treated permeable base shall contain not less than 287 pounds of cement per cubic yard.

SECTION 40: PORTLAND CEMENT CONCRETE PAVEMENT

Issue Date: January 5, 2007

Section 40-1.015, "Cement Content," is deleted.

Section 40-1.05, "Proportioning," of the Standard Specifications is amended to read:

• Aggregate and cementitious material proportioning shall conform to the provisions in Section 90-5, "Proportioning."

The first paragraph in Section 40-1.105, "Exit Ramp Termini," of the Standard Specifications is amended to read:

• Concrete pavement shall be constructed at the ends of exit ramps when required by the plans or the special provisions. Texturing for exit ramp termini shall be by means of heavy brooming in a direction normal to ramp centerline. The hardened surface shall have a coefficient of friction not less than 0.35 as determined by California Test 342. Minimum cementitious material content of concrete in pavement for exit ramp termini shall be 590 pounds per cubic yard.

The first paragraph in Section 40-1.14, "Payment," of the Standard Specifications is amended to read:

• The contract price paid per cubic yard for concrete pavement shall include full compensation for furnishing all labor, materials (including cementitious material in the amount specified), tools, equipment, and incidentals, and for doing all the work involved in constructing the portland cement concrete pavement, complete in place, as shown on the plans, and as specified in these specifications and the special provisions, and as directed by the Engineer.

SECTION 41: PAVEMENT SUBSEALING AND JACKING

Issue Date: January 5, 2007

The second paragraph of Section 41-1.02, "Materials," of the Standard Specifications is amended to read:

• Cement for grout shall be Type II portland cement conforming to the provisions in Section 90-2.01A, "Cement."

The third paragraph of Section 41-1.02, "Materials," of the Standard Specifications is amended to read:

• Fly ash shall conform to the requirements in AASHTO Designation: M 295 for either Class C or for Class F. The brand of fly ash used in the work shall conform to the provisions for approval of admixture brands in Section 90-4.03, "Admixture Approval."

The fifth paragraph of Section 41-1.02, "Materials," of the Standard Specifications is amended to read:

• Chemical admixtures and calcium chloride may be used. Chemical admixtures in the grout mix shall conform to the provisions in Section 90-4, "Admixtures." Calcium chloride shall conform to ASTM Designation: D 98.

SECTION 49: PILING

Issue Date: January 5, 2007

The first sentence of the sixth paragraph of Section 49-1.03, "Determination of Length," of the Standard Specifications is amended to read:

• Indicator compression pile load testing shall conform to the requirements in ASTM Designation: D 1143-81.

The first sentence of the seventh paragraph of Section 49-1.03, "Determination of Length," of the Standard Specifications is amended to read:

• Indicator tension pile load testing shall conform to the requirements in ASTM Designation: D 3689-90.

The sixth paragraph in Section 49-1.04, "Load Test Piles," of the Standard Specifications is amended to read:

• The Contractor may use additional cementitious material in the concrete for the load test and anchor piles.

SECTION 50: PRESTRESSING CONCRETE

Issue Date: January 5, 2007

The seventh paragraph in Section 50-1.07, "Ducts," of the Standard Specifications is amended to read:

• All ducts with a total length of 400 feet or more shall be vented. Vents shall be placed at intervals of not more than 400 feet and shall be located within 6 feet of every high point in the duct profile. Vents shall be 1/2 inch minimum diameter standard pipe or suitable plastic pipe. Connections to ducts shall be made with metallic or plastic structural fasteners. Plastic components, if selected, shall not react with the concrete or enhance corrosion of the prestressing steel and shall be free of water soluble chlorides. The vents shall be mortar tight, taped as necessary, and shall provide means for injection of grout through the vents and for sealing the vents. Ends of vents shall be removed one inch below the roadway surface after grouting has been completed.

Item B of the eleventh paragraph in Section 50-1.08, "Prestressing," of the Standard Specifications is amended to read:

B. When the concrete is designated by class or cementitious material content, either the concrete compressive strength shall have reached the strength shown on the plans at the time of stressing or at least 28 days shall have elapsed since the last concrete to be prestressed has been placed, whichever occurs first.

The second and third paragraphs in Section 50-1.09, "Bonding and Grouting," of the Standard Specifications are amended to read:

- Grout shall consist of cement and water and may contain an admixture if approved by the Engineer.
- Cement shall conform to the provisions in Section 90-2.01A, "Cement."

The first paragraph in Section 50-1.11, "Payment," of the Standard Specifications is amended to read:

- No separate payment will be made for pretensioning precast concrete members. Payment for pretensioning precast concrete members shall be considered as included in the contract price paid for furnish precast members as provided for in Section 51, "Concrete Structures."

SECTION 51: CONCRETE STRUCTURES

Issue Date: March 16, 2007

The first sentence of the eleventh paragraph of Section 51-1.05, "Forms," of the Standard Specifications is amended to read:

- Form panels for exposed surfaces shall be furnished and placed in uniform widths of not less than 3 feet and in uniform lengths of not less than 6 feet, except at the end of continuously formed surfaces where the final panel length required is less than 6 feet.

The first sentence of the eleventh paragraph of Section 51-1.06C, "Removing Falsework," of the Standard Specifications is amended to read:

- Falsework for box culverts and other structures with decks lower than the roadway pavement and with span lengths of 14 feet or less shall not be released until the last placed concrete has attained a compressive strength of 1,600 psi, provided that curing of the concrete is not interrupted.

The fourth paragraph in Section 51-1.12D, "Sheet Packing, Preformed Pads, and Board Fillers," of the Standard Specifications is amended to read:

- Expanded polystyrene shall be a commercially available polystyrene board. Expanded polystyrene shall have a minimum flexural strength of 35 psi determined in conformance with the requirements in ASTM Designation: C 203 and a compressive yield strength of between 16 and 40 psi at 5 percent compression. Surfaces of expanded polystyrene against which concrete is placed shall be faced with hardboard. Hardboard shall be 1/8 inch minimum thickness, conforming to ANSI A135.4, any class. Other facing materials may be used provided they furnish equivalent protection. Boards shall be held in place by nails, waterproof adhesive, or other means approved by the Engineer.

The table in the sixth paragraph of Section 51-1.12F, "Sealed Joints," of the Standard Specifications is amended to read:

Movement Rating (MR)	Seal Type
MR ≤ 5/8 inch	Type A or Type B
5/8 inch < MR ≤ 1-1/4 inches	Type A (silicone only) or Type B
1-1/4 inches < MR ≤ 2 inches	Type B
2 inches < MR ≤ 4 inches	Joint Seal Assembly (Strip Seal)
MR > 4 inches	Joint Seal Assembly (Modular Unit) or Seismic Joint

The first sentence of the eleventh paragraph of Section 51-1.12F(3)(b), "Type B Seal," of the Standard Specifications is amended to read:

- Samples of the prefabricated joint seals, not less than 3 feet in length, will be taken by the Engineer from each lot of material.

The fourth and fifth sentences of the sixth paragraph of Section 51-1.12H(1), "Plain and Fabric Reinforced Elastomeric Bearing Pads," of the Standard Specifications are amended to read:

- Each ply of fabric shall have a breaking strength of not less than 800 pounds per inch of width in each thread direction when 3" x 36" samples are tested on split drum grips. The bond between double plies shall have a minimum peel strength of 20 pounds per inch.

The hardness (Type A) requirement in the table in the eighth paragraph of Section 51-1.12H(1), "Plain and Fabric Reinforced Elastomeric Bearing Pads," of the Standard Specifications is amended to read:

Hardness (Type A)	D 2240 with 2kg mass.	55 ±5

The first sentence of subparagraph A of the first paragraph of Section 51-1.12H(2), "Steel Reinforced Elastomeric Bearings," of the Standard Specifications is amended to read:

- The bearings shall consist of alternating steel laminates and internal elastomer laminates with top and bottom elastomer covers. Steel laminates shall have a nominal thickness of 0.075 inch (14 gage).

The first paragraph in Section 51-1.135, "Mortar," of the Standard Specifications is amended to read:

- Mortar shall be composed of cementitious material, sand, and water proportioned and mixed as specified in this Section 51-1.135.

The third paragraph in Section 51-1.135, "Mortar," of the Standard Specifications is amended to read:

• The proportion of cementitious material to sand, measured by volume, shall be one to 2 unless otherwise specified.

The third sentence of the fourth paragraph of Section 51-1.17, "Finishing Bridge Decks," of the Standard Specifications is amended to read:

• The surfaces shall have a profile trace showing no high points in excess of 0.25 inch, and the portions of the surfaces within the traveled way shall have a profile count of 5 or less in any 100-foot section.

Section 51-1.17, "Finishing Bridge Decks," of the Standard Specifications is amended by adding the following subsection:

51-1.17A DECK CRACK TREATMENT

• The Contractor shall use all means necessary to minimize the development of shrinkage cracks.

• The Contractor shall remove all equipment and materials from the deck and clean the surface as necessary for the Engineer to measure the surface crack intensity. Surface crack intensity will be determined by the Engineer after completion of concrete cure, before prestressing, and before the release of falsework. In any 500 square foot portion of deck within the limits of the new concrete deck, should the intensity of cracking be such that there are more than 16 feet of cracks whose width at any location exceeds 0.02 inch, the deck shall be treated with methacrylate resin. The area of deck to be treated shall have a width that extends for the entire width of new deck inside the concrete barriers and a length that extends at least 5 feet beyond the furthest single continuous crack outside the 500 square foot portion, measured from where that crack exceeds 0.02 inch in width, as determined by the Engineer.

• Deck crack treatment shall include furnishing, testing, and application of methacrylate resin and sand. If grinding is required, deck treatment shall take place before grinding.

51-1.17A(1) Submittals

• Before starting deck treatment, the Contractor shall submit plans in conformance with Section 5-1.02, "Plans and Working Drawings," for the following:

1. Public safety plan for the use of methacrylate resin
2. Placement plan for the construction operation

• The plans shall identify materials, equipment, and methods to be used.

• The public safety plan for the use of methacrylate resin shall include details for the following:

1. Shipping
2. Storage
3. Handling
4. Disposal of residual methacrylate resin and the containers

• The placement plan for construction shall include the following:

1. Schedule of deck treatment for each bridge. The schedule shall be consistent with "Maintaining Traffic" of the special provisions and shall include time for the Engineer to perform California Test 342.
2. Methods and materials to be used, including the following:

    2.1. Description of equipment for applying the resin
    2.2. Description of equipment for applying the sand
    2.3. Gel time range and final cure time for the resin

• If the measures proposed in the safety plan are inadequate to provide for public safety associated with the use of methacrylate resin, the Engineer will reject the plan and direct the Contractor to revise the plan. Directions for revisions will be in writing and include detailed comments. The Engineer will notify the Contractor of the approval or rejection of a submitted or revised plan within 15 days of receipt of that plan.

• In the event the Engineer fails to complete the review within the time allowed, and if, in the opinion of the Engineer, completion of the work is delayed or interfered with by reason of the Engineer's delay in completing the review, the Contractor will be compensated for any resulting loss, and an extension of time will be granted, in the same manner as provided for in Section 8-1.09, "Right of Way Delays."

51-1.17A(2) Materials

• Before using methacrylate resin, a Material Safety Data Sheet shall be submitted for each shipment of resin.

• Methacrylate resin shall be low odor and have a high molecular weight. Before adding initiator, the resin shall have a maximum volatile content of 30 percent when tested in conformance with the requirements in ASTM Designation: D 2369, and shall conform to the following:

PROPERTY	REQUIREMENT	TEST METHOD
* Viscosity	25 cP, maximum, (Brookfield RVT with UL adaptor, 50 RPM at 77°F	ASTM D 2196
* Specific Gravity	0.90 minimum, at 77°F	ASTM D 1475
* Flash Point	180°F, minimum	ASTM D 3278
* Vapor Pressure	1.0 mm Hg, maximum, at 77°F	ASTM D 323
Tack-free Time	400 minutes, maximum at 25°C	Specimen prepared per California Test 551
PCC Saturated Surface-Dry Bond Strength	3.5 MPa, minimum at 24 hours and 21±1°C	California Test 551
* Test shall be performed before adding initiator.		

51-1.17A(3) Testing

- The Contractor shall allow 20 days for sampling and testing by the Engineer of the methacrylate resin before proposed use. If bulk resin is to be used, the Contractor shall notify the Engineer in writing at least 15 days before the delivery of the bulk resin to the job site. Bulk resin is any resin stored in containers in excess of 55 gallons.
- Before starting production treatment, the Contractor shall treat a test area of approximately 500 square feet that is within the project limits and at a location approved by the Engineer. When available the test area shall be outside of the traveled way. Weather and pavement conditions during the test treatment shall be similar to those expected on the deck. Equipment used for testing shall be similar to those used for deck treating operations.
- During test and production deck treatment, test tiles shall be used to evaluate the resin cure time. The Contractor shall coat at least one 4" x 4" commercial quality smooth glazed tile for each batch of methacrylate resin. The coated tile shall be placed adjacent to the corresponding treated area. Sand shall not be applied to the test tiles.
- The acceptance criteria for a treated area is as follows:

1. The test tiles are dry to the touch.
2. The treated deck surface is tack free (non-oily).
3. The sand cover adheres and resists brushing by hand.
4. Excess sand has been removed by vacuuming or sweeping.
5. The coefficient of friction is at least 0.35 when tested in conformance with California Test 342.

- Deck treatment on the test area shall demonstrate that the methods and materials meet the acceptance criteria and that the production work will be completed within the specified time for maintaining traffic.
- If a test or production area fails to meet the acceptance criteria, as determined by the Engineer, the treatment will be rejected, and the treatment shall be removed and replaced until the area complies with the acceptance criteria.

51-1.17A(4) Construction

- Equipment shall be fitted with suitable traps, filters, drip pans, or other devices as necessary to prevent oil or other deleterious material from being deposited on the deck.
- Before deck treatment with methacrylate resin, the bridge deck surface shall be cleaned by abrasive blasting, and all loose material shall be blown from visible cracks using high-pressure air. Concrete curing seals shall be cleaned from the deck surface to be treated, and the deck shall be dry when blast cleaning is performed. If the deck surface becomes contaminated at any time before placing the resin, the deck surface shall be cleaned by abrasive blasting.
- Where abrasive blasting is being performed within 10 feet of a lane occupied by public traffic, the residue including dust shall be removed immediately after contact between the abrasive and the surface being treated. The removal shall be by a vacuum attachment operating concurrently with the abrasive blasting operation.
- A compatible promoter/initiator system shall be capable of providing the resin gel time range shown on the placement plan. Gel time shall be adjusted to compensate for the changes in temperature throughout treatment application.

- Resin shall be applied by machine and by using a two-part resin system with a promoted resin for one part and an initiated resin for the other part. This two-part resin system shall be combined at equal volumes to the spray bars through separate positive displacement pumps. Combining of the 2 components shall be by either static in-line mixers or by external intersecting spray fans. The pump pressure at the spray bars shall not be great enough to cause appreciable atomization of the resin. Compressed air shall not be used to produce the spray. A shroud shall be used to enclose the spray bar apparatus.
- At the Contractor's option, manual application may be used when necessary to prevent overspray of resin onto adjacent traffic. For manual application, the quantity of resin mixed with promoter and initiator shall be limited to 5 gallons at a time.
- The Contractor shall apply methacrylate resin only to the specified area. Barriers, railing, joints, and drainage facilities shall be adequately protected to prevent contamination by the treatment material. Contaminated items shall be repaired at the Contractor's expense.
- The relative humidity shall be less than 90 percent at the time of treatment. The prepared area shall be dry and the surface temperature shall be at least 50°F and not more than 100°F when the resin is applied. The rate of application of promoted/initiated resin shall be approximately 90 square feet per gallon; the exact rate shall be determined by the Engineer.
- The deck surfaces to be treated shall be completely covered with resin so the resin penetrates and fills all cracks. The resin shall be applied within 5 minutes after complete mixing. A significant increase in viscosity shall be cause for rejection. Excess material shall be redistributed by squeegees or brooms within 10 minutes after application. For textured deck surfaces, including grooved surfaces, excess material shall be removed from the texture indentations.
- After the resin has been applied, at least 20 minutes shall elapse before applying sand. The sand shall be commercial quality dry blast sand. At least 95 percent of the sand shall pass the No. 8 sieve and at least 95 percent shall be retained on the No. 20 sieve. The sand shall be applied at a rate of approximately 2 pounds per square yard or until refusal as determined by the Engineer.
- Traffic will not be allowed on treated areas until the acceptance criteria has been met as determined by the Engineer.

The second paragraph in Section 51-1.18C, "Class 2 Surface Finish (Gun Finish)," of the Standard Specifications is amended to read:

- When Class 2 surface finish (gun finish) is specified, ordinary surface finish shall first be completed. The concrete surfaces shall then be abrasive blasted to a rough texture and thoroughly washed down with water. While the washed surfaces are damp, but not wet, a finish coating of machine applied mortar, approximately 1/4 inch thick, shall be applied in not less than 2 passes. The coating shall be pneumatically applied and shall consist of either (1) sand, cementitious material, and water mechanically mixed prior to its introduction to the nozzle, or (2) premixed sand and cementitious material to which water is added prior to its expulsion from the nozzle. The use of admixtures shall be subject to the approval of the Engineer as provided in Section 90, "Portland Cement Concrete." Unless otherwise specified, supplementary cementitious materials will not be required. The proportion of cementitious material to sand shall be not less than one to 4, unless otherwise directed by the Engineer. Sand shall be of a grading suitable for the purpose intended. The machines shall be operated and the coating shall

be applied in conformance with standard practice. The coating shall be firmly bonded to the concrete surfaces on which it is applied.

The fifth paragraph in Section 51-1.18C, "Class 2 Surface Finish (Gun Finish)," of the Standard Specifications is amended to read:

- When surfaces to be finished are in pedestrian undercrossings, the sand shall be silica sand and the cementitious material shall be standard white portland cement.

Section 51-1.23, "Payment," of the Standard Specifications is amended by adding the following:

- Full compensation for deck crack treatment, including execution of the public safety plan, shall be considered as included in the contract price paid per cubic yard for structural concrete, bridge, and no additional compensation will be allowed therefor.

SECTION 52: REINFORCEMENT

Issue Date: May 30, 2006

The table in the eleventh paragraph of Section 52-1.07, "Placing," of the Standard Specifications is amended to read:

Height Zone (H) (Feet above ground)	Wind Pressure Value (psf)
$H \leq 30$	20
$30 < H \leq 50$	25
$50 < H \leq 100$	30
$H > 100$	35

The table in the second paragraph of Section 52-1.08B(1), "Mechanical Splices," of the Standard Specifications is amended to read:

Reinforcing Bar Number	Total Slip
4	0.010-inch
5	0.010-inch
6	0.010-inch
7	0.014-inch
8	0.014-inch
9	0.014-inch
10	0.018-inch
11	0.018-inch
14	0.024-inch
18	0.030-inch

The subparagraph under the sixth paragraph of Section 52-1.08B(2), "Butt Welded Splices," of the Standard Specifications is amended to read:

- The minimum preheat and interpass temperatures shall be 400º F for Grade 40 bars and 600º F for Grade 60 bars. Immediately after completing the welding, at least 6 inches of the bar on each side of the splice shall be covered by an insulated wrapping to control the rate of cooling. The insulated wrapping shall remain in place until the bar has cooled below 200º F.

The first sentence of the fifth paragraph of Section 52-1.08C, "Service Splice and Ultimate Butt Splice Testing Requirements," of the Standard Specifications is amended to read:

- Prequalification and production sample splices shall be 1) a minimum length of 5 feet for reinforcing bars No. 9 and smaller, and 6.5 feet for reinforcing bars No. 10 and larger, with the splice located at mid-point; and 2) suitably identified before shipment with weatherproof markings that do not interfere with the Engineer's tamper-proof markings or seals.

The second sentence of the second paragraph of Section 52-1.08C(3), "Ultimate Butt Splice Test Criteria," of the Standard Specifications is amended to read:

- Control bars shall be 1) a minimum length of 5 feet for reinforcing bars No. 9 and smaller, and 6.5 feet for reinforcing bars No. 10 and larger, and 2) suitably identified before shipment with weatherproof markings that do not interfere with the Engineer's tamper-proof markings or seals.

SECTION 53: SHOTCRETE

Issue Date: January 5, 2007

The third paragraph in Section 53-1.01, "Description," of the Standard Specifications is amended to read:

- The dry-mix process shall consist of delivering dry mixed aggregate and cementitious material pneumatically or mechanically to the nozzle body and adding water and mixing the materials in the nozzle body. The wet-mix process shall consist of delivering mixed aggregate, cement, and water pneumatically to the nozzle and adding any admixture at the nozzle.

The first through fourth paragraphs in Section 53-1.02, "Materials," of the Standard Specifications is amended to read:

- Cementitious material, fine aggregate, and mixing water shall conform to the provisions in Section 90, "Portland Cement Concrete."
- Shotcrete to be mixed and applied by the dry-mix process shall consist of one part cementitious material to not more than 4.5 parts fine aggregate, thoroughly mixed in a dry state before being charged into the machine. Measurement may be either by volume or by weight. The fine aggregate shall contain not more than 6 percent moisture by weight.
- Shotcrete to be mixed and applied by the wet-mix process shall consist of cementitious material, fine aggregate, and water and shall contain not less than 632 pounds of cementitious material per cubic yard. A maximum of 30 percent pea gravel may be substituted for fine

aggregate. The maximum size of pea gravel shall be such that 100 percent passes the 1/2 inch screen and at least 90 percent passes the 3/8 inch screen.

- Admixtures may be added to shotcrete and shall conform to the provisions in Section 90-4, "Admixtures."

Item C of the third paragraph in Section 53-1.04, "Placing Shotcrete," of the Standard Specifications is amended to read:

C. Aggregate and cementitious material that have been mixed for more than 45 minutes shall not be used unless otherwise permitted by the Engineer.

SECTION 55: STEEL STRUCTURES

Issue Date: January 5, 2007

The CVN impact value for Grade HPS 50W in the table in the fifth paragraph of Section 55-2.01, "Description," of the Standard Specifications is amended to read:

Grade HPS 50W* (4 inches and under in thickness)	20 at 10º F

The first paragraph in Section 55-3.05, "Flatness of Faying and Bearing Surfaces," of the Standard Specifications is amended to read:

- Surfaces of bearing and base plates and other metal surfaces that are to come in contact with each other or with ground concrete surfaces or with asbestos sheet packing shall be flat to within 1/32-inch tolerance in 12 inches and to within 1/16-inch tolerance overall. Surfaces of bearing and base plates and other metal bearing surfaces that are to come in contact with preformed fabric pads, elastomeric bearing pads, or mortar shall be flat to within 1/8-inch tolerance in 12 inches and to within 3/16-inch tolerance overall.

Item B of the first paragraph of Section 55-3.10, "Fastener Threads," of the Standard Specifications is amended to read:

B. Internal threads shall conform to the requirements in ASTM Designation: A 563.

The third paragraph in Section 55-3.19, "Bearings and Anchorages," of the Standard Specifications is amended to read:

- Immediately before setting bearing assemblies or masonry plates directly on ground concrete surfaces, the Contractor shall thoroughly clean the surfaces of the concrete and the metal to be in contact and shall apply a coating of nonsag polysulfide or polyurethane caulking conforming to the requirements in ASTM Designation: C 920 to contact areas to provide full bedding.

The fifth paragraph in Section 55-3.19, "Bearings and Anchorages," of the Standard Specifications is amended to read:

- Mortar to be placed below masonry plates or bearing plates of the bearing assemblies and in anchor bolt sleeves or canisters shall conform to the provisions in Section 51-1.135, "Mortar," except that the proportion of cementitious material to sand shall be 1:3.

Item D of the first paragraph of Section 55-4.01, "Measurement," of the Standard Specifications is amended to read:

D. To determine the pay quantities of galvanized metal, the weight to be added to the calculated weight of the base metal for the galvanizing will be determined from the table of weights of zinc coatings specified in ASTM Designation: A 153/A 153M.

SECTION 56: SIGNS

Issue Date: March 16, 2007

The fifth paragraph in Section 56-1.03, "Fabrication," of the Standard Specifications is amended to read:

- Clips, eyes, or removable brackets shall be affixed to all signs and all posts and shall be used to secure the sign during shipping and for lifting and moving during erection as necessary to prevent damage to the finished galvanized or painted surfaces. Brackets on tubular sign structures shall be removed after erection. Details of the devices shall be shown on the working drawings.

The fourth paragraph of Section 56-1.10, "Payment," of the Standard Specifications is amended to read:

- The contract price paid per pound for install sign structure of the type or types designated in the Engineer's Estimate shall include full compensation for furnishing all labor, materials, tools, equipment and incidentals, and for doing all the work involved in installing sign structures, complete in place, including installing anchor bolt assemblies, removable sign panel frames, and sign panels and performing any welding, painting or galvanizing required during installation, as shown on the plans, as specified in these specifications and the special provisions, and as directed by the Engineer.

The fourth paragraph in Section 56-2.03, "Construction," of the Standard Specifications is amended to read:

- Backfill material for metal posts shall consist of minor concrete conforming to the provisions in Section 90-10, "Minor Concrete," and shall contain not less than 463 pounds of cementitious material per cubic yard.

SECTION 59: PAINTING

Issue Date: May 1, 2006

The third paragraph of Section 59-2.12, "Painting," of the Standard Specifications is amended to read:

- Contact surfaces of stiffeners, railings, built up members or open seam exceeding 6 mils in width that would retain moisture, shall be caulked with polysulfide or polyurethane sealing compound conforming to the requirements in ASTM Designation: C 920, Type S, Grade NS, Class 25, Use O, or other approved material.

The fourth paragraph of Section 59-2.12, "Painting," of the Standard Specifications is amended to read:

- The dry film thickness of the paint will be measured in place with a calibrated Type 2 magnetic film thickness gage in conformance with the requirements in SSPC-PA 2, "Measurement of Dry Coating Thickness with Magnetic Gages," of the "SSPC: The Society for Protective Coatings," except that there shall be no limit to the number or location of spot measurements to verify compliance with specified thickness requirements.

SECTION 64: PLASTIC PIPE

Issue Date: January 5, 2007

The first paragraph of Section 64-1.06, "Concrete Backfill," of the Standard Specifications is amended to read:

- At locations where pipe is to be backfilled with concrete as shown on the plans, the concrete backfill shall be constructed of minor concrete or Class 4 concrete conforming to the provisions in Section 90, "Portland Cement Concrete." Minor concrete shall contain not less than 380 pounds of cementitious material per cubic yard. The concrete to be used will be designated in the contract item or shown on the plans.

SECTION 65: REINFORCED CONCRETE PIPE

Issue Date: January 5, 2007

The first paragraph of Section 65-1.02, "Materials," of the Standard Specifications is amended to read:

- Cementitious material and aggregate shall conform to the provisions in Section 90-2, "Materials" except that mortar strengths relative to Ottawa sand and grading requirements shall not apply to the aggregate. Use of supplemental cementitious material shall conform to AASHTO Designation: M 170.

Subparagraph "c" of the eleventh paragraph of Section 65-1.02A(1) "Circular Reinforced Concrete Pipe (Designated or Selected by Class)," of the Standard Specifications is amended to read:

c. Cementitious material and aggregate for non-reinforced concrete pipe shall conform to the provisions in Section 65-1.02, "Materials."

The first paragraph of Section 65-1.035, "Concrete Backfill," of the Standard Specifications is amended to read:

• At locations where pipe is to be backfilled with concrete as shown on the plans, the concrete backfill shall be constructed of minor concrete or Class 4 concrete in conformance with the provisions in Section 90, "Portland Cement Concrete." Minor concrete shall contain not less than 380 pounds of cementitious material per cubic yard. The concrete to be used will be designated in the contract item.

The first subparagraph of the second paragraph of Section 65-1.06, "Joints," of the Standard Specifications is amended to read:

Cement Mortar.- Mortar shall be composed of one part cementitious material and 2 parts sand by volume. Supplementary cementitious material will not be required.

SECTION 66: CORRUGATED METAL PIPE

Issue Date: January 5, 2007

The first paragraph of Section 66-1.045, "Concrete Backfill," of the Standard Specifications is amended to read:

• At locations where pipe is to be backfilled with concrete as shown on the plans, the concrete backfill shall be constructed of minor concrete or Class 4 concrete conforming to the provisions in Section 90, "Portland Cement Concrete." Minor concrete shall contain not less than 380 pounds of cementitious material per cubic yard. The concrete to be used will be designated in the contract item or shown on the plans.

SECTION 68: SUBSURFACE DRAINS

Issue Date: January 5, 2007

The first and second paragraphs of Section 68-3.02D, "Miscellaneous," of the Standard Specifications are amended to read:

• Concrete for splash pads shall be produced from minor concrete conforming to the provisions in Section 90-10, "Minor Concrete." Minor concrete shall contain not less than 470 pounds of cementitious material per cubic yard.

• Mortar placed where edge drain outlets and vents connect to drainage pipe and existing drainage inlets shall conform to the provisions in Section 51-1.135, "Mortar."

SECTION 70: MISCELLANEOUS FACILITIES

Issue Date: January 5, 2007

The second paragraph of Section 70-1.02C, "Flared End Sections," of the Standard Specifications is amended to read:

• Precast concrete flared end sections shall conform to the requirements for Class III Reinforced Concrete Pipe in AASHTO Designation: M 170M. Cementitious materials and aggregate shall conform to the provisions in Section 90-2, "Materials," except that mortar strengths relative to Ottawa sand and grading requirements shall not apply to the aggregate. Use of supplementary cementitious material shall conform to the requirements in AASHTO Designation: M 170. The area of steel reinforcement per meter of flared end section shall be at least equal to the minimum steel requirements for circular reinforcement in circular pipe for the internal diameter of the circular portion of the flared end section. The basis of acceptance of the precast concrete flared end section shall conform to the requirements of Section 5.1.2 of AASHTO Designation: M 170.

The first paragraph of Section 70-1.02H, "Precast Concrete Structures," of the Standard Specifications is amended to read:

• Precast concrete pipe risers and pipe reducers, and precast concrete pipe sections, adjustment rings and tapered sections for pipe energy dissipators, pipe inlets and pipe manholes shall conform to the requirements in AASHTO Designation: M 199M/M 199, except that the cementitious material and aggregate shall conform to the provisions in Section 90-2, "Materials," except that mortar strengths relative to Ottawa sand and grading requirements shall not apply to the aggregate. Use of supplementary cementitious material shall conform to the requirements in AASHTO Designation: M 170.

The second paragraph of Section 70-1.03, "Installation," of the Standard Specifications is amended to read:

• Cutoff walls for precast concrete flared end sections shall be constructed of minor concrete conforming to the provisions in Section 90-10, "Minor Concrete." Minor concrete shall contain not less than 470 pounds of cementitious material per cubic yard.

SECTION 73: CONCRETE CURBS AND SIDEWALKS

Issue Date: January 5, 2007

The second subparagraph of the second paragraph of Section 73-1.01, "Description," of the Standard Specifications is amended to read:

2. Minor concrete shall contain not less than 463 pounds of cementitious material per cubic yard except that when extruded or slip-formed curbs are constructed using 3/8-inch maximum size aggregate, minor concrete shall contain not less than 548 pounds of cementitious material per cubic yard.

SECTION 75: MISCELLANEOUS METAL

Issue Date: January 5, 2007

The last sentence of the thirteenth paragraph of Section 75-1.03, "Miscellaneous Bridge Metal," of the Standard Specifications is amended to read:

• Thread dimensions for internally threaded concrete anchorage devices shall conform to the requirements in ASTM Designation: A 563.

The twenty-fourth paragraph of Section 75-1.03, "Miscellaneous Bridge Metal," of the Standard Specifications is amended to read:

• Sealing compound, for caulking and adhesive sealing, shall be a polysulfide or polyurethane material conforming to the requirements in ASTM Designation: C 920, Type S, Grade NS, Class 25, Use O.

Item C of the fourth paragraph of Section 75-1.035, "Bridge Joint Restrainer Units," of the Standard Specifications is amended to read:

C. Nuts shall conform to the requirements in ASTM Designation: A 563 including Appendix X1, except lubrication is not required.

The twelfth paragraph in Section 75-1.035, "Bridge Joint Restrainer Units," of the Standard Specifications is amended to read:

• Concrete for filling cable drum units shall conform to the provisions in Section 90-10, "Minor Concrete," or at the option of the Contractor, may be a mix with 3/8-inch maximum size aggregate and not less than 675 pounds of cementitious material per cubic yard.

The sixth paragraph of Section 75-1.05, "Galvanizing," of the Standard Specifications is amended to read:

• Galvanizing of iron and steel hardware and nuts and bolts, when specified or shown on the plans, shall conform to the requirements in ASTM Designation: A 153/A 153M, except whenever threaded studs, bolts, nuts, and washers are specified to conform to the requirements in ASTM Designation: A 307, A 325, A 449, A 563, or F 436 and zinc coating is required, they shall be hot-dip zinc coated or mechanically zinc coated in conformance with the requirements in the ASTM Designations. Unless otherwise specified, galvanizing shall be performed after fabrication.

The eighth paragraph of Section 75-1.05, "Galvanizing," of the Standard Specifications is amended to read:

- Tapping of nuts or other internally threaded parts to be used with zinc coated bolts, anchor bars or studs shall be done after galvanizing and shall conform to the requirements for thread dimensions and overtapping allowances in ASTM Designation: A 563.

SECTION 80: FENCES

Issue Date: January 5, 2007

The fourth paragraph of Section 80-3.01F, "Miscellaneous," of the Standard Specifications is amended to read:

- Portland cement concrete for metal post and brace footings and for deadmen shall be minor concrete conforming to the provisions in Section 90-10, "Minor Concrete." Minor concrete shall contain not less than 470 pounds of cementitious material per cubic yard.

The fourth paragraph of Section 80-4.01C, "Miscellaneous," of the Standard Specifications is amended to read:

- Portland cement concrete for metal post and for deadmen shall be produced from minor concrete conforming to the provisions in Section 90-10, "Minor Concrete." Minor concrete shall contain not less than 470 pounds of cementitious material per cubic yard.

SECTION 83: RAILINGS AND BARRIERS

Issue Date: January 5, 2007

The seventh paragraph in Section 83-1.02, "Materials and Construction," of the Standard Specifications is amended to read:

- Mortar shall conform to the provisions in Section 51-1.135, "Mortar," and shall consist of one part by volume of cementitious material and 3 parts of clean sand.

Item b of the first paragraph in Section 83-2.02D(2), "Materials," of the Standard Specifications is amended to read:

b. If the 3/8-inch maximum size aggregate grading is used to construct extruded or slip-formed concrete barriers, the cementitious material content of the minor concrete shall be not less than 675 pounds per cubic yard.

The third paragraph in Section 83-2.02D(2), "Materials," of the Standard Specifications is amended to read:

- The concrete paving between the tops of the 2 walls of concrete barrier (Types 50E, 60E, 60GE, and 60SE) and the optional concrete slab at the base between the 2 walls of concrete barrier (Types 50E, 60E, 60GE, and 60SE) shall be constructed of minor concrete conforming to the provisions of Section 90-10, "Minor Concrete," except that the minor concrete shall contain not less than 505 pounds of cementitious material per cubic yard.

SECTION 86: SIGNALS, LIGHTING AND ELECTRICAL SYSTEMS

Issue Date: January 5, 2007

The fourth paragraph in Section 86-2.03, "Foundations," of the Standard Specifications is amended to read:

- After each post, standard, and pedestal on structures is in proper position, mortar shall be placed under the base plate as shown on the plans. The exposed portions shall be formed to present a neat appearance. Mortar shall conform to Section 51-1.135, "Mortar," except the mortar shall consist of one part by volume of cementitious material and 3 parts of clean sand and shall contain only sufficient moisture to permit packing. Mortar shall be cured by keeping it damp for 3 days.

Item D of the eighteenth paragraph in Section 86-2.05C, "Installation," of the Standard Specifications is amended to read:

D. The conduit shall be placed in the bottom of the trench, and the trench shall be backfilled with minor concrete conforming to the provisions in Section 90-10, "Minor Concrete." Minor concrete shall contain not less than 590 pounds of cementitious material per cubic yard. Concrete backfill shall be placed to the pavement surface except, when the trench is in asphalt concrete pavement and additional pavement is not being placed, the top 0.10 foot of the trench shall be backfilled with asphalt concrete produced from commercial quality paving asphalt and aggregates.

Item C of the twenty-third paragraph in Section 86-2.05C, "Installation," of the Standard Specifications is amended to read:

C. Precast concrete conduit cradles shall conform to the dimensions shown on the plans and shall be constructed of minor concrete and commercial quality welded wire fabric. Minor concrete shall conform to the provisions in Section 90-10, "Minor Concrete," and shall contain not less than 590 pounds of cementitious material per cubic yard. The cradles shall be moist cured for not less than 3 days.

Item G of the twenty-third paragraph in Section 86-2.05C, "Installation," of the Standard Specifications is amended to read:

G. The space around conduits through bridge abutment walls shall be filled with mortar conforming to the provisions in Section 51-1.135, "Mortar," except that the proportion of cementitious material to sand shall be one to 3.

The fifth paragraph in Section 86-2.07, "Traffic Pull Boxes," of the Standard Specifications is amended to read:

- Concrete placed around and under traffic pull boxes as shown on the plans shall be minor concrete conforming to the provisions in Section 90-10, "Minor Concrete."

The traffic signal controller cabinet requirement in the table in Section 86-2.08A, "Conductor Identification," of the Standard Specifications is amended to read:

Traffic Signal Controller Cabinet	Ungrounded Circuit Conductor	Blk	None	CON-1	6
	Grounded Circuit Conductor	Wht	None	CON-2	6

The first sentence of the first paragraph of Section 86-4.06, "Pedestrian Signal Faces," of the Standard Specifications is amended to read:

- Message symbols for pedestrian signal faces shall be white WALKING PERSON and Portland orange UPRAISED HAND conforming to the requirements in the Institute of Transportation Engineers Standards: "Pedestrian Traffic Control Signal Indications" and the "California MUTCD."

The second sentence of the tenth paragraph of Section 86-4.07, "Light Emitting Diode Pedestrian Signal Face 'Upraised Hand' Module," of the Standard Specifications is amended to read:

- The color of "UPRAISED HAND" shall be Portland orange conforming to the requirements of the Institute of Transportation Engineers Standards: "Pedestrian Traffic Control Signal Indications" and the "California MUTCD."

The first paragraph in Section 86-5.01D, "Removing or Abandoning Existing Pressure-Sensitive Detectors," of the Standard Specifications is amended to read:

- When a foundation for a pressure-sensitive vehicle detector is to be removed, the hole left by removing the detector frame and foundation shall be filled with minor concrete, except the roadway surface shall be reconstructed with material to match existing surfacing. Minor concrete shall conform to the provisions in Section 90-10, "Minor Concrete," except that the concrete shall contain not less than 420 pounds of cementitious material per cubic yard for asphalt concrete surfaced roadways and not less than 590 pounds of cementitious material per cubic yard for portland cement concrete surfaced roadways.

The first paragraph of Section 86-8.01, "Payment," of the Standard Specifications is amended to read:

- The contract lump sum price or prices paid for signal, ramp metering, flashing beacon, lighting, sign illumination, traffic monitoring station, highway advisory radio systems, closed circuit television systems, or combinations thereof; for modifying or removing those systems; for temporary systems; or the lump sum or unit prices paid for various units of those systems; or the

lump sum or per foot price paid for conduit of the various sizes, types and installation methods listed in the Engineer's Estimate shall include full compensation for furnishing all labor, materials, tools, equipment and incidentals, and for doing all the work involved in furnishing and installing, modifying, or removing the systems, combinations or units thereof, as shown on the plans, as specified in these specifications and the special provisions, and as directed by the Engineer, including any necessary pull boxes (except when the type required is shown as a separate contract item); excavation and backfill; concrete foundations (except when shown as a separate contract item); pedestrian barricades; furnishing and installing illuminated street name signs; installing sign panels on pedestrian barricades, on flashing beacon standards, and on traffic signal mast arms; restoring sidewalk, pavement and appurtenances damaged or destroyed during construction; salvaging existing materials; and making all required tests.

SECTION 90: PORTLAND CEMENT CONCRETE

Issue Date: January 5, 2007

Section 90, "Portland Cement Concrete," of the Standard Specifications is amended to read:

SECTION 90: PORTLAND CEMENT CONCRETE

90-1 GENERAL

90-1.01 DESCRIPTION

- Portland cement concrete shall be composed of cementitious material, fine aggregate, coarse aggregate, admixtures if used, and water, proportioned and mixed as specified in these specifications.
- The Contractor shall determine the mix proportions for concrete in conformance with these specifications.
- Class 1 concrete shall contain not less than 675 pounds of cementitious material per cubic yard.
- Class 2 concrete shall contain not less than 590 pounds of cementitious material per cubic yard.
- Class 3 concrete shall contain not less than 505 pounds of cementitious material per cubic yard.
- Class 4 concrete shall contain not less than 420 pounds of cementitious material per cubic yard.
- Minor concrete shall contain not less than 550 pounds of cementitious material per cubic yard unless otherwise specified in these specifications or the special provisions.
- Unless otherwise designated on the plans or specified in these specifications or the special provisions, the amount of cementitious material used per cubic yard of concrete in structures or portions of structures shall conform to the following:

Use	Cementitious Material Content (Pounds/CY)
Concrete designated by compressive strength:	
Deck slabs and slab spans of bridges	675 min., 800 max.
Roof sections of exposed top box culverts	675 min., 800 max.
Other portions of structures	590 min., 800 max.
Concrete not designated by compressive strength:	
Deck slabs and slab spans of bridges	675 min.
Roof sections of exposed top box culverts	675 min.
Prestressed members	675 min.
Seal courses	675 min.
Other portions of structures	590 min.
Concrete for precast members	590 min., 925 max.

• Whenever the 28-day compressive strength shown on the plans is greater than 3,600 pounds per square inch, the concrete shall be designated by compressive strength. If the plans show a 28-day compressive strength that is 4,000 pounds per square inch or greater, an additional 14 days will be allowed to obtain the specified strength. The 28-day compressive strengths shown on the plans that are 3,600 pounds per square inch or less are shown for design information only and are not a requirement for acceptance of the concrete.

• Concrete designated by compressive strength shall be proportioned such that the concrete will attain the strength shown on the plans or specified in the special provisions.

• Before using concrete for which the mix proportions have been determined by the Contractor, or in advance of revising those mix proportions, the Contractor shall submit in writing to the Engineer a copy of the mix design.

• Compliance with cementitious material content requirements will be verified in conformance with procedures described in California Test 518 for cement content. For testing purposes, supplementary cementitious material shall be considered to be cement. Batch proportions shall be adjusted as necessary to produce concrete having the specified cementitious material content.

• If any concrete has a cementitious material, portland cement, or supplementary cementitious material content that is less than the minimum required, the concrete shall be removed. However, if the Engineer determines that the concrete is structurally adequate, the concrete may remain in place and the Contractor shall pay to the State $0.25 for each pound of cementitious material, portland cement, or supplementary cementitious material that is less than the minimum required. The Department may deduct the amount from any moneys due, or that may become due, the Contractor under the contract. The deductions will not be made unless the difference between the contents required and those actually provided exceeds the batching tolerances permitted by Section 90-5, "Proportioning." No deductions will be made based on the results of California Test 518.

• The requirements of the preceding paragraph shall not apply to minor concrete or commercial quality concrete.

90-2 MATERIALS

90-2.01 CEMENTITIOUS MATERIALS

• Unless otherwise specified, cementitious material shall be either a combination of Type II or Type V portland cement and a supplementary cementitious material, or a blended cement.

• Cementitious materials used in cast-in-place concrete for exposed surfaces of like elements of a structure shall be from the same sources and of the same proportions.

• Cementitious materials shall be protected from moisture until used. Sacked cementitious materials shall be piled to permit access for tallying, inspecting, and identifying each shipment.

• Facilities shall be provided to ensure that cementitious materials meeting this Section 90-2.01 are kept separate from other cementitious materials. Sampling cementitious materials shall be in conformance with California Test 125.

• The Contractor shall furnish a Certificate of Compliance for cementious materials in conformance with the provisions in Section 6-1.07, "Certificates of Compliance." The Certificate of Compliance shall indicate the source by name and location (including country, state, and city). If cementitious material is delivered directly to the job site, the Certificate of Compliance shall be signed by the cementitious material supplier. If the cementitious material is used in ready-mixed concrete or in precast concrete products purchased as such by the Contractor, the Certificate of Compliance shall be signed by the manufacturer of the concrete or product.

90-2.01A CEMENT

• Portland cement shall conform to the requirements in ASTM Designation: C 150 except, using a 10-sample moving average, limestone shall not exceed 2.5 percent. The C_3S content of Type II cement shall not exceed 65 percent.

• Blended cement shall conform to the requirements for Portland Blast-Furnace Slag, Cement Type IS (MS) or Portland-Pozzolan Cement, Type IP (MS) in AASHTO Designation: M 240 and shall be comprised of an intimate and uniform blend of Type II or Type V cement and supplementary cementitious material in an amount conforming to the requirements in Section 90-2.01C, "Required Use of Supplementary Cementitious Materials."

• In addition, blended cement, Type II portland cement, and Type V portland cement shall conform to the following requirements:

A. The cement shall not contain more than 0.60-percent by mass of alkalies, calculated as the percentage of Na_2O plus 0.658 times the percentage of K_2O, when determined by methods as required in AASHTO Designation: T 105;
B. The autoclave expansion shall not exceed 0.50-percent; and
C. Mortar, containing the cement to be used and Ottawa sand, when tested in conformance with California Test 527, shall not expand in water more than 0.010-percent and shall not contract in air more than 0.048-percent, except that when cement is to be used for precast prestressed concrete piling, precast prestressed concrete members, or steam cured concrete products, the mortar shall not contract in air more than 0.053-percent.

• Type III portland cement shall be used only as specified in the special provisions or with the approval of the Engineer. Type III portland cement shall conform to the additional requirements listed above for Type II portland cement, except when tested in conformance with California Test 527, mortar containing Type III portland cement shall not contract in air more than 0.075-percent.

90-2.01B SUPPLEMENTARY CEMENTITIOUS MATERIALS (SCM)

• Fly ash shall conform to the requirements in AASHTO Designation: M 295, Class F, and the following:

A. Calcium oxide content shall not exceed 10 percent.
B. The available alkali, as sodium oxide equivalent, shall not exceed 1.5 percent when determined in conformance with the requirements in ASTM Designation: C 311 or the total alkali, as sodium oxide equivalent, shall not exceed 5.0 percent when determined in conformance with the requirements in AASHTO Designation: T 105.
C. Commingling of fly ash from different sources at uncontrolled ratios is permissible only if the following criteria are satisfied:

    1. Sources of fly ash to be commingled shall be on the approved list of materials for use in concrete.
    2. Testing of the commingled product is the responsibility of the fly ash supplier.
    3. Each fly ash's running average of density shall not differ from any other by more than 0.01-pound per cubic inch at the time of commingling.
    4. Each fly ash's running average of loss on ignition shall not differ from any other by more than one percent at the time of commingling.
    5. The final product of commingled fly ash shall conform to the requirement in AASHTO Designation: M 295.

• Raw or calcined natural pozzolans shall conform to the requirements in AASHTO Designation: M 295, Class N and the following requirements:

A. Calcium oxide content shall not exceed 10 percent.
B. The available alkali, as sodium oxide equivalent, shall not exceed 1.5 percent when determined in conformance with the requirements in ASTM Designation: C 311 or the total alkali, as sodium oxide equivalent, shall not exceed 5.0 percent when determined in conformance with the requirements in AASHTO Designation: T 105.

• Ground Granulated Blast Furnace Slag (GGBFS) shall conform to the requirements in AASHTO Designation: M 302, Grade 100 or Grade 120.

• Silica Fume shall conform to the requirements of AASHTO Designation: M 307, with reduction in mortar expansion of 80 percent, minimum, using the cement from the proposed mix design.

90-2.01C REQUIRED USE OF SUPPLEMENTARY CEMENTITIOUS MATERIALS

• The amount of portland cement and SCM used in portland cement concrete shall conform to the minimum cementitious material content provisions in Section 90-1.01, "Description," or Section 90-4.05, "Optional Use of Chemical Admixtures," and the following:

A. If a blended cement conforming to the provisions in Section 90-2.01A, "Cement," is used, the minimum amount of SCM incorporated into the cement shall conform to the provisions in this Section 90-2.01C.

B. Fly ash or natural pozzolan, silica fume, or GGBFS shall not be used with Type IP or Type IS cements.

- Use of SCMs shall conform to the following:

A. If fly ash or natural pozzolan is used:

1. The minimum amount of portland cement shall not be less than 75 percent by weight of the specified minimum cementitious material content.
2. The minimum amount of fly ash or natural pozzolan shall be:
   a. Fifteen percent by weight of the total amount of cementitious material if the calcium oxide content of fly ash or natural pozzolan is equal to or less than 2 percent by weight;
   b. Twenty-five percent by weight of the total amount of cementitious material if the calcium oxide content of fly ash or natural pozzolan is greater than 2 percent by weight.

3. The total amount of fly ash or natural pozzolan shall not exceed 35 percent by weight of the total amount of cementitious material to be used in the mix. If Section 90-1.01, "Description," specifies a maximum cementitious material content in pounds per cubic yard, the total weight of portland cement and fly ash or natural pozzolan per cubic yard shall not exceed the specified maximum cementitious material content.

B. If silica fume is used:

1. The amount of silica fume shall not be less than 10 percent by weight of the total amount of cementitious material.
2. The amount of portland cement shall not be less than 75 percent by weight of the specified minimum cementitious material content.
3. If Section 90-1.01, "Description," specifies a maximum cementitious material content in pounds per cubic yard, the total weight of portland cement and silica fume per cubic yard shall not exceed the specified maximum cementitious material content.

C. If GGBFS is used:

1. The minimum amount of GGBFS shall be either:
   a. Forty percent of the total cementitious material to be used, if the aggregates used in the concrete are on the Department's list of "Approved Aggregates For Use in Concrete with Reduced Fly Ash."
   b. No less than 50 percent.

2. The amount of GGBFS shall not exceed 60 percent by weight of the total amount of cementitious materials to be used.

90-2.02 AGGREGATES

- Aggregates shall be free from deleterious coatings, clay balls, roots, bark, sticks, rags, and other extraneous material.
- The Contractor shall provide safe and suitable facilities, including necessary splitting devices for obtaining samples of aggregates, in conformance with California Test 125.
- Aggregates shall be of such character that it will be possible to produce workable concrete within the limits of water content provided in Section 90-6.06, "Amount of Water and Penetration."
- Aggregates shall have not more than 10 percent loss when tested for soundness in conformance with the requirements in California Test 214. The soundness requirement for fine aggregate will be waived, provided that the durability index, D_f, of the fine aggregate is 60 or greater when tested for durability in conformance with California Test 229.
- If the results of any one or more of the Cleanness Value, Sand Equivalent, or aggregate grading tests do not meet the requirements specified for "Operating Range" but all meet the "Contract Compliance" requirements, the placement of concrete shall be suspended at the completion of the current pour until tests or other information indicate that the next material to be used in the work will comply with the requirements specified for "Operating Range."
- If the results of either or both the Cleanness Value and coarse aggregate grading tests do not meet the requirements specified for "Contract Compliance," the concrete that is represented by the tests shall be removed. However, if the Engineer determines that the concrete is structurally adequate, the concrete may remain in place, and the Contractor shall pay to the State $3.50 per cubic yard for paving concrete and $5.50 per cubic yard for all other concrete for the concrete represented by these tests and left in place. The Department may deduct the amount from any moneys due, or that may become due, the Contractor under the contract.
- If the results of either or both the Sand Equivalent and fine aggregate grading tests do not meet the requirements specified for "Contract Compliance," the concrete which is represented by the tests shall be removed. However, if the Engineer determines that the concrete is structurally adequate, the concrete may remain in place, and the Contractor shall pay to the State $3.50 per cubic yard for paving concrete and $5.50 per cubic yard for all other concrete for the concrete represented by these tests and left in place. The Department may deduct the amount from any moneys due, or that may become due, the Contractor under the contract.
- The 2 preceding paragraphs apply individually to the "Contract Compliance" requirements for coarse aggregate and fine aggregate. When both coarse aggregate and fine aggregate do not conform to the "Contract Compliance" requirements, both paragraphs shall apply. The payments specified in those paragraphs are in addition to any payments made in conformance with the provisions in Section 90-1.01, "Description."
- No single Cleanness Value, Sand Equivalent, or aggregate grading test shall represent more than 300 cubic yards of concrete or one day's pour, whichever is smaller.
- When the source of an aggregate is changed, the Contractor shall adjust the mix proportions and submit in writing to the Engineer a copy of the mix design before using the aggregates.

90-2.02A COARSE AGGREGATE

- Coarse aggregate shall consist of gravel, crushed gravel, crushed rock, reclaimed aggregate, crushed air-cooled iron blast furnace slag or combinations thereof. Crushed air-cooled blast furnace slag shall not be used in reinforced or prestressed concrete.

• Reclaimed aggregate is aggregate that has been recovered from plastic concrete by washing away the cementitious material. Reclaimed aggregate shall conform to all aggregate requirements.

• Coarse aggregate shall conform to the following quality requirements:

Tests	California Test	Requirements
Loss in Los Angeles Rattler (after 500 revolutions)	211	45% max.
Cleanness Value		
Operating Range	227	75 min.
Contract Compliance	227	71 min.

• In lieu of the above Cleanness Value requirements, a Cleanness Value "Operating Range" limit of 71, minimum, and a Cleanness Value "Contract Compliance" limit of 68, minimum, will be used to determine the acceptability of the coarse aggregate if the Contractor furnishes a Certificate of Compliance, as provided in Section 6-1.07, "Certificates of Compliance," certifying that:

A. Coarse aggregate sampled at the completion of processing at the aggregate production plant had a Cleanness Value of not less than 82 when tested in conformance with the requirements in California Test 227; and
B. Prequalification tests performed in conformance with the requirements in California Test 549 indicated that the aggregate would develop a relative strength of not less than 95 percent and would have a relative shrinkage not greater than 105 percent, based on concrete.

90-2.02B FINE AGGREGATE

• Fine aggregate shall consist of natural sand, manufactured sand produced from larger aggregate or a combination thereof. Manufactured sand shall be well graded.

• Fine aggregate shall conform to the following quality requirements:

Test	California Test	Requirements
Organic Impurities	213	Satisfactory[a]
Mortar Strengths Relative to Ottawa Sand	515	95%, min.
Sand Equivalent:		
Operating Range	217	75, min.
Contract Compliance	217	71, min.

a Fine aggregate developing a color darker than the reference standard color solution may be accepted if it is determined by the Engineer, from mortar strength tests, that a darker color is acceptable.

• In lieu of the above Sand Equivalent requirements, a Sand Equivalent "Operating Range" limit of 71, minimum, and a Sand Equivalent "Contract Compliance" limit of 68, minimum, will be used to determine the acceptability of the fine aggregate if the Contractor furnishes a Certificate of Compliance, as provided in Section 6-1.07, "Certificates of Compliance," certifying that:

A. Fine aggregate sampled at the completion of processing at the aggregate production plant had a Sand Equivalent value of not less than 82 when tested by California Test 217; and
B. Prequalification tests performed in conformance with California Test 549 indicated that the aggregate would develop a relative strength of not less than 95 percent and would have a relative shrinkage not greater than 105 percent, based on concrete.

90-2.03 WATER

• In conventionally reinforced concrete work, the water for curing, for washing aggregates, and for mixing shall be free from oil and shall not contain more than 1,000 parts per million of chlorides as Cl, when tested in conformance with California Test 422, nor more than 1,300 parts per million of sulfates as SO_4, when tested in conformance with California Test 417. In prestressed concrete work, the water for curing, for washing aggregates, and for mixing shall be free from oil and shall not contain more than 650 parts per million of chlorides as Cl, when tested in conformance with California Test 422, nor more than 1,300 parts per million of sulfates as SO_4, when tested in conformance with California Test 417. In no case shall the water contain an amount of impurities that will cause either: 1) a change in the setting time of cement of more than 25 percent when tested in conformance with the requirements in ASTM Designation: C 191 or ASTM Designation: C 266 or 2) a reduction in the compressive strength of mortar at 14 days of more than 5 percent, when tested in conformance with the requirements in ASTM Designation: C 109, when compared to the results obtained with distilled water or deionized water, tested in conformance with the requirements in ASTM Designation: C 109.

• In nonreinforced concrete work, the water for curing, for washing aggregates and for mixing shall be free from oil and shall not contain more than 2,000 parts per million of chlorides as Cl, when tested in conformance with California Test 422, or more than 1,500 parts per million of sulfates as SO_4, when tested in conformance with California Test 417.

• In addition to the above provisions, water for curing concrete shall not contain impurities in a sufficient amount to cause discoloration of the concrete or produce etching of the surface.

• Water reclaimed from mixer wash-out operations may be used in mixing concrete. The water shall not contain coloring agents or more than 300 parts per million of alkalis (Na_2O + 0.658 K_2O) as determined on the filtrate. The specific gravity of the water shall not exceed 1.03 and shall not vary more than ±0.010 during a day's operations.

90-2.04 ADMIXTURE MATERIALS

• Admixture materials shall conform to the requirements in the following ASTM Designations:

A. Chemical Admixtures—ASTM Designation: C 494.
B. Air-entraining Admixtures—ASTM Designation: C 260.

90-3 AGGREGATE GRADINGS

90-3.01 GENERAL

• Before beginning concrete work, the Contractor shall submit in writing to the Engineer the gradation of the primary aggregate nominal sizes that the Contractor proposes to furnish. If a primary coarse aggregate or the fine aggregate is separated into 2 or more sizes, the proposed gradation shall consist of the gradation for each individual size, and the proposed proportions of each individual size, combined mathematically to indicate one proposed gradation. The

proposed gradation shall meet the grading requirements shown in the table in this section, and shall show the percentage passing each of the sieve sizes used in determining the end result.

• The Engineer may waive, in writing, the gradation requirements in this Section 90-3.01 and in Sections 90-3.02, "Coarse Aggregate Grading," 90-3.03, "Fine Aggregate Grading," and 90-3.04, "Combined Aggregate Gradings," if, in the Engineer's opinion, furnishing the gradation is not necessary for the type or amount of concrete work to be constructed.

• Gradations proposed by the Contractor shall be within the following percentage passing limits:

Primary Aggregate Nominal Size	Sieve Size	Limits of Proposed Gradation
1 1/2" x 3/4"	1"	19 - 41
1" x No. 4	3/4"	52 - 85
1" x No. 4	3/8"	15 - 38
1/2" x No. 4	3/8"	40 - 78
3/8" x No. 8	3/8"	50 - 85
Fine Aggregate	No. 16	55 - 75
Fine Aggregate	No. 30	34 - 46
Fine Aggregate	No. 50	16 - 29

• Should the Contractor change the source of supply, the Contractor shall submit in writing to the Engineer the new gradations before their intended use.

90-3.02 COARSE AGGREGATE GRADING

• The grading requirements for coarse aggregates are shown in the following table for each size of coarse aggregate:

	Percentage Passing Primary Aggregate Nominal Sizes							
	1 1/2" x 3/4"		1" x No. 4		1/2" x No. 4		3/8" x No. 8	
Sieve Sizes	Operating Range	Contract Compliance	Operating Range	Contract Compliance	Operating Range	Contract Compliance	Operating Range	Contract Compliance
2"	100	100	—	—	—	—	—	—
1 1/2"	88 - 100	85 - 100	100	100	—	—	—	—
1"	X ±18	X ±25	88 - 100	86 - 100	—	—	—	—
3/4"	0 - 17	0 - 20	X ±15	X ±22	100	100	—	—
1/2"	—	—	—	—	82 - 100	80 - 100	100	100
3/8"	0 - 7	0 - 9	X ±15	X ±22	X ±15	X ±22	X ±15	X ±20
No. 4	—	—	0 - 16	0 - 18	0 - 15	0 - 18	0 - 25	0 - 28
No. 8	—	—	0 - 6	0 - 7	0 - 6	0 - 7	0 - 6	0 - 7

• In the above table, the symbol X is the gradation that the Contractor proposes to furnish for the specific sieve size as provided in Section 90-3.01, "General."

• Coarse aggregate for the 1 1/2 inch, maximum, combined aggregate grading as provided in Section 90-3.04, "Combined Aggregate Gradings," shall be furnished in 2 or more primary aggregate nominal sizes. Each primary aggregate nominal size may be separated into 2 sizes and stored separately, provided that the combined material conforms to the grading requirements for that particular primary aggregate nominal size.

• When the one inch, maximum, combined aggregate grading as provided in Section 90-3.04, "Combined Aggregate Gradings," is to be used, the coarse aggregate may be separated into 2 sizes and stored separately, provided that the combined material shall conform to the grading requirements for the 1" x No. 4 primary aggregate nominal size.

90-3.03 FINE AGGREGATE GRADING

• Fine aggregate shall be graded within the following limits:

Sieve Sizes	Percentage Passing	
	Operating Range	Contract Compliance
3/8"	100	100
No. 4	95 - 100	93 - 100
No. 8	65 - 95	61 - 99
No. 16	X ±10	X ±13
No. 30	X ±9	X ±12
No. 50	X ±6	X ±9
No. 100	2 - 12	1 - 15
No. 200	0 - 8	0 - 10

• In the above table, the symbol X is the gradation that the Contractor proposes to furnish for the specific sieve size as provided in Section 90-3.01, "General."

• In addition to the above required grading analysis, the distribution of the fine aggregate sizes shall be such that the difference between the total percentage passing the No. 16 sieve and the total percentage passing the No. 30 sieve shall be between 10 and 40, and the difference between the percentage passing the No. 30 and No. 50 sieves shall be between 10 and 40.

• Fine aggregate may be separated into 2 or more sizes and stored separately, provided that the combined material conforms to the grading requirements specified in this Section 90-3.03.

90-3.04 COMBINED AGGREGATE GRADINGS

• Combined aggregate grading limits shall be used only for the design of concrete mixes. Concrete mixes shall be designed so that aggregates are combined in proportions that shall produce a mixture within the grading limits for combined aggregates as specified herein.

• The combined aggregate grading, except when otherwise specified in these specifications or the special provisions, shall be either the 1 1/2 inch, maximum grading, or the 1 inch, maximum grading, at the option of the Contractor.

Grading Limits of Combined Aggregates

	Percentage Passing			
Sieve Sizes	1 1/2" Max.	1" Max.	1/2" Max.	3/8" Max.
2"	100	—	—	—
1 1/2"	90 - 100	100	—	—
1"	50 - 86	90 - 100	—	—
3/4"	45 - 75	55 - 100	100	—
1/2"	—	—	90 - 100	100
3/8"	38 - 55	45 - 75	55 - 86	50 - 100
No. 4	30 - 45	35 - 60	45 - 63	45 - 63
No. 8	23 - 38	27 - 45	35 - 49	35 - 49
No. 16	17 - 33	20 - 35	25 - 37	25 - 37
No. 30	10 - 22	12 - 25	15 - 25	15 - 25
No. 50	4 - 10	5 - 15	5 - 15	5 - 15
No. 100	1 - 6	1 - 8	1 - 8	1 - 8
No. 200	0 - 3	0 - 4	0 - 4	0 - 4

- Changes from one grading to another shall not be made during the progress of the work unless permitted by the Engineer.

90-4 ADMIXTURES

90-4.01 GENERAL

- Admixtures used in portland cement concrete shall conform to and be used in conformance with the provisions in this Section 90-4 and the special provisions. Admixtures shall be used when specified or ordered by the Engineer and may be used at the Contractor's option as provided herein.
- Chemical admixtures and air-entraining admixtures containing chlorides as Cl in excess of one percent by weight of admixture, as determined by California Test 415, shall not be used.
- Admixtures shall be uniform in properties throughout their use in the work. Should it be found that an admixture as furnished is not uniform in properties, its use shall be discontinued.
- If more than one admixture is used, the admixtures shall be compatible with each other so that the desirable effects of all admixtures used will be realized.
- Chemical admixtures shall be used in conformance with the manufacturer's written recommendations.

90-4.02 MATERIALS

- Admixture materials shall conform to the provisions in Section 90–2.04, "Admixture Materials."

90-4.03 ADMIXTURE APPROVAL

- No admixture brand shall be used in the work unless it is on the Department's current list of approved brands for the type of admixture involved.
- Admixture brands will be considered for addition to the approved list if the manufacturer of the admixture submits to the Transportation Laboratory a sample of the admixture accompanied by certified test results demonstrating that the admixture complies with the requirements in the appropriate ASTM Designation and these specifications. The sample shall be sufficient to permit performance of all required tests. Approval of admixture brands will be

dependent upon a determination as to compliance with the requirements, based on the certified test results submitted, together with tests the Department may elect to perform.

• If the Contractor proposes to use an admixture of a brand and type on the current list of approved admixture brands, the Contractor shall furnish a Certificate of Compliance from the manufacturer, as provided in Section 6-1.07, "Certificates of Compliance," certifying that the admixture furnished is the same as that previously approved. If a previously approved admixture is not accompanied by a Certificate of Compliance, the admixture shall not be used in the work until the Engineer has had sufficient time to make the appropriate tests and has approved the admixture for use. The Engineer may take samples for testing at any time, whether or not the admixture has been accompanied by a Certificate of Compliance.

90-4.04 REQUIRED USE OF CHEMICAL ADMIXTURES

• If the use of a chemical admixture is specified, the admixture shall be used at the dosage specified, except that if no dosage is specified, the admixture shall be used at the dosage normally recommended by the manufacturer of the admixture.

90-4.05 OPTIONAL USE OF CHEMICAL ADMIXTURES

• The Contractor may use Type A or F, water-reducing; Type B, retarding; or Type D or G, water-reducing and retarding admixtures as described in ASTM Designation: C 494 to conserve cementitious material or to facilitate any concrete construction application subject to the following conditions:

A. If a water-reducing admixture or a water-reducing and retarding admixture is used, the cementitious material content specified or ordered may be reduced by a maximum of 5 percent by weight, except that the resultant cementitious material content shall be not less than 505 pounds per cubic yard; and
B. When a reduction in cementitious material content is made, the dosage of admixture used shall be the dosage used in determining approval of the admixture.

• Unless otherwise specified, a Type C accelerating chemical admixture conforming to the requirements in ASTM Designation: C 494, may be used in portland cement concrete. Inclusion in the mix design submitted for approval will not be required provided that the admixture is added to counteract changing conditions that contribute to delayed setting of the portland cement concrete, and the use or change in dosage of the admixture is approved in writing by the Engineer.

90-4.06 REQUIRED USE OF AIR-ENTRAINING ADMIXTURES

• When air-entrainment is specified or ordered by the Engineer, the air-entraining admixture shall be used in amounts to produce a concrete having the specified air content as determined by California Test 504.

90-4.07 OPTIONAL USE OF AIR-ENTRAINING ADMIXTURES

• When air-entrainment has not been specified or ordered by the Engineer, the Contractor will be permitted to use an air-entraining admixture to facilitate the use of any construction procedure or equipment provided that the average air content, as determined by California Test 504, of 3 successive tests does not exceed 4 percent, and no single test value exceeds

5.5 percent. If the Contractor elects to use an air-entraining admixture in concrete for pavement, the Contractor shall so indicate at the time the Contractor designates the source of aggregate.

90-4.08 BLANK

90-4.09 BLANK

90-4.10 PROPORTIONING AND DISPENSING LIQUID ADMIXTURES

- Chemical admixtures and air-entraining admixtures shall be dispensed in liquid form. Dispensers for liquid admixtures shall have sufficient capacity to measure at one time the prescribed quantity required for each batch of concrete. Each dispenser shall include a graduated measuring unit into which liquid admixtures are measured to within ±5 percent of the prescribed quantity for each batch. Dispensers shall be located and maintained so that the graduations can be accurately read from the point at which proportioning operations are controlled to permit a visual check of batching accuracy prior to discharge. Each measuring unit shall be clearly marked for the type and quantity of admixture.
- Each liquid admixture dispensing system shall be equipped with a sampling device consisting of a valve located in a safe and readily accessible position such that a sample of the admixture may be withdrawn slowly by the Engineer.
- If more than one liquid admixture is used in the concrete mix, each liquid admixture shall have a separate measuring unit and shall be dispensed by injecting equipment located in such a manner that the admixtures are not mixed at high concentrations and do not interfere with the effectiveness of each other. When air-entraining admixtures are used in conjunction with other liquid admixtures, the air-entraining admixture shall be the first to be incorporated into the mix, unless it is demonstrated that a different sequence improves performance.
- When automatic proportioning devices are required for concrete pavement, dispensers for liquid admixtures shall operate automatically with the batching control equipment. The dispensers shall be equipped with an automatic warning system in good operating condition that will provide a visible or audible signal at the point at which proportioning operations are controlled when the quantity of admixture measured for each batch of concrete varies from the preselected dosage by more than 5 percent, or when the entire contents of the measuring unit are not emptied from the dispenser into each batch of concrete.
- Unless liquid admixtures are added to premeasured water for the batch, their discharge into the batch shall be arranged to flow into the stream of water so that the admixtures are well dispersed throughout the batch, except that air-entraining admixtures may be dispensed directly into moist sand in the batching bins provided that adequate control of the air content of the concrete can be maintained.
- Liquid admixtures requiring dosages greater than one-half gallon per cubic yard shall be considered to be water when determining the total amount of free water as specified in Section 90-6.06, "Amount of Water and Penetration."

90-4.11 BLANK

90-5 PROPORTIONING

90-5.01 STORAGE OF AGGREGATES

• Aggregates shall be stored or stockpiled in such a manner that separation of coarse and fine particles of each size shall be avoided and the various sizes shall not become intermixed before proportioning.

• Aggregates shall be stored or stockpiled and handled in a manner that prevent contamination by foreign materials. In addition, storage of aggregates at batching or mixing facilities that are erected subsequent to the award of the contract and that furnish concrete to the project shall conform to the following:

A. Intermingling of the different sizes of aggregates shall be positively prevented. The Contractor shall take the necessary measures to prevent intermingling. The preventive measures may include, but are not necessarily limited to, physical separation of stockpiles or construction of bulkheads of adequate length and height; and

B. Contamination of aggregates by contact with the ground shall be positively prevented. The Contractor shall take the necessary measures to prevent contamination. The preventive measures shall include, but are not necessarily limited to, placing aggregates on wooden platforms or on hardened surfaces consisting of portland cement concrete, asphalt concrete, or cement treated material.

• In placing aggregates in storage or in moving the aggregates from storage to the weigh hopper of the batching plant, any method that may cause segregation, degradation, or the combining of materials of different gradings that will result in any size of aggregate at the weigh hopper failing to meet the grading requirements, shall be discontinued. Any method of handling aggregates that results in excessive breakage of particles shall be discontinued. The use of suitable devices to reduce impact of falling aggregates may be required by the Engineer.

90-5.02 PROPORTIONING DEVICES

• Weighing, measuring, or metering devices used for proportioning materials shall conform to the requirements in Section 9-1.01, "Measurement of Quantities," and this Section 90-5.02. In addition, automatic weighing systems shall comply with the requirements for automatic proportioning devices in Section 90-5.03A, "Proportioning for Pavement." Automatic devices shall be automatic to the extent that the only manual operation required for proportioning the aggregates, cement, and supplementary cementitious material for one batch of concrete is a single operation of a switch or starter.

• Proportioning devices shall be tested as frequently as the Engineer may deem necessary to ensure their accuracy.

• Weighing equipment shall be insulated against vibration or movement of other operating equipment in the plant. When the plant is in operation, the weight of each batch of material shall not vary from the weight designated by the Engineer by more than the tolerances specified herein.

• Equipment for cumulative weighing of aggregate shall have a zero tolerance of ±0.5 percent of the designated total batch weight of the aggregate. For systems with individual weigh hoppers for the various sizes of aggregate, the zero tolerance shall be ±0.5 percent of the individual batch weight designated for each size of aggregate. Equipment for cumulative weighing of cement and supplementary cementitious material shall have a zero tolerance of ±0.5 percent of the designated total batch weight of the cement and supplementary cementitious

material. Equipment for weighing cement or supplementary cementitious material separately shall have a zero tolerance of ±0.5 percent of their designated individual batch weights. Equipment for measuring water shall have a zero tolerance of ±0.5 percent of its designated weight or volume.

- The weight indicated for any batch of material shall not vary from the preselected scale setting by more than the following:

A. Aggregate weighed cumulatively shall be within 1.0 percent of the designated total batch weight of the aggregate. Aggregates weighed individually shall be within 1.5 percent of their respective designated batch weights; and
B. Cement shall be 99 to 102 percent of its designated batch weight. When weighed individually, supplementary cementitious material shall be 99 to 102 percent of its designated batch weight. When supplementary cementitious material and cement are permitted to be weighed cumulatively, cement shall be weighed first to 99 to 102 percent of its designated batch weight, and the total for cement and supplementary cementitious material shall be 99 to 102 percent of the sum of their designated batch weights; and
C. Water shall be within 1.5 percent of its designated weight or volume.

- Each scale graduation shall be approximately 0.001 of the total capacity of the scale. The capacity of scales for weighing cement, supplementary cementitious material, or cement plus supplementary cementitious material and aggregates shall not exceed that of commercially available scales having single graduations indicating a weight not exceeding the maximum permissible weight variation above, except that no scale shall be required having a capacity of less than 1,000 pounds, with one pound graduations.

90-5.03 PROPORTIONING

- Proportioning shall consist of dividing the aggregates into the specified sizes, each stored in a separate bin, and combining them with cementitious material and water as provided in these specifications. Aggregates shall be proportioned by weight.
- At the time of batching, aggregates shall have been dried or drained sufficiently to result in a stable moisture content such that no visible separation of water from aggregate will take place during transportation from the proportioning plant to the point of mixing. In no event shall the free moisture content of the fine aggregate at the time of batching exceed 8 percent of its saturated, surface-dry weight.
- Should separate supplies of aggregate material of the same size group, but of different moisture content or specific gravity or surface characteristics affecting workability, be available at the proportioning plant, withdrawals shall be made from one supply exclusively and the materials therein completely exhausted before starting upon another.
- Bulk Type IP (MS) cement shall be weighed in an individual hopper and shall be kept separate from the aggregates until the ingredients are released for discharge into the mixer.
- Bulk cement and supplementary cementitious material may be weighed in separate, individual weigh hoppers or may be weighed in the same weigh hopper and shall be kept separate from the aggregates until the ingredients are released for discharge into the mixer. If the cement and supplementary cementitious material are weighed cumulatively, the cement shall be weighed first.

• If cement and supplementary cementitious material are weighed in separate weigh hoppers, the weigh systems for the proportioning of the aggregate, the cement, and the supplementary cementitious material shall be individual and distinct from all other weigh systems. Each weigh system shall be equipped with a hopper, a lever system, and an indicator to constitute an individual and independent material-weighing device. The cement and the supplementary cementitious material shall be discharged into the mixer simultaneously with the aggregate.

• The scales and weigh hoppers for bulk weighing cement, supplementary cementitious material, or cement plus supplementary cementitious material shall be separate and distinct from the aggregate weighing equipment.

• For batches of one cubic yard or more, the batching equipment shall conform to one of the following combinations:

A. Separate boxes and separate scale and indicator for weighing each size of aggregate.
B. Single box and scale indicator for all aggregates.
C. Single box or separate boxes and automatic weighing mechanism for all aggregates.

• In order to check the accuracy of batch weights, the gross weight and tare weight of batch trucks, truck mixers, truck agitators, and non-agitating hauling equipment shall be determined when ordered by the Engineer. The equipment shall be weighed on scales designated by the Engineer.

90-5.03A PROPORTIONING FOR PAVEMENT

• Aggregates and bulk supplementary cementitious material for use in pavement shall be proportioned by weight by means of automatic proportioning devices of approved type conforming to these specifications.

• The Contractor shall install and maintain in operating condition an electronically actuated moisture meter that will indicate, on a readily visible scale, changes in the moisture content of the fine aggregate as it is batched within a sensitivity of 0.5 percent by weight of the fine aggregate.

• The batching of cement, supplementary cementitious material, or cement plus supplementary cementitious material and aggregate shall be interlocked so that a new batch cannot be started until all weigh hoppers are empty, the proportioning devices are within zero tolerance, and the discharge gates are closed. The interlock shall permit no part of the batch to be discharged until all aggregate hoppers and the cement and supplementary cementitious material hoppers or the cement plus supplementary cementitious material hopper are charged with weights that are within the tolerances specified in Section 90-5.02, "Proportioning Devices."

• If interlocks are required for cement and supplementary cementitious material charging mechanisms and cement and supplementary cementitious material are weighed cumulatively, their charging mechanisms shall be interlocked to prevent the introduction of mineral admixture until the weight of cement in the cement weigh hopper is within the tolerances specified in Section 90-5.02, "Proportioning Devices."

• If concrete is completely mixed in stationary paving mixers, the supplementary cementitious materials shall be weighed in a separate weigh hopper and the supplementary cementitious material and cement shall be introduced simultaneously into the mixer

proportionately with the aggregate. If the Contractor provides certification that the stationary mixer is capable of mixing the cement, supplementary cementitious material, aggregates, and water uniformly before discharge, weighing the supplementary cementitious material cumulatively with the cement is permitted. Certification shall contain the following:

A. Test results for 2 compressive strength test cylinders of concrete taken within the first one-third and 2 compressive strength test cylinders of concrete taken within the last one-third of the concrete discharged from a single batch from the stationary paving mixer. Strength tests and cylinder preparation will be in conformance with the provisions of Section 90-9, "Compressive Strength";
B. Calculations demonstrating that the difference in the averages of 2 compressive strengths taken in the first one-third is no greater than 7.5 percent different than the averages of 2 compressive strengths taken in the last one-third of the concrete discharged from a single batch from the stationary paving mixer. Strength tests and cylinder preparation will be in conformance with the provisions of Section 90-9, "Compressive Strength;" and
C. The mixer rotation speed and time of mixing before discharge that are required to produce a mix that meets the requirements above.

- The discharge gate on the cement and supplementary cementitious material hoppers or the cement plus supplementary cementitious material hopper shall be designed to permit regulating the flow of cement, supplementary cementitious material, or cement plus supplementary cementitious material into the aggregate as directed by the Engineer.
- If separate weigh boxes are used for each size of aggregate, the discharge gates shall permit regulating the flow of each size of aggregate as directed by the Engineer.
- Material discharged from the several bins shall be controlled by gates or by mechanical conveyors. The means of withdrawal from the several bins, and of discharge from the weigh box, shall be interlocked so that not more than one bin can discharge at a time, and so that the weigh box cannot be tripped until the required quantity from each of the several bins has been deposited therein. Should a separate weigh box be used for each size of aggregate, all may be operated and discharged simultaneously.
- If the discharge from the several bins is controlled by gates, each gate shall be actuated automatically so that the required mass is discharged into the weigh box, after which the gate shall automatically close and lock.
- The automatic weighing system shall be designed so that all proportions required may be set on the weighing controller at the same time.

90-6 MIXING AND TRANSPORTING

90-6.01 GENERAL

- Concrete shall be mixed in mechanically operated mixers, except that when permitted by the Engineer, batches not exceeding 1/3 cubic yard may be mixed by hand methods in conformance with the provisions in Section 90-6.05, "Hand-Mixing."
- Equipment having components made of aluminum or magnesium alloys that would have contact with plastic concrete during mixing, transporting, or pumping of portland cement concrete shall not be used.
- Concrete shall be homogeneous and thoroughly mixed, and there shall be no lumps or evidence of undispersed cementitious material.

• Uniformity of concrete mixtures will be determined by differences in penetration as determined by California Test 533, or slump as determined by ASTM Designation: C 143, and by variations in the proportion of coarse aggregate as determined by California Test 529.

• When the mix design specifies a penetration value, the difference in penetration, determined by comparing penetration tests on 2 samples of mixed concrete from the same batch or truck mixer load, shall not exceed 1/2-inch. When the mix design specifies a slump value, the difference in slump, determined by comparing slump tests on 2 samples of mixed concrete from the same batch or truck mixer load, shall not exceed the values given in the table below. Variation in the proportion of coarse aggregate will be determined by comparing the results of tests of 2 samples of mixed concrete from the same batch or truck mixer load and the difference between the 2 results shall not exceed 170 pounds per cubic yard of concrete.

Average Slump	Maximum Permissible Difference
Less than 4"	1"
4" to 6"	1 1/2"
Greater than 6" to 9"	2"

• The Contractor shall furnish samples of the freshly mixed concrete and provide satisfactory facilities for obtaining the samples.

90-6.02 MACHINE MIXING

• Concrete mixers may be of the revolving drum or the revolving blade type, and the mixing drum or blades shall be operated uniformly at the mixing speed recommended by the manufacturer. Mixers and agitators that have an accumulation of hard concrete or mortar shall not be used.

• The temperature of mixed concrete, immediately before placing, shall be not less than 50° F or more than 90° F. Aggregates and water shall be heated or cooled as necessary to produce concrete within these temperature limits. Neither aggregates nor mixing water shall be heated to exceed 150° F. If ice is used to cool the concrete, discharge of the mixer will not be permitted until all ice is melted.

• The batch shall be so charged into the mixer that some water will enter in advance of cementitious materials and aggregates. All water shall be in the drum by the end of the first one-fourth of the specified mixing time.

• Cementitious materials shall be batched and charged into the mixer by means that will not result either in loss of cementitious materials due to the effect of wind, in accumulation of cementitious materials on surfaces of conveyors or hoppers, or in other conditions that reduce or vary the required quantity of cementitious material in the concrete mixture.

• Paving and stationary mixers shall be operated with an automatic timing device. The timing device and discharge mechanism shall be interlocked so that during normal operation no part of the batch will be discharged until the specified mixing time has elapsed.

• The total elapsed time between the intermingling of damp aggregates and all cementitious materials and the start of mixing shall not exceed 30 minutes.

• The size of batch shall not exceed the manufacturer's guaranteed capacity.

• When producing concrete for pavement or base, suitable batch counters shall be installed and maintained in good operating condition at job site batching plants and stationary mixers. The batch counters shall indicate the exact number of batches proportioned and mixed.

• Concrete shall be mixed and delivered to the job site by means of one of the following combinations of operations:

A. Mixed completely in a stationary mixer and the mixed concrete transported to the point of delivery in truck agitators or in nonagitating hauling equipment (central-mixed concrete).
B. Mixed partially in a stationary mixer, and the mixing completed in a truck mixer (shrink-mixed concrete).
C. Mixed completely in a truck mixer (transit-mixed concrete).
D. Mixed completely in a paving mixer.

• Agitators may be truck mixers operating at agitating speed or truck agitators. Each mixer and agitator shall have attached thereto in a prominent place a metal plate or plates on which is plainly marked the various uses for which the equipment is designed, the manufacturer's guaranteed capacity of the drum or container in terms of the volume of mixed concrete and the speed of rotation of the mixing drum or blades.

• Truck mixers shall be equipped with electrically or mechanically actuated revolution counters by which the number of revolutions of the drum or blades may readily be verified.

• When shrink-mixed concrete is furnished, concrete that has been partially mixed at a central plant shall be transferred to a truck mixer and all requirements for transit-mixed concrete shall apply. No credit in the number of revolutions at mixing speed will be allowed for partial mixing in a central plant.

90-6.03 TRANSPORTING MIXED CONCRETE

• Mixed concrete may be transported to the delivery point in truck agitators or truck mixers operating at the speed designated by the manufacturer of the equipment as agitating speed, or in non-agitating hauling equipment, provided the consistency and workability of the mixed concrete upon discharge at the delivery point is suitable for adequate placement and consolidation in place, and provided the mixed concrete after hauling to the delivery point conforms to the provisions in Section 90-6.01, "General."

• Truck agitators shall be loaded not to exceed the manufacturer's guaranteed capacity and shall maintain the mixed concrete in a thoroughly mixed and uniform mass during hauling.

• Bodies of nonagitating hauling equipment shall be constructed so that leakage of the concrete mix, or any part thereof, will not occur at any time.

• Concrete hauled in open-top vehicles shall be protected during hauling against rain or against exposure to the sun for more than 20 minutes when the ambient temperature exceeds 75° F.

• No additional mixing water shall be incorporated into the concrete during hauling or after arrival at the delivery point, unless authorized by the Engineer. If the Engineer authorizes additional water to be incorporated into the concrete, the drum shall be revolved not less than 30 revolutions at mixing speed after the water is added and before discharge is commenced.

• The rate of discharge of mixed concrete from truck mixer-agitators shall be controlled by the speed of rotation of the drum in the discharge direction with the discharge gate fully open.

• If a truck mixer or agitator is used for transporting concrete to the delivery point, discharge shall be completed within 1.5 hours or before 250 revolutions of the drum or blades, whichever occurs first, after the introduction of the cement to the aggregates. Under conditions contributing to quick stiffening of the concrete, or if the temperature of the concrete is 85° F or

above, the time allowed may be less than 1.5 hours. If an admixture is used to retard the set time, the temperature of the concrete shall not exceed 85° F, the time limit shall be 2 hours, and the revolution limitation shall be 300.

- If nonagitating hauling equipment is used for transporting concrete to the delivery point, discharge shall be completed within one hour after the addition of the cement to the aggregates. Under conditions contributing to quick stiffening of the concrete, or when the temperature of the concrete is 85° F or above, the time between the introduction of cement to the aggregates and discharge shall not exceed 45 minutes.
- Each load of concrete delivered at the job site shall be accompanied by a weighmaster certificate showing the mix identification number, nonrepeating load number, date and time at which the materials were batched, the total amount of water added to the load, and for transit-mixed concrete, the reading of the revolution counter at the time the truck mixer is charged with cement. This weighmaster certificate shall also show the actual scale weights (pounds) for the ingredients batched. Theoretical or target batch weights shall not be used as a substitute for actual scale weights.
- Weighmaster certificates shall be provided in printed form, or if approved by the Engineer, the data may be submitted in electronic media. Electronic media shall be presented in a tab-delimited format on a 3 1/2-inch diskette with a capacity of at least 1.4 megabytes. Captured data, for the ingredients represented by each batch shall be "line feed, carriage return" (LFCR) and "one line, separate record" with allowances for sufficient fields to satisfy the amount of data required by these specifications.
- The Contractor may furnish a weighmaster certificate accompanied by a separate certificate that lists the actual batch weights or measurements for a load of concrete provided that both certificates are imprinted with the same nonrepeating load number that is unique to the contract and delivered to the jobsite with the load.
- Weighmaster certificates furnished by the Contractor shall conform to the provisions in Section 9-1.01, "Measurement of Quantities."

90-6.04 TIME OR AMOUNT OF MIXING

- Mixing of concrete in paving or stationary mixers shall continue for the required mixing time after all ingredients, except water and admixture, if added with the water, are in the mixing compartment of the mixer before any part of the batch is released. Transfer time in multiple drum mixers shall not be counted as part of the required mixing time.
- The required mixing time, in paving or stationary mixers, of concrete used for concrete structures, except minor structures, shall be not less than 90 seconds or more than 5 minutes, except that when directed by the Engineer in writing, the requirements of the following paragraph shall apply.
- The required mixing time, in paving or stationary mixers, except as provided in the preceding paragraph, shall be not less than 50 seconds or more than 5 minutes.
- The minimum required revolutions at the mixing speed for transit-mixed concrete shall not be less than that recommended by the mixer manufacturer, but in no case shall the number of revolutions be less than that required to consistently produce concrete conforming to the provisions for uniformity in Section 90-6.01, "General."
- When a high range water-reducing admixture is added to the concrete at the job site, the total number of revolutions shall not exceed 300.

90-6.05 HAND-MIXING

• Hand-mixed concrete shall be made in batches of not more than 1/3 cubic yard and shall be mixed on a watertight, level platform. The proper amount of coarse aggregate shall be measured in measuring boxes and spread on the platform and the fine aggregate shall be spread on this layer, the 2 layers being not more than one foot in total depth. On this mixture shall be spread the dry cementitious materials and the whole mass turned no fewer than 2 times dry; then sufficient clean water shall be added, evenly distributed, and the whole mass again turned no fewer than 3 times, not including placing in the carriers or forms.

90-6.06 AMOUNT OF WATER AND PENETRATION

• The amount of water used in concrete mixes shall be regulated so that the penetration of the concrete as determined by California Test 533 or the slump of the concrete as determined by ASTM Designation: C 143 is within the nominal values shown in the following table. When the penetration or slump of the concrete is found to exceed the nominal values listed, the mixture of subsequent batches shall be adjusted to reduce the penetration or slump to a value within the nominal range shown. Batches of concrete with a penetration or slump exceeding the maximum values listed shall not be used in the work. If Type F or Type G chemical admixtures are added to the mix, the penetration requirements shall not apply and the slump shall not exceed 9 inches after the chemical admixtures are added.

Type of Work	Nominal		Maximum	
	Penetration (inches)	Slump (inches)	Penetration (inches)	Slump (inches)
Concrete Pavement	0 - 1	—	1 1/2	—
Non-reinforced concrete facilities	0 - 1 1/2	—	2	—
Reinforced concrete structures				
Sections over 12 inches thick	0 - 1 1/2	—	2 1/2	—
Sections 12 inches thick or less	0 - 2	—	3	—
Concrete placed under water	—	6 - 8	—	9
Cast-in-place concrete piles	2 1/2 - 3 1/2	5 - 7	4	8

• The amount of free water used in concrete shall not exceed 310 pounds per cubic yard, plus 20 pounds for each required 100 pounds of cementitious material in excess of 550 pounds per cubic yard.

• The term free water is defined as the total water in the mixture minus the water absorbed by the aggregates in reaching a saturated surface-dry condition.

• If there are adverse or difficult conditions that affect the placing of concrete, the above specified penetration and free water content limitations may be exceeded providing the Contractor is granted permission by the Engineer in writing to increase the cementitious material content per cubic yard of concrete. The increase in water and cementitious material shall be at a ratio not to exceed 30 pounds of water per added 100 pounds of cementitious material per cubic yard. Full compensation for additional cementitious material and water added under these conditions shall be considered as included in the contract price paid for the concrete work involved and no additional compensation will be allowed therefor.

• The equipment for supplying water to the mixer shall be constructed and arranged so that the amount of water added can be measured accurately. Any method of discharging water into the mixer for a batch shall be accurate within 1.5 percent of the quantity of water required to be

added to the mix for any position of the mixer. Tanks used to measure water shall be designed so that water cannot enter while water is being discharged into the mixer and discharge into the mixer shall be made rapidly in one operation without dribbling. All equipment shall be arranged so as to permit checking the amount of water delivered by discharging into measured containers.

90-7 CURING CONCRETE

90-7.01 METHODS OF CURING

• Newly placed concrete shall be cured by the methods specified in this Section 90-7.01 and the special provisions.

90-7.01A WATER METHOD

• The concrete shall be kept continuously wet by the application of water for a minimum curing period of 7 days after the concrete has been placed.

• Cotton mats, rugs, carpets, or earth or sand blankets may be used as a curing medium to retain the moisture during the curing period.

• If a curing medium consisting of cotton mats, rugs, carpets, polyethylene sheeting, polyethylene sheeting on burlap, or earth or sand blankets is to be used to retain the moisture, the entire surface of the concrete shall be kept damp by applying water with a nozzle that so atomizes the flow that a mist and not a spray is formed, until the surface of the concrete is covered with the curing medium. The moisture from the nozzle shall not be applied under pressure directly upon the concrete and shall not be allowed to accumulate on the concrete in a quantity sufficient to cause a flow or wash the surface. At the expiration of the curing period, the concrete surfaces shall be cleared of all curing media.

• At the option of the Contractor, a curing medium consisting of white opaque polyethylene sheeting extruded onto burlap may be used to cure concrete structures. The polyethylene sheeting shall have a minimum thickness of 4-mil, and shall be extruded onto 10-ounce burlap.

• At the option of the Contractor, a curing medium consisting of polyethylene sheeting may be used to cure concrete columns. The polyethylene sheeting shall have a minimum thickness of 10-mil achieved in a single layer of material.

• If the Contractor chooses to use polyethylene sheeting or polyethylene sheeting on burlap as a curing medium, these media and any joints therein shall be secured as necessary to provide moisture retention and shall be within 3 inches of the concrete at all points along the surface being cured. When these media are used, the temperature of the concrete shall be monitored during curing. If the temperature of the concrete cannot be maintained below 140° F, use of these curing media shall be disallowed.

• When concrete bridge decks and flat slabs are to be cured without the use of a curing medium, the entire surface of the bridge deck or slab shall be kept damp by the application of water with an atomizing nozzle as specified above, until the concrete has set, after which the entire surface of the concrete shall be sprinkled continuously with water for a period of not less than 7 days.

90-7.01B CURING COMPOUND METHOD

• Surfaces of the concrete that are exposed to the air shall be sprayed uniformly with a curing compound.

- Curing compounds to be used shall be as follows:

1. Pigmented curing compound conforming to the requirements in ASTM Designation: C 309, Type 2, Class B, except the resin type shall be poly-alpha-methylstyrene.
2. Pigmented curing compound conforming to the requirements in ASTM Designation: C 309, Type 2, Class B.
3. Pigmented curing compound conforming to the requirements in ASTM Designation: C 309, Type 2, Class A.
4. Nonpigmented curing compound conforming to the requirements in ASTM Designation: C 309, Type 1, Class B.
5. Nonpigmented curing compound conforming to the requirements in ASTM Designation: C 309, Type 1, Class A.
6. Nonpigmented curing compound with fugitive dye conforming to the requirements in ASTM Designation: C 309, Type 1-D, Class A.

- The infrared scan for the dried vehicle from curing compound (1) shall match the infrared scan on file at the Transportation Laboratory.
- The loss of water for each type of curing compound, when tested in conformance with the requirements in California Test 534, shall not be more than 0.28-pounds per square yard in 24 hours.
- The curing compound to be used will be specified elsewhere in these specifications or in the special provisions.
- If the use of curing compound is required or permitted elsewhere in these specifications or in the special provisions and no specific kind is specified, any of the curing compounds listed above may be used.
- Curing compound shall be applied at a nominal rate of one gallon per 150 square feet, unless otherwise specified.
- At any point, the application rate shall be within ±50 square feet per gallon of the nominal rate specified, and the average application rate shall be within ±25 square feet per gallon of the nominal rate specified when tested in conformance with the requirements in California Test 535. Runs, sags, thin areas, skips, or holidays in the applied curing compound shall be evidence that the application is not satisfactory.
- Curing compounds shall be applied using power operated spray equipment. The power operated spraying equipment shall be equipped with an operational pressure gage and a means of controlling the pressure. Hand spraying of small and irregular areas that are not reasonably accessible to mechanical spraying equipment, in the opinion of the Engineer, may be permitted.
- The curing compound shall be applied to the concrete following the surface finishing operation, immediately before the moisture sheen disappears from the surface, but before any drying shrinkage or craze cracks begin to appear. In the event of any drying or cracking of the surface, application of water with an atomizing nozzle as specified in Section 90-7.01A, "Water Method," shall be started immediately and shall be continued until application of the compound is resumed or started; however, the compound shall not be applied over any resulting freestanding water. Should the film of compound be damaged from any cause before the expiration of 7 days after the concrete is placed in the case of structures and 72 hours in the case of pavement, the damaged portion shall be repaired immediately with additional compound.
- At the time of use, compounds containing pigments shall be in a thoroughly mixed condition with the pigment uniformly dispersed throughout the vehicle. A paddle shall be used

to loosen all settled pigment from the bottom of the container, and a power driven agitator shall be used to disperse the pigment uniformly throughout the vehicle.

- Agitation shall not introduce air or other foreign substance into the curing compound.
- The manufacturer shall include in the curing compound the necessary additives for control of sagging, pigment settling, leveling, de-emulsification, or other requisite qualities of a satisfactory working material. Pigmented curing compounds shall be manufactured so that the pigment does not settle badly, does not cake or thicken in the container, and does not become granular or curdled. Settlement of pigment shall be a thoroughly wetted, soft, mushy mass permitting the complete and easy vertical penetration of a paddle. Settled pigment shall be easily redispersed, with minimum resistance to the sideways manual motion of the paddle across the bottom of the container, to form a smooth uniform product of the proper consistency.
- Curing compounds shall remain sprayable at temperatures above 40° F and shall not be diluted or altered after manufacture.
- The curing compound shall be packaged in clean 274-gallon totes, 55-gallon barrels or 5-gallon pails shall be supplied from a suitable storage tank located at the jobsite. The containers shall comply with "Title 49, Code of Federal Regulations, Hazardous Materials Regulations." The 274-gallon totes and the 55-gallon barrels shall have removable lids and airtight fasteners. The 5-gallon pails shall be round and have standard full open head and bail. Lids with bungholes will not be permitted. Settling or separation of solids in containers, except tanks, must be completely redispersed with low speed mixing prior to use, in conformance with these specifications and the manufacturer's recommendations. Mixing shall be accomplished either manually by use of a paddle or by use of a mixing blade driven by a drill motor, at low speed. Mixing blades shall be the type used for mixing paint. On-site storage tanks shall be kept clean and free of contaminants. Each tank shall have a permanent system designed to completely redisperse settled material without introducing air or other foreign substances.
- Steel containers and lids shall be lined with a coating that will prevent destructive action by the compound or chemical agents in the air space above the compound. The coating shall not come off the container or lid as skins. Containers shall be filled in a manner that will prevent skinning. Plastic containers shall not react with the compound.
- Each container shall be labeled with the manufacturer's name, kind of curing compound, batch number, volume, date of manufacture, and volatile organic compound (VOC) content. The label shall also warn that the curing compound containing pigment shall be well stirred before use. Precautions concerning the handling and the application of curing compound shall be shown on the label of the curing compound containers in conformance with the Construction Safety Orders and General Industry Safety Orders of the State.
- Containers of curing compound shall be labeled to indicate that the contents fully comply with the rules and regulations concerning air pollution control in the State.
- When the curing compound is shipped in tanks or tank trucks, a shipping invoice shall accompany each load. The invoice shall contain the same information as that required herein for container labels.
- Curing compound will be sampled by the Engineer at the source of supply, at the job site, or at both locations.
- Curing compound shall be formulated so as to maintain the specified properties for a minimum of one year. The Engineer may require additional testing before use to determine compliance with these specifications if the compound has not been used within one year or whenever the Engineer has reason to believe the compound is no longer satisfactory.

• Tests will be conducted in conformance with the latest ASTM test methods and methods in use by the Transportation Laboratory.

90-7.01C WATERPROOF MEMBRANE METHOD

• The exposed finished surfaces of concrete shall be sprayed with water, using a nozzle that so atomizes the flow that a mist and not a spray is formed, until the concrete has set, after which the curing membrane, shall be placed. The curing membrane shall remain in place for a period of not less than 72 hours.

• Sheeting material for curing concrete shall conform to the requirements in AASHTO Designation: M 171 for white reflective materials.

• The sheeting material shall be fabricated into sheets of such width as to provide a complete cover for the entire concrete surface. Joints in the sheets shall be securely cemented together in such a manner as to provide a waterproof joint. The joint seams shall have a minimum lap of 0.33-foot.

• The sheets shall be securely weighted down by placing a bank of earth on the edges of the sheets or by other means satisfactory to the Engineer.

• Should any portion of the sheets be broken or damaged before the expiration of 72 hours after being placed, the broken or damaged portions shall be immediately repaired with new sheets properly cemented into place.

• Sections of membrane that have lost their waterproof qualities or have been damaged to such an extent as to render them unfit for curing the concrete shall not be used.

90-7.01D FORMS-IN-PLACE METHOD

• Formed surfaces of concrete may be cured by retaining the forms in place. The forms shall remain in place for a minimum period of 7 days after the concrete has been placed, except that for members over 20 inches in least dimension the forms shall remain in place for a minimum period of 5 days.

• Joints in the forms and the joints between the end of forms and concrete shall be kept moisture tight during the curing period. Cracks in the forms and cracks between the forms and the concrete shall be resealed by methods subject to the approval of the Engineer.

90-7.02 CURING PAVEMENT

• The entire exposed area of the pavement, including edges, shall be cured by the waterproof membrane method, or curing compound method using curing compound (1) or (2) as the Contractor may elect. Should the side forms be removed before the expiration of 72 hours following the start of curing, the exposed pavement edges shall also be cured. If the pavement is cured by means of the curing compound method, the sawcut and all portions of the curing compound that have been disturbed by sawing operations shall be restored by spraying with additional curing compound.

• Curing shall commence as soon as the finishing process provided in Section 40-1.10, "Final Finishing," has been completed. The method selected shall conform to the provisions in Section 90-7.01, "Methods of Curing."

• When the curing compound method is used, the compound shall be applied to the entire pavement surface by mechanical sprayers. Spraying equipment shall be of the fully atomizing type equipped with a tank agitator that provides for continual agitation of the curing compound during the time of application. The spray shall be adequately protected against wind, and the

nozzles shall be so oriented or moved mechanically transversely as to result in the minimum specified rate of coverage being applied uniformly on exposed faces. Hand spraying of small and irregular areas, and areas inaccessible to mechanical spraying equipment, in the opinion of the Engineer, will be permitted. When the ambient air temperature is above 60° F, the Contractor shall fog the surface of the concrete with a fine spray of water as specified in Section 90-7.01A, "Water Method." The surface of the pavement shall be kept moist between the hours of 10:00 a.m. and 4:30 p.m. on the day the concrete is placed. However, the fogging done after the curing compound has been applied shall not begin until the compound has set sufficiently to prevent displacement. Fogging shall be discontinued if ordered in writing by the Engineer.

90-7.03 CURING STRUCTURES

- Newly placed concrete for cast-in-place structures, other than highway bridge decks, shall be cured by the water method, the forms-in-place method, or, as permitted herein, by the curing compound method, in conformance with the provisions in Section 90-7.01, "Methods of Curing."
- The curing compound method using a pigmented curing compound may be used on concrete surfaces of construction joints, surfaces that are to be buried underground, and surfaces where only ordinary surface finish is to be applied and on which a uniform color is not required and that will not be visible from a public traveled way. If the Contractor elects to use the curing compound method on the bottom slab of box girder spans, the curing compound shall be curing compound (1).
- The top surface of highway bridge decks shall be cured by both the curing compound method and the water method. The curing compound shall be curing compound (1).
- Concrete surfaces of minor structures, as defined in Section 51-1.02, "Minor Structures," shall be cured by the water method, the forms-in-place method or the curing compound method.
- When deemed necessary by the Engineer during periods of hot weather, water shall be applied to concrete surfaces being cured by the curing compound method or by the forms-in-place method, until the Engineer determines that a cooling effect is no longer required. Application of water for this purpose will be paid for as extra work as provided in Section 4-1.03D, "Extra Work."

90-7.04 CURING PRECAST CONCRETE MEMBERS

- Precast concrete members shall be cured in conformance with any of the methods specified in Section 90-7.01, "Methods of Curing." Curing shall be provided for the minimum time specified for each method or until the concrete reaches its design strength, whichever is less. Steam curing may also be used for precast members and shall conform to the following provisions:

A. After placement of the concrete, members shall be held for a minimum 4-hour presteaming period. If the ambient air temperature is below 50° F, steam shall be applied during the presteaming period to hold the air surrounding the member at a temperature between 50° F and 90° F.
B. To prevent moisture loss on exposed surfaces during the presteaming period, members shall be covered as soon as possible after casting or the exposed surfaces shall be kept wet by fog spray or wet blankets.

C. Enclosures for steam curing shall allow free circulation of steam about the member and shall be constructed to contain the live steam with a minimum moisture loss. The use of tarpaulins or similar flexible covers will be permitted, provided they are kept in good repair and secured in such a manner as to prevent the loss of steam and moisture.
D. Steam at the jets shall be at low pressure and in a saturated condition. Steam jets shall not impinge directly on the concrete, test cylinders, or forms. During application of the steam, the temperature rise within the enclosure shall not exceed 40° F per hour. The curing temperature throughout the enclosure shall not exceed 150° F and shall be maintained at a constant level for a sufficient time necessary to develop the required transfer strength. Control cylinders shall be covered to prevent moisture loss and shall be placed in a location where temperature is representative of the average temperature of the enclosure.
E. Temperature recording devices that will provide an accurate, continuous, permanent record of the curing temperature shall be provided. A minimum of one temperature recording device per 200 feet of continuous bed length will be required for checking temperature.
F. Members in pretension beds shall be detensioned immediately after the termination of steam curing while the concrete and forms are still warm, or the temperature under the enclosure shall be maintained above 60° F until the stress is transferred to the concrete.
G. Curing of precast concrete will be considered completed after termination of the steam curing cycle.

90-7.05 CURING PRECAST PRESTRESSED CONCRETE PILES

• Newly placed concrete for precast prestressed concrete piles shall be cured in conformance with the provisions in Section 90-7.04, "Curing Precast Concrete Members," except that piles in a corrosive environment shall be cured as follows:

A. Piles shall be either steam cured or water cured. If water curing is used, the piles shall be kept continuously wet by the application of water in conformance with the provisions in Section 90-7.01A, "Water Method."
B. If steam curing is used, the steam curing provisions in Section 90-7.04, "Curing Precast Concrete Members," shall apply except that the piles shall be kept continuously wet for their entire length for a period of not less than 3 days, including the holding and steam curing periods.

90-7.06 CURING SLOPE PROTECTION

• Concrete slope protection shall be cured in conformance with any of the methods specified in Section 90-7.01, "Methods of Curing."

• Concreted-rock slope protection shall be cured in conformance with any of the methods specified in Section 90-7.01, "Methods of Curing," with a blanket of earth kept wet for 72 hours, or by sprinkling with a fine spray of water every 2 hours during the daytime for a period of 3 days.

90-7.07 CURING MISCELLANEOUS CONCRETE WORK

• Exposed surfaces of curbs shall be cured by pigmented curing compounds as specified in Section 90-7.01B, "Curing Compound Method."

- Concrete sidewalks, gutter depressions, island paving, curb ramps, driveways, and other miscellaneous concrete areas shall be cured in conformance with any of the methods specified in Section 90-7.01, "Methods of Curing."
- Shotcrete shall be cured for at least 72 hours by spraying with water, by a moist earth blanket, or by any of the methods provided in Section 90-7.01, "Methods of Curing."
- Mortar and grout shall be cured by keeping the surface damp for 3 days.
- After placing, the exposed surfaces of sign structure foundations, including pedestal portions, if constructed, shall be cured for at least 72 hours by spraying with water, by a moist earth blanket, or by any of the methods provided in Section 90-7.01, "Methods of Curing."

90-8 PROTECTING CONCRETE

90-8.01 GENERAL

- In addition to the provisions in Section 7-1.16, "Contractor's Responsibility for the Work and Materials," the Contractor shall protect concrete as provided in this Section 90-8. If required by the Engineer, the Contractor shall submit a written outline of the proposed methods for protecting the concrete.
- The Contractor shall protect concrete from damage from any cause, which shall include, but not be limited to: rain, heat, cold, wind, Contractor's actions, and actions of others.
- Concrete shall not be placed on frozen or ice-coated ground or subgrade nor on ice-coated forms, reinforcing steel, structural steel, conduits, precast members, or construction joints.
- Under rainy conditions, placing of concrete shall be stopped before the quantity of surface water is sufficient to damage surface mortar or cause a flow or wash of the concrete surface, unless the Contractor provides adequate protection against damage.
- Concrete that has been frozen or damaged by other causes, as determined by the Engineer, shall be removed and replaced by the Contractor at the Contractor's expense.

90-8.02 PROTECTING CONCRETE STRUCTURES

- Structure concrete and shotcrete used as structure concrete shall be maintained at a temperature of not less than 45° F for 72 hours after placing and at not less than 40° F for an additional 4 days.

90-8.03 PROTECTING CONCRETE PAVEMENT

- Pavement concrete shall be maintained at a temperature of not less than 40° F for 72 hours.
- Except as provided in Section 7-1.08, "Public Convenience," the Contractor shall protect concrete pavement against construction and other activities that abrade, scar, discolor, reduce texture depth, lower coefficient of friction, or otherwise damage the surface. Stockpiling, drifting, or excessive spillage of soil, gravel, petroleum products, and concrete or asphalt mixes on the surface of concrete pavement is prohibited unless otherwise specified in these specifications, the special provisions or permitted by the Engineer.
- If ordered by the Engineer or shown on the plans or specified in the special provisions, pavement crossings shall be constructed for the convenience of public traffic. The material and work necessary for the construction of the crossings, and their subsequent removal and disposal, will be paid for at the contract unit prices for the items of work involved and if there are no contract items for the work involved, payment for pavement crossings will be made by extra

work as provided in Section 4-1.03D, "Extra Work.". Where public traffic will be required to cross over the new pavement, Type III portland cement may be used in concrete, if permitted in writing by the Engineer. The pavement may be opened to traffic as soon as the concrete has developed a modulus of rupture of 550 pounds per square inch. The modulus of rupture will be determined by California Test 523.

• No traffic or Contractor's equipment, except as hereinafter provided, will be permitted on the pavement before a period of 10 days has elapsed after the concrete has been placed, nor before the concrete has developed a modulus of rupture of at least 550 pounds per square inch. Concrete that fails to attain a modulus of rupture of 550 pounds per square inch within 10 days shall not be opened to traffic until directed by the Engineer.

• Equipment for sawing weakened plane joints will be permitted on the pavement as specified in Section 40-1.08B, "Weakened Plane Joints."

• When requested in writing by the Contractor, the tracks on one side of paving equipment will be permitted on the pavement after a modulus of rupture of 350 pounds per square inch has been attained, provided that:

A. Unit pressure exerted on the pavement by the paver shall not exceed 20 pounds per square inch;
B. Tracks with cleats, grousers, or similar protuberances shall be modified or shall travel on planks or equivalent protective material, so that the pavement is not damaged; and
C. No part of the track shall be closer than one foot from the edge of pavement.

• In case of visible cracking of, or other damage to the pavement, operation of the paving equipment on the pavement shall be immediately discontinued.

• Damage to the pavement resulting from early use of pavement by the Contractor's equipment as provided above shall be repaired by the Contractor.

• The State will furnish the molds and machines for testing the concrete for modulus of rupture, and the Contractor, at the Contractor's expense, shall furnish the material and whatever labor the Engineer may require.

90-9 COMPRESSIVE STRENGTH

90-9.01 GENERAL

• Concrete compressive strength requirements consist of a minimum strength that shall be attained before various loads or stresses are applied to the concrete and, for concrete designated by strength, a minimum strength at the age of 28 days or at the age otherwise allowed in Section 90-1.01, "Description." The various strengths required are specified in these specifications or the special provisions or are shown on the plans.

• The compressive strength of concrete will be determined from test cylinders that have been fabricated from concrete sampled in conformance with the requirements of California Test 539. Test cylinders will be molded and initially field cured in conformance with California Test 540. Test cylinders will be cured and tested after receipt at the testing laboratory in conformance with the requirements of California Test 521. A strength test shall consist of the average strength of 2 cylinders fabricated from material taken from a single load of concrete, except that, if any cylinder should show evidence of improper sampling, molding, or testing, that cylinder shall be discarded and the strength test shall consist of the strength of the remaining cylinder.

- When concrete compressive strength is specified as a prerequisite to applying loads or stresses to a concrete structure or member, test cylinders for other than steam cured concrete will be cured in conformance with Method 1 of California Test 540. The compressive strength of concrete determined for these purposes will be evaluated on the basis of individual tests.
- When concrete is designated by 28-day compressive strength rather than by cementitious material content, the concrete strength to be used as a basis for acceptance of other than steam cured concrete will be determined from cylinders cured in conformance with Method 1 of California Test 540. If the result of a single compressive strength test at the maximum age specified or allowed is below the specified strength but is 95 percent or more of the specified strength, the Contractor shall make corrective changes, subject to approval of the Engineer, in the mix proportions or in the concrete fabrication procedures, before placing additional concrete, and shall pay to the State $10 for each in-place cubic yard of concrete represented by the deficient test. If the result of a single compressive strength test at the maximum age specified or allowed is below 95 percent of the specified strength, but is 85 percent or more of the specified strength, the Contractor shall make the corrective changes specified above, and shall pay to the State $15 for each in-place cubic yard of concrete represented by the deficient test. In addition, such corrective changes shall be made when the compressive strength of concrete tested at 7 days indicates, in the judgment of the Engineer, that the concrete will not attain the required compressive strength at the maximum age specified or allowed. Concrete represented by a single test that indicates a compressive strength of less than 85 percent of the specified 28-day compressive strength will be rejected in conformance with the provisions in Section 6-1.04, "Defective Materials."
- If the test result indicates that the compressive strength at the maximum curing age specified or allowed is below the specified strength, but is 85 percent or more of the specified strength, payments to the State as required above shall be made, unless the Contractor, at the Contractor's expense, obtains and submits evidence acceptable to the Engineer that the strength of the concrete placed in the work meets or exceeds the specified 28-day compressive strength. If the test result indicates a compressive strength at the maximum curing age specified or allowed below 85 percent, the concrete represented by that test will be rejected, unless the Contractor, at the Contractor's expense, obtains and submits evidence acceptable to the Engineer that the strength and quality of the concrete placed in the work are acceptable. If the evidence consists of tests made on cores taken from the work, the cores shall be obtained and tested in conformance with the requirements in ASTM Designation: C 42.
- No single compressive strength test shall represent more than 320 cubic yards.
- If a precast concrete member is steam cured, the compressive strength of the concrete will be determined from test cylinders that have been handled and stored in conformance with Method 3 of California Test 540. The compressive strength of steam cured concrete will be evaluated on the basis of individual tests representing specific portions of production. If the concrete is designated by 28-day compressive strength rather than by cementitious material content, the concrete shall be considered to be acceptable whenever its compressive strength reaches the specified 28-day compressive strength provided that strength is reached in not more than the maximum number of days specified or allowed after the member is cast.
- When concrete is specified by compressive strength, prequalification of materials, mix proportions, mixing equipment, and procedures proposed for use will be required prior to placement of the concrete. Prequalification shall be accomplished by the submission of acceptable certified test data or trial batch reports by the Contractor. Prequalification data shall

be based on the use of materials, mix proportions, mixing equipment, procedures, and size of batch proposed for use in the work.

- Certified test data, in order to be acceptable, shall indicate that not less than 90 percent of at least 20 consecutive tests exceed the specified strength at the maximum number of cure days specified or allowed, and none of those tests are less than 95 percent of specified strength. Strength tests included in the data shall be the most recent tests made on concrete of the proposed mix design and all shall have been made within one year of the proposed use of the concrete.
- Trial batch test reports, in order to be acceptable, shall indicate that the average compressive strength of 5 consecutive concrete cylinders, taken from a single batch, at not more than 28 days (or the maximum age allowed) after molding shall be at least 580 pounds per square inch greater than the specified 28-day compressive strength, and no individual cylinder shall have a strength less than the specified strength at the maximum age specified or allowed. Data contained in the report shall be from trial batches that were produced within one year of the proposed use of specified strength concrete in the project. Whenever air-entrainment is required, the air content of trial batches shall be equal to or greater than the air content specified for the concrete without reduction due to tolerances.
- Tests shall be performed in conformance with either the appropriate California Test methods or the comparable ASTM test methods. Equipment employed in testing shall be in good condition and shall be properly calibrated. If the tests are performed during the life of the contract, the Engineer shall be notified sufficiently in advance of performing the tests in order to witness the test procedures.

- The certified test data and trial batch test reports shall include the following information:

A. Date of mixing.
B. Mixing equipment and procedures used.
C. The size of batch in cubic yards and the weight, type, and source of all ingredients used.
D. Penetration or slump (if the concrete will be placed under water or placed in cast-in-place concrete piles) of the concrete.
E. The air content of the concrete if an air-entraining admixture is used.
F. The age at time of testing and strength of all concrete cylinders tested.

- Certified test data and trial batch test reports shall be signed by an official of the firm that performed the tests.
- When approved by the Engineer, concrete from trial batches may be used in the work at locations where concrete of a lower quality is required and the concrete will be paid for as the type or class of concrete required at that location.
- After materials, mix proportions, mixing equipment, and procedures for concrete have been prequalified for use, additional prequalification by testing of trial batches will be required prior to making changes that, in the judgment of the Engineer, could result in a strength of concrete below that specified.
- The Contractor's attention is directed to the time required to test trial batches and the Contractor shall be responsible for production of trial batches at a sufficiently early date so that the progress of the work is not delayed.
- When precast concrete members are manufactured at the plant of an established manufacturer of precast concrete members, the mix proportions of the concrete shall be

determined by the Contractor, and a trial batch and prequalification of the materials, mix proportions, mixing equipment, and procedures will not be required.

90-10 MINOR CONCRETE

90-10.01 GENERAL

- Concrete for minor structures, slope paving, curbs, sidewalks and other concrete work, when designated as minor concrete on the plans, in the specifications, or in the contract item, shall conform to the provisions specified herein.
- The Engineer, at the Engineer's discretion, will inspect and test the facilities, materials and methods for producing the concrete to ensure that minor concrete of the quality suitable for use in the work is obtained.

90-10.02 MATERIALS

- Minor concrete shall conform to the following requirements:

90-10.02A CEMENTITIOUS MATERIAL

- Cementitious material shall conform to the provisions in Section 90-1.01, "Description."

90-10.02B AGGREGATE

- Aggregate shall be clean and free from deleterious coatings, clay balls, roots, and other extraneous materials.
- Use of crushed concrete or reclaimed aggregate is acceptable only if the aggregate satisfies all aggregate requirements.
- The Contractor shall submit to the Engineer for approval, a grading of the combined aggregate proposed for use in the minor concrete. After acceptance of the grading, aggregate furnished for minor concrete shall conform to that grading, unless a change is authorized in writing by the Engineer.
- The Engineer may require the Contractor to furnish periodic test reports of the aggregate grading furnished. The maximum size of aggregate used shall be at the option of the Contractor, but in no case shall the maximum size be larger than 1 1/2-inch or smaller than 3/4-inch.
- The Engineer may waive, in writing, the gradation requirements in this Section 90-10.02B, if, in the Engineer's opinion, the furnishing of the gradation is not necessary for the type or amount of concrete work to be constructed.

90-10.02C WATER

- Water used for washing, mixing, and curing shall be free from oil, salts, and other impurities that would discolor or etch the surface or have an adverse affect on the quality of the concrete.

90-10.02D ADMIXTURES

- The use of admixtures shall conform to the provisions in Section 90-4, "Admixtures."

90-10.03 PRODUCTION

- Cementitious material, water, aggregate, and admixtures shall be stored, proportioned, mixed, transported, and discharged in conformance with recognized standards of good practice

that will result in concrete that is thoroughly and uniformly mixed, that is suitable for the use intended, and that conforms to requirements specified herein. Recognized standards of good practice are outlined in various industry publications such as are issued by American Concrete Institute, AASHTO, or the Department.

- The cementitious material content of minor concrete shall conform to the provisions in Section 90-1.01, "Description."
- The amount of water used shall result in a consistency of concrete conforming to the provisions in Section 90-6.06, "Amount of Water and Penetration." Additional mixing water shall not be incorporated into the concrete during hauling or after arrival at the delivery point, unless authorized by the Engineer.
- Discharge of ready-mixed concrete from the transporting vehicle shall be made while the concrete is still plastic and before stiffening occurs. An elapsed time of 1.5 hours (one hour in non-agitating hauling equipment), or more than 250 revolutions of the drum or blades, after the introduction of the cementitious material to the aggregates, or a temperature of concrete of more than 90° F will be considered conditions contributing to the quick stiffening of concrete. The Contractor shall take whatever action is necessary to eliminate quick stiffening, except that the addition of water will not be permitted.
- The required mixing time in stationary mixers shall be not less than 50 seconds or more than 5 minutes.
- The minimum required revolutions at mixing speed for transit-mixed concrete shall be not less than that recommended by the mixer manufacturer, and shall be increased, if necessary, to produce thoroughly and uniformly mixed concrete.
- When a high range water-reducing admixture is added to the concrete at the job site, the total number of revolutions shall not exceed 300.
- Each load of ready-mixed concrete shall be accompanied by a weighmaster certificate that shall be delivered to the Engineer at the discharge location of the concrete, unless otherwise directed by the Engineer. The weighmaster certificate shall be clearly marked with the date and time of day when the load left the batching plant and, if hauled in truck mixers or agitators, the time the mixing cycle started.
- A Certificate of Compliance conforming to the provisions in Section 6–1.07, "Certificates of Compliance," shall be furnished to the Engineer, prior to placing minor concrete from a source not previously used on the contract, stating that minor concrete to be furnished meets contract requirements, including minimum cementitious material content specified.

90-10.04 CURING MINOR CONCRETE

- Curing minor concrete shall conform to the provisions in Section 90-7, "Curing Concrete."

90-10.05 PROTECTING MINOR CONCRETE

- Protecting minor concrete shall conform to the provisions in Section 90-8, "Protecting Concrete," except the concrete shall be maintained at a temperature of not less than 40° F for 72 hours after placing.

90-10.06 MEASUREMENT AND PAYMENT

- Minor concrete will be measured and paid for in conformance with the provisions specified in the various sections of these specifications covering concrete construction when

minor concrete is specified in the specifications, shown on the plans, or indicated by contract item in the Engineer's Estimate.

90-11 MEASUREMENT AND PAYMENT

90-11.01 MEASUREMENT

- Portland cement concrete will be measured in conformance with the provisions specified in the various sections of these specifications covering construction requiring concrete.
- For concrete measured at the mixer, the volume in cubic feet shall be computed as the total weight of the batch in pounds divided by the density of the concrete in pounds per cubic foot. The total weight of the batch shall be calculated as the sum of all materials, including water, entering the batch. The density of the concrete will be determined in conformance with the requirements in California Test 518.

90-11.02 PAYMENT

- Portland cement concrete will be paid for in conformance with the provisions specified in the various sections of these specifications covering construction requiring concrete.
- Full compensation for furnishing and incorporating admixtures required by these specifications or the special provisions will be considered as included in the contract prices paid for the concrete involved and no additional compensation will be allowed therefor.
- Should the Engineer order the Contractor to incorporate any admixtures in the concrete when their use is not required by these specifications or the special provisions, furnishing the admixtures and adding them to the concrete will be paid for as extra work as provided in Section 4-1.03D, "Extra Work."
- Should the Contractor use admixtures in conformance with the provisions in Section 90-4.05, "Optional Use of Chemical Admixtures," or Section 90-4.07, "Optional Use of Air-entraining Admixtures," or should the Contractor request and obtain permission to use other admixtures for the Contractor's benefit, the Contractor shall furnish those admixtures and incorporate them into the concrete at the Contractor's expense and no additional compensation will be allowed therefor.

SECTION 91: PAINT

Issue Date: May 1, 2006

Section 91-3, "Paints for Timber," of the Standard Specifications is amended to read:

91-3 PAINTS FOR TIMBER

91-3.01 WOOD PRIMER, LATEX-BASE

Classification:

- This specification covers a ready-mixed priming paint for use on unpainted wood or exterior woodwork. It shall conform with the requirements in the Detailed Performance Standards of the Master Painters Institute (MPI) for exterior wood primers, and be listed on the Exterior Latex Wood Primer MPI List Number 6.

91-3.02 PAINT; LATEX-BASE FOR EXTERIOR WOOD, WHITE AND TINTS

Classification:

• This specification covers a ready-mixed paint for use on wood surfaces subject to outside exposures. This paint shall conform to the requirements in the Detailed Performance Standards of the Master Painters Institute (MPI) for Paint, Latex, Exterior, and shall be listed on the following MPI Approved Products List:

A. Exterior Latex, Flat MPI Gloss Level 1, MPI List Number 10.
B. Exterior Latex, Semi-Gloss, MPI Gloss Level 5, MPI List Number 11.
C. Exterior Latex, Gloss, MPI Gloss Level 6, MPI List Number 119.

• Unpainted wood shall first be primed with wood primer conforming to the provisions in Section 91-3.01, "Wood Primer, Latex-Base."

Section 91-4, "Miscellaneous Paints," of the Standard Specifications is amended to read:

91-4 MISCELLANEOUS PAINTS

91-4.01 THROUGH 91-4.04 (BLANK)

91-4.05 PAINT; ACRYLIC EMULSION, EXTERIOR WHITE AND LIGHT AND MEDIUM TINTS

Classification:

• This specification covers an acrylic emulsion paint designed for use on exterior masonry. This paint shall conform to the requirements in the Detailed Performance Standards of the Master Painters Institute (MPI) for Paint, Latex, Exterior, and shall be listed on the following MPI Approved Products Lists:

A. Exterior Latex, Flat MPI Gloss Level 1, MPI List Number 10.
B. Exterior Latex, Semi-Gloss, MPI Gloss Level 5, MPI List Number 11.
C. Exterior Latex, Gloss, MPI Gloss Level 6, MPI List Number 119.

• This paint may be tinted by using "universal" or "all purpose" concentrates.

SECTION 92: ASPHALTS

Issue Date: February 2, 2007

Section 92, "Asphalts," of the Standard Specifications is amended to read:

92-1.01 DESCRIPTION

• Asphalt is refined petroleum or a mixture of refined liquid asphalt and refined solid asphalt that are prepared from crude petroleum. Asphalt is:

1. Free from residues caused by the artificial distillation of coal, coal tar, or paraffin
2. Free from water
3. Homogeneous

92-1.02 MATERIALS

GENERAL

- Furnish asphalt under the Department's "Certification Program for Suppliers of Asphalt." The Department maintains the program requirements, procedures, and a list of approved suppliers at:

http://www.dot.ca.gov/hq/esc/Translab/fpmcoc.htm

- Transport, store, use, and dispose of asphalt safely.
- Prevent the formation of carbonized particles caused by overheating asphalt during manufacturing or construction.

GRADES

- Performance graded (PG) asphalt binder is:

Performance Graded Asphalt Binder

Property	AASHTO Test Method	Specification Grade				
		PG 58-22 [a]	PG 64-10	PG 64-16	PG 64-28	PG 70-10
Original Binder						
Flash Point, Minimum °C	T 48	230	230	230	230	230
Solubility, Minimum % [b]	T 44	99	99	99	99	99
Viscosity at 135°C, [c]	T 316					
Maximum, Pa·s		3.0	3.0	3.0	3.0	3.0
Dynamic Shear,	T 315					
Test Temp. at 10 rad/s, °C		58	64	64	64	70
Minimum G*/sin(delta), kPa		1.00	1.00	1.00	1.00	1.00
RTFO Test, [e]	T 240					
Mass Loss, Maximum, %		1.00	1.00	1.00	1.00	1.00
RTFO Test Aged Binder						
Dynamic Shear,	T 315					
Test Temp. at 10 rad/s, °C		58	64	64	64	70
Minimum G*/sin(delta), kPa		2.20	2.20	2.20	2.20	2.20
Ductility at 25°C	T 51					
Minimum, cm		75	75	75	75	75
PAV [f] Aging,	R 28					
Temperature, °C		100	100	100	100	110
RTFO Test and PAV Aged Binder						
Dynamic Shear,	T 315					
Test Temp. at 10 rad/s, °C		22 [d]	31 [d]	28 [d]	22 [d]	34 [d]
Maximum G*sin(delta), kPa		5000	5000	5000	5000	5000
Creep Stiffness,	T 313					
Test Temperature, °C		-12	0	-6	-18	0
Maximum S-value, Mpa		300	300	300	300	300
Minimum M-value		0.300	0.300	0.300	0.300	0.300

Notes:

a. Use as asphalt rubber base stock for high mountain and high desert area.

b. The Engineer waives this specification if the supplier is a Quality Supplier as defined by the Department's "Certification Program for Suppliers of Asphalt."

c. The Engineer waives this specification if the supplier certifies the asphalt binder can be adequately pumped and mixed at temperatures meeting applicable safety standards.

d. Test the sample at 3°C higher if it fails at the specified test temperature. G*sin(delta) remains 5000 kPa maximum.

e. "RTFO Test" means the asphaltic residue obtained using the Rolling Thin Film Oven Test, AASHTO Test Method T 240 or ASTM Designation: D 2872. The residue from mass change determination may be used for other tests.

f. "PAV" means Pressurized Aging Vessel.

- Performance graded polymer modified asphalt binder (PG Polymer Modified) is:

Performance Graded Polymer Modified Asphalt Binder [a]

Property	AASHTO Test Method	Specification Grade		
		PG 58-34 PM	PG 64-28 PM	PG 76-22 PM
Original Binder				
Flash Point, Minimum °C	T 48	230	230	230
Solubility, Minimum % [b]	T 44[c]	98.5	98.5	98.5
Viscosity at 135°C, [d] Maximum, Pa·s	T 316	3.0	3.0	3.0
Dynamic Shear, Test Temp. at 10 rad/s, °C Minimum G*/sin(delta), kPa	T 315	58 1.00	64 1.00	76 1.00
RTFO Test , Mass Loss, Maximum, %	T 240	1.00	1.00	1.00
RTFO Test Aged Binder				
Dynamic Shear, Test Temp. at 10 rad/s, °C Minimum G*/sin(delta), kPa	T 315	58 2.20	64 2.20	76 2.20
Dynamic Shear, Test Temp. at 10 rad/s, °C Maximum (delta), %	T 315	Note e 80	Note e 80	Note e 80
Elastic Recovery[f], Test Temp., °C Minimum recovery, %	T 301	25 75	25 75	25 65
PAV[g] Aging, Temperature, °C	R 28	100	100	110
RTFO Test and PAV Aged Binder				
Dynamic Shear, Test Temp. at 10 rad/s, °C Maximum G*sin(delta), kPa	T 315	16 5000	22 5000	31 5000
Creep Stiffness, Test Temperature, °C Maximum S-value, MPa Minimum M-value	T 313	-24 300 0.300	-18 300 0.300	-12 300 0.300

Notes:

a. Do not modify PG Polymer Modified using acid modification.

b. The Engineer waives this specification if the supplier is a Quality Supplier as defined by the Department's "Certification Program for Suppliers of Asphalt."

c. The Department allows ASTM D 5546 instead of AASHTO T 44

d. The Engineer waives this specification if the supplier certifies the asphalt binder can be adequately pumped and mixed at temperatures meeting applicable safety standards.

e. Test temperature is the temperature at which G*/sin(delta) is 2.2 kPa. A graph of log G*/sin(delta) plotted against temperature may be used to determine the test temperature when G*/sin(delta) is 2.2 kPa. A graph of (delta) versus temperature may be used to determine delta at the temperature when G*/sin(delta) is 2.2 kPa. The Engineer also accepts direct measurement of (delta) at the temperature when G*/sin(delta) is 2.2 kPa.

f. Tests without a force ductility clamp may be performed.

g. "PAV" means Pressurized Aging Vessel.

SAMPLING

- Provide a sampling device in the asphalt feed line connecting the plant storage tanks to the asphalt weighing system or spray bar. Make the sampling device accessible between 24 and 30 inches above the platform. Provide a receptacle for flushing the sampling device.
- Include with the sampling device a valve:

1. Between 1/2 and 3/4 inch in diameter
2. Manufactured in a manner that a one-quart sample may be taken slowly at any time during plant operations
3. Maintained in good condition

- Replace failed valves.
- In the Engineer's presence, take 2 one-quart samples per operating day. Provide round, friction top, one-quart containers for storing samples.

92-1.03 EXECUTION

- If asphalt is applied, you must comply with the heating and application specifications for liquid asphalt in Section 93, "Liquid Asphalts."

92-1.04 MEASUREMENT

- If the contract work item for asphalt is paid by weight, the Department measures asphalt tons by complying with the specifications for weight determination of liquid asphalt in Section 93, "Liquid Asphalts."
- The Engineer determines the asphalt weight from volumetric measurements if you:

1. Use a partial asphalt load
2. Use asphalt at a location other than a mixing plant and no scales within 20 miles are available and suitable
3. Deliver asphalt in either of the following:

    3.1. A calibrated truck with each tank accompanied by its measuring stick and calibration card
    3.2. A truck equipped with a calibrated thermometer that determines the asphalt temperature at the delivery time and with a vehicle tank meter complying with the specifications for weighing, measuring, and metering devices in Section 9-1.01, "Measurement of Quantities"

- If you furnish asphalt concrete from a mixing plant producing material for only one project, the Engineer determines the asphalt quantity by measuring the volume in the tank at the project's start and end provided the tank is calibrated and equipped with its measuring stick and calibration card.
- The Engineer determines pay quantities from volumetric measurements as follows:

1. Before converting the volume to weight, the Engineer reduces the measured volume to that which the asphalt would occupy at 60 °F.

2. The Engineer uses 235 gallons per ton and 8.51 pounds per gallon for the average weight and volume for PG and PG Polymer Modified asphalt grades at 60 °F.
3. The Engineer uses the Conversion Table in Section 93, "Liquid Asphalts."

SECTION 93: LIQUID ASPHALTS

Issue Date: November 3, 2006

The ninth paragraph of Section 93-1.04, "Measurement," of the Standard Specifications is amended to read:

• The following Legend and Conversion Table is to be used for converting volumes of liquid asphalt products, Grades 70 to 3000, inclusive, and paving asphalt Grades PG 58-22, PG 64-10, PG 64-16, PG 64-28, and PG 70-10, and Grades PG 58-34 PM, PG 64-28 PM, and PG 76-22 PM.

END OF AMENDMENTS

STANDARD PLANS LIST

Standard Plans List

The Standard Plan sheets applicable to this contract include, but are not limited to those indicated below. Applicable Revised Standard Plans (RSP) and New Standard Plans (NSP) indicated below are included in the project plans as individual Standard Plan sheets.

ACRONYMS, ABBREVIATIONS AND SYMBOLS

A10A	**Acronyms and Abbreviations (Sheet 1 of 2)**
A10B	**Acronyms and Abbreviations (Sheet 2 of 2)**
A10C	**Symbols (Sheet 1 of 2)**
A10D	**Symbols (Sheet 2 of 2)**

PAVEMENT MARKERS, TRAFFIC LINES, AND PAVEMENT MARKINGS

A20A	**Pavement Markers and Traffic Lines, Typical Details**
A20B	**Pavement Markers and Traffic Lines, Typical Details**
A20D	**Pavement Markers and Traffic Lines, Typical Details**
A24A	**Pavement Markings – Arrows**
A24B	**Pavement Markings – Arrows**
A24C	**Pavement Markings – Symbols and Numerals**
A24D	**Pavement Markings – Words**
A24E	**Pavement Markings – Words and Crosswalks**

EXCAVATION AND BACKFILL

A62F	**Excavation and Backfill – Metal and Plastic Culverts**

OBJECT MARKERS, DELINEATORS, CHANNELIZERS AND BARRICADES

A73A	**Object Markers**
A73B	**Markers**
A73C	**Delineators, Channelizers and Barricades**

FENCES

A85	**Chain Link Fence**
A86	**Barbed Wire and Wire Mesh Fences**

CURBS, DRIVEWAYS, DIKES, CURB RAMPS AND ACCESSIBLE PARKING

RSP A87A	**Curbs and Driveways**
A87B	**Asphalt Concrete Dikes**
RSP A88A	**Curb Ramp Details**

GUTTER AND INLET DEPRESSIONS

D78A	**Gutter Depressions**
D78C	**Inlet Depressions – Asphalt Concrete Shoulders**

PIPE DOWNDRAINS, ANCHORAGE SYSTEMS AND OVERSIDE DRAINS

D87D	**Overside Drains**

CONSTRUCTION LOADS ON CULVERTS AND STRUT DETAILS

D88	**Construction Loads on Culverts**

PIPE HEADWALLS, ENDWALLS AND WINGWALLS

D89	**Pipe Culver Headwalls – Straight and "L"**

FLARED END SECTIONS

D94A	**Metal and Plastic Flared End Sections**

PLANTING AND IRRIGATION

H1	**Planting and Irrigation – Abbreviations**
H2	**Planting and Irrigation – Symbols**
H3	**Planting and Irrigation Details**
H4	**Planting and Irrigation Details**
H5	**Planting and Irrigation Details**
H6	**Planting and Irrigation Details**
H7	**Planting and Irrigation Details**
H8	**Planting and Irrigation Details**
H9	**Planting and Irrigation Details**
H10	**Irrigation Controller Enclosure Cabinet**

TEMPORARY CRASH CUSHIONS, RAILING AND TRAFFIC SCREEN

T1A	**Temporary Crash Cushion, Sand Filled (Unidirectional)**
T2	**Temporary Crash Cushion, Sand Filled (Shoulder Installations)**
T3	**Temporary Railing (Type K)**

TEMPORARY TRAFFIC CONTROL SYSTEMS

T13	**Traffic Control System for Lane Closure on Two Lane Conventional Highways**

TEMPORARY WATER POLLUTION CONTROL

T51	**Temporary Water Pollution Control Details (Temporary Silt Fence)**
T52	**Temporary Water Pollution Control Details (Temporary Straw Bale Barrier)**
T53	**Temporary Water Pollution Control Details (Temporary Cover)**
T54	**Temporary Water Pollution Control Details (Temporary Erosion Control Blanket)**
T55	**Temporary Water Pollution Control Details (Temporary Erosion Control Blanket)**
T56	**Temporary Water Pollution Control Details (Temporary Fiber Roll)**
T57	**Temporary Water Pollution Control Details (Temporary Check Dam)**
T58	**Temporary Water Pollution Control Details (Temporary Construction Entrance)**

T59	**Temporary Water Pollution Control Details (Temporary Concrete Washout Facility)**
	SOUND WALLS
B15-1	**Sound Wall Masonry Block on Footing Detail (1)**
B15-2	**Sound Wall Masonry Block on Footing Detail (2)**
	ROADSIDE SIGNS
RS1	**Roadside Signs, Typical Installation Details No. 1**
RS2	**Roadside Signs – Wood Post, Typical Installation Details No. 2**
RS4	**Roadside Signs, Typical Installation Details No. 4**
	OVERHEAD AND ROADSIDE SIGNS PANELS
S93	**Framing Details for Framed Single Sheet Aluminum Signs, Rectangular Shape**
S94	**Roadside Framed Single Sheet Aluminum Signs, Rectangular Shape**
S95	**Roadside Single Sheet Aluminum Signs, Diamond Shape**
	ELECTRICAL SYSTEMS – SYMBOLS AND ABBREVIATIONS
ES-1A	**Electrical Systems (Symbols and Abbreviations)**
ES-1B	**Electrical Systems (Symbols and Abbreviations)**
ES-1C	**Electrical Systems (Symbols and Abbreviations)**
	ELECTRICAL SYSTEMS – SERVICE EQUIPMENT AND WIRING DIAGRAMS
ES-2A	**Electrical Systems (Service Equipment)**
ES-2C	**Electrical Systems (Service Equipment Notes, Type III Series)**
ES-2D	**Electrical Systems (Service Equipment and Typical Wiring Diagram, Type III – A Series)**
	ELECTRICAL SYSTEMS – CONTROLLER CABINETS
ES-3C	**Electrical Systems (Controller Cabinet Details)**
	ELECTRICAL SYSTEMS – SIGNAL HEADS, SIGNAL FACES AND MOUNTINGS
ES-4A	**Electrical Systems (Signal Heads and Mountings)**
ES-4B	**Electrical Systems (Signal Heads and Mountings)**
ES-4C	**Electrical Systems (Signal Heads and Mountings)**
ES-4D	**Electrical Systems (Signal Heads and Mountings)**
ES-4E	**Electrical Systems (Signal Faces and Mountings)**
	ELECTRICAL SYSTEMS – DETECTORS
ES-5A	**Electrical Systems (Detectors)**
ES-5B	**Electrical Systems (Detectors)**
ES-5C	**Electrical Systems (Detectors)**
ES-5D	**Electrical Systems (Detectors)**
	ELECTRICAL SYSTEMS – SIGNAL AND LIGHTING STANDARD, PUSH BUTTON POSTS AND TYPE 15TS STANDARD
ES-7A	**Electrical Systems (Signal and Lighting Standards, Push Button Posts**

	and Type 15TS Standard)
ES-7B	**Electrical Systems (Signal and Lighting Standard – Type 1 Standards and Equipment Numbering)**
RSP ES-7F	**Electrical Systems (Signal and Lighting Standard – Case 4 Arm Loading, Wind Velocity = 100 mph, Arm Lengths 25' to 45')**
RSP ES-7G	**Electrical Systems (Signal And Lighting Standard – Case 5 Arm Loading, Wind Velocity = 100 mph, Arm Lengths 50' to 55')**
ES-7H	**Electrical Systems (Signal and Lighting Standard – Case 5 Arm Loading, Wind Velocity = 100 mph, Arm Lengths 60' to 65')**
	ELECTRICAL SYSTEMS – SIGNAL AND LIGHTING STANDARD DETAILS
ES-7M	**Electrical Systems (Signal and Lighting Standards – Details No. 1)**
ES-7N	**Electrical Systems (Signal and Lighting Standards – Details No. 2)**
	ELECTRICAL SYSTEMS – PULL BOX DETAILS
ES-8	**Electrical Systems (Pull Box Details)**
	ELECTRICAL SYSTEMS – ISOFOOTCANDLE DIAGRAMS AND FOUNDATION DETAILS
ES-10	**Electrical Systems (Isofootcandle Diagrams)**
ES-11	**Electrical Systems (Foundation Installations)**
	ELECTRICAL SYSTEMS – SPLICING, WIRING DETAILS AND FUSE RATINGS
ES-13A	**Electrical Systems (Splicing Details)**
ES-13B	**Electrical Systems (Wiring Details and Fuse Ratings)**

ATTACHMENTS

Auburn-Folsom Road
Widening Project

Mitigation Monitoring and Reporting Program

State Clearinghouse Number 2002042036

Federal Lead Agency:

U.S. Department of the Interior Bureau of Reclamation
7794 Folsom Dam Road
Folsom, CA 95630
Contact: Sandi Richerson
916/989-7174

State Lead Agency:

Placer County
Department of Public Works 11444 B Avenue
DeWitt Center
Auburn, CA 95603
Contact: Edward G. McCarthy, PE.
530/886-7586

Environmental Consultant:

Dokken Engineering
2365 Iron Point Road, Suite 200
Folsom, CA 95630
Contact: Namat Hosseinion
916/858-0642

March 2004

Mitigation Monitoring and Reporting Program

Placer County, as the lead agency under the California Environmental Quality Act (CEQA), has developed a mitigation monitoring and reporting program (MMRP) for the Auburn-Folsom Road Widening Project. This MMRP is designed to ensure that the mitigation measures identified in the Environmental Assessment/Environmental Impact Report for the project are implemented.

Table I represents the MMRP. For each mitigation measure, Table I identifies:

- Mitigation Measure,
- Timing of Implementation,
- Implementing Party,
- Monitoring Party, and
- Verification Date and Signature

Placer County is responsible for implementing the measures listed in the MMRP.

Mitigation Measure	Timing	Implementing Party	Monitoring Party	Verification Date and Signature
Mitigation Measure P3.1: Prepare a Traffic Management Plan to Be Implemented during Construction: To avoid temporary disruption of traffic conditions during construction, the Placer County DPW shall develop and implement a traffic control plan for the project. The plan shall be designed to reduce the effects of construction on the roadway system throughout the construction period. The plan shall include provisions to discourage "cut-through" traffic on local streets. The plan shall also discourage the use of Barton Road as a parallel north-south street and detour traffic to Sierra College Boulevard. As feasible, at least one lane of traffic shall be maintained at all times. Proposed lane closures during the a.m. and p.m. commuting hours (6-9 a.m. and 3-6 p.m.) shall be minimized to the extent feasible. As feasible, pedestrian, equestrian, and bicycle access shall be maintained during construction. Construction areas shall be secured to prevent pedestrians, equestrians and bicyclists from entering the work area. This mitigation measure is common to all alternatives.	**Before construction**: Prepare traffic management plan. During construction: Implement traffic management plan, including measures to traffic and secure pedestrian areas.	Placer County Department of Public Works (DPW)	Placer County DPW	X_____
Mitigation Measure P3.2: Implement Strategies to Alleviate the Need to Widen Douglas Blvd to Six Lanes To address increased roadway capacity and increased traffic volumes at Douglas Boulevard - Auburn-Folsom Road to Barton Road (LOS E), Placer County DPW will implement strategies as part of the regular transportation planning and traffic engineering functions and alleviate the need to widen Douglas Boulevard to six lanes. The Southeast Placer County Transportation Study recommended alternative strategies to be implemented rather than widening Douglas Boulevard to six lanes. These strategies, endorsed by the Board of Supervisors in December 2000, included: • Work with PCTPA, SACOG, and neighboring jurisdictions to address a regional solution to the amount of through traffic in Granite Bay. • Add turn lanes at major intersections along Douglas Boulevard to provide LOS D. ▪ Potentially close some median openings along Douglas Boulevard to maintain its ability to carry traffic at higher levels of service. This mitigation measure is common to all alternatives.	**After construction**: Implement strategies: 1. Work with PCTPA, SACOG, and neighboring jurisdictions to address regional solution to amount of traffic in Granite Bay 2. Add turn lanes at major intersections along Douglas Boulevard. 3. Potentially close some median openings along Douglas Boulevard	Placer County DPW	Placer County DPW	X_____

Mitigation Measure	Timing	Implementing Party	Monitoring Party	Verification Date and Signature
Mitigation Measure P3.3a: Increase the Capacity at the Auburn-Folsom Road/Douglas Boulevard Intersection to Operate at an Acceptable LOS in 2020 : To address increased the cumulative affects of increased traffic volumes, the County will continue to monitor the LOS at the Auburn-Folsom Road/Douglas Boulevard intersection and construct new improvements as needed. The Board of Supervisors will approve intersection improvements at the Auburn-Folsom Road/Douglas Boulevard intersection that are included in the Capital Improvement Program that is funded by traffic mitigation fees in the Granite Bay area when funds are available and the need exists. The intersection improvements include provision of additional turn lanes as follows: ▪ a free right-turn lane on the eastbound approach ▪ two exclusive left-turn and two exclusive through lanes on the northbound approach two exclusive left-turn lanes on the eastbound approach	**After construction**: Monitor level of service (LOS) at Auburn-Folsom/Douglas Boulevard intersection; implement intersection improvements as needed.	Placer County DPW	Placer County Board of Supervisors	X_____
Mitigation Measure P3.3b: Implement Strategies to Alleviate the Need to Widen Douglas Boulevard to Six Lanes To address increased the cumulative affects of increased traffic volumes, Placer County DPW will implement strategies as part of the regular transportation planning and traffic engineering functions and alleviate the need to widen Douglas Boulevard to six lanes. *The Southeast Placer County Transportation Study* recommended alternative strategies to be implemented rather than widening Douglas Boulevard to six lanes. These strategies, endorsed by the Board of Supervisors in December 2000, included: ▪ Work with PCTPA, SACOG, and neighboring jurisdictions to address a regional solution to the amount of through traffic in Granite Bay ▪ Add turn lanes at major intersections along Douglas Boulevard to provide LOS D. ▪ Potentially close some median openings along Douglas Boulevard to maintain its ability to carry traffic at higher levels of service This mitigation measure is common to all alternatives	**After construction**: Implement strategies: 1. Work with PCTPA, SACOG, and neighboring jurisdictions to address regional solution to amount of traffic in Granite Bay. 2. Add turn lanes at major intersections along Douglas Boulevard 3. Potentially close some median openings along Douglas Boulevard.	Placer County DPW	Placer County DPW	X_____

Mitigation Measure	Timing	Implementing Party	Monitoring Party	Verification Date and Signature
Mitigation Measure P3.4: Install a Signal at the Auburn-Folsom Road/Lou Place Intersection to Allow Pedestrian/Equestrian Crossing To reconcile potential inconsistency with equestrian system policies in the Placer County General Plan and the Granite Bay Community Plan, the Placer County DPW will install a signal at the Auburn-Folsom Road/Lou Place intersection to facilitate pedestrian and equestrian movements across Auburn-Folsom Road into Folsom State Recreational Area. In the event that the Granite Bay Community Plan is modified to remove an equestrian trail along Lou Place and a crossing at Auburn-Folsom Road, the Placer County DPW has the option of installing a signal a crossing at Auburn-Folsom Road, the Placer County DPW has the option of installing a signal or not, at its discretion This mitigation measure is common to all alternatives.	**After construction:** Install traffic signal.	Placer County DPW	Placer County DPW	X_____
Mitigation Measure P3.5: Provide Class II Bikeways To reconcile potential inconsistency with pedestrian and bicycle system policies contained in the Placer County General Plan and the Granite Bay Community Plan, Placer County DPW shall provide Class II bikeways along Auburn-Folsom Road pursuant to the Placer County Bikeways Master Plan. The location, width, alignment, and surfacing of the bikeways shall be in accordance with the bikeway design standards listed in the Placer County General Plan.	**After construction**: Provide Class II bikeways along Auburn-Folsom Road	Placer County DPW	Placer County DPW	X_____
Mitigation Measure P4.1: Implement Best Available Mitigation Measures for Construction Activities To address temporary increases in ROG, NOx, and PM10 emissions during grading and construction activities, Placer County DPW will ensure the following: 1. Construction equipment exhaust emissions shall not exceed PCAPCD Rule 202 Visible Emission limitations. 2 Placer County DPW shall submit to PCAPCD, and receive approval of, a Construction Emission/Dust Control Plan before groundbreaking. 3. The prime contractor shall submit to PCAPCD a comprehensive inventory (listing make, model, year, emission rating) of all the heavy-duty off-road equipment (50 horsepower [hp] or greater) that will be used an aggregate of 40 or more hours for the project. PCAPCD personnel, with assistance from ARE, shall conduct initial Visible Emission Evaluations (VEEs) of all heavy-duty equipment on the inventory list. 4. Placer County DPW shall establish an enforcement plan to evaluate, on a weekly basis, project-related on- and-off-road heavy-duty vehicle engine emission opacities, using standards defined in 13 CCR 2180-2194. An Environmental Coordinator, ARB-certified to perform VEEs, shall routinely	**Before and during construction:** Implement best management practices (BMPs), including: 1. Ensure construction equipment exhaust emissions do not exceed Placer County Air Pollution Control District (PCAPCD) Rule 202 Visible Emission limitations. 2. Submit Construction Emission/Dust Control Plan to PCAPCD. 3. Submit comprehensive inventory listing of all heavy-duty on-road duty off-road equipment to PCAPCD.	Placer County DPW	Placer County DPW	X_____

Mitigation Measure	Timing	Implementing Party	Monitoring Party	Verification Date and Signature
evaluate project-related off-road and heavy duty on road equipment emissions for compliance with this requirement. Operators of vehicles and equipment found to exceed opacity limits shall be notified, and the equipment must be repaired within 72 hours of notification. 5. Construction contracts shall stipulate that at least 20% of the heavy-duty off-road equipment included in the inventory be powered by ARB-certified off-road engines, as follows: 175 hp—750 hp 1996 and newer engines 100 hp—174 hp 1997 and newer engines 50 hp—99 hp 1998 and newer engines In lieu of or in addition to this requirement, Placer County DPW can use other measures to reduce PM 10 and NO emissions from its project through the use of emulsified diesel fuel and/or particulate matter traps. PCAPCD shall be contacted to discuss this measure. 6. Placer County DPW shall conduct no open burning of removed vegetation during construction. Vegetative material shall be chipped or delivered to waste-to-energy facilities. 7. Placer County DPW shall ensure that earthmoving construction equipment is cleaned with water once per day 8. Placer County DPW shall ensure that soil binders are spread on unpaved roads and on employee/equipment parking areas. 9. Placer County DPW shall ensure that approved chemical soil stabilizers are applied, according to manufacturers' specifications, to all inactive construction areas (previously graded areas that remain inactive for 96 hours). 10. Placer County DPW shall ensure that ground cover is reestablished on the construction site as soon as possible through seeding and watering.	4. Establish enforcement plan to evaluate emission opacities. 5. Stipulate that at least 20% of heavy-duty off-road equipment be powered by ARB-certified off-road engines 6. Do not conduct open burning of removed vegetation. 7. Clean earthmoving equipment once a day. 8. Ensure that soil binders are spread on unpaved roads and parking areas. 9. Apply approved chemical soil stabilizers to all inactive construction areas. 10. Ensure reestablishment of ground cover on construction site.			

Mitigation Measure	Timing	Implementing Party	Monitoring Party	Verification Date and Signature
Mitigation Measure P5.1: Obtain a Section 402 NPDES Permit and Prepare an Erosion and Sediment Control Plan To address temporary degradation of surface water quality during construction, as required by the NPDES General Permit for Discharges of Storm Water Associated with Construction Activities, Placer County DPW shall prepare an erosion and sediment control plan. The plan shall be prepared and approved before construction activities begin. The following measures shall be addressed in the plan. 1. I. All graded areas shall be covered with protective materials, such as mulch, or reseeded with adaptive plant species. The plan shall include details regarding seed material, fertilizer, and mulching. 2. Protocols for the handling of construction and maintenance materials, such as sanitary wastes and petroleum products, shall be developed to minimize the chance of spill and to provide prompt corrective action should spill occur. 3. All graded areas and soil piles shall be mounded to minimize erosion potential. 4. Drainage outfalls shall be designed and positioned to avoid erosion. Energy dissipaters shall be installed where necessary. 5. Erosion control measures shall include best management practices (BMPs) to minimize water quality impacts; BMPs include filter berm, sandbag, or straw-bale barriers; siltation retention fences; vegetated buffer strips; vegetated swales; and spill containment provisions. 6. Temporary sediment catchment basins shall be constructed where necessary to prevent sediment from being transported to permanent detention basins and drainages. The locations and size of the temporary basins shall be shown in the erosion and sediment control plan. 7. Grading shall not be permitted after October 15 or before May 1. Grading may be permitted outside of these dates if the Director of DPW determines that such work can be completed before the onset of weather conditions that would prevent the work from being adequately winterized or completed. 8. Revegetation shall begin when the graded area has attained finished grade, but not later than October 1 (to ensure germination by October 30).	**Before construction**: Prepare and Erosion and Sediment Control Plan. **During construction**: Implement Erosion and Sediment Control Plan: 1. Cover all graded areas with protective materials. 2. Develop protocols for handling construction and maintenance materials 3. Mound all graded areas and soil piles 4. Design and position drainage outfalls to minimize erosion. 5. Adopt erosion control BMPs. 6. Construct temporary sediment catchments where necessary. 7. Do not grade after October 15 or before May 1. 8. Begin revegetation when graded area has attained finished grade, but no later than October 1.	Placer County DPW	Placer County DPW	X_____ X_____

Mitigation Measure	Timing	Implementing Party	Monitoring Party	Verification Date and Signature
Mitigation Measure P5.2: Prepare a Drainage Report To address the change in soil absorption rates, drainage patterns, and the rate and amount of runoff, Placer County DPW shall prepare a drainage report in conformance with the requirements of Section 5 of the Land Development Manual (LDM) and the Placer County Storm Water Management Manual that are in effect at the time of submittal. The drainage report shall be submitted to the DPW for review and approval. The report shall be prepared by a Registered Civil Engineer and shall, at a minimum, include a written text addressing existing conditions, the effects of the improvements, all appropriate calculations, a watershed map increases in downstream flows, and proposed onsite and offsite improvements and drainage easements to accommodate flows from the project. The report shall address storm drainage during construction and thereafter, and shall propose BMPs to reduce erosion and water quality degradation. The existing culvert at Linda Creek shall be evaluated in the drainage report for condition and capacity and shall be upgraded, replaced, or mitigated as specified by DPW. All stormwater drainage facilities shall be designed in accordance with the requirements of the County Storm Water Management Manual that are in effect at the time of submittal, and to the satisfaction of DPW. These facilities shall be constructed with project improvements and easements provided as required by DPW. Maintenance of these facilities shall be the responsibility of Placer County. PCFCWCD recommends using a minimum design peak flow rate of 510 cfs for the sizing of any proposed culverts at Auburn-Folsom Road. it is PCFCWCD's opinion that increasing the size of the existing culvert to prevent overtopping of the roadway during 100-year storm events would be beneficial to the area. The 1992 Dry Creek Watershed Flood Control Plan based its bridge/culvert replacement recommendations on passing the 100-year peak flow with no freeboard. Based on this, PCFCWCD would accept a culvert design that passes the future 100-year peak flow rate of 510 cfs with minimal freeboard below the proposed roadway. The drainage report will analyze the pre- and post development water surface elevations for 2-, 10-, *25*-, and 100-year storm events for future culvert proposals.	**Before construction**: Prepare drainage report. **During construction:** Implement identified BMPs.	Registered Civil Engineer Placer County DPW	Placer County DPW Placer County DPW	X_____ X_____

Mitigation Measure	Timing	Implementing Party	Monitoring Party	Verification Date and Signature
Mitigation Measure P5.3: Prepare a Postconstruction Storm Water Pollution Prevention Placer County Placer County Plan To address postconstruction degradation of surface water quality; Placer County DPW shall prepare a Storm Water Pollution Prevention Plan (SWPPP). The plan must include BMPs. Proposed BMPs are listed below. 1. Vegetate swales to minimize and decelerate flows and collect pollutants and suspended sediments. 2. Establish and maintain vegetation in swales and drainage ways to achieve an optimal balance of conveyance and water quality protection characteristics. 3. Install velocity dissipaters, rip-rap, and/or other appropriate devices to slow runoff, promote deposition of waterborne particles, and reduces the erosion potential of storm flows.	**Before construction**: Prepare Storm Water Pollution Prevention Plan (SWPPP). **During construction**: Implement BMPs: 1. Vegetate swales. 2. Establish and maintain vegetation in swales and drainageways. 3. Install velocity dissipaters, rip-rap, and/or other devices to slow runoff.	Placer County DPW Placer County DPW	Placer County DPW Placer County DPW	X_____ X_____

Mitigation Measure	Timing	Implementing Party	Monitoring Party	Verification Date and Signature
Mitigation Measure P6.la: Implement Sound Control Requirements To address the exposure of noise-sensitive land uses (residences and campgrounds) to construction noise, sound control shall conform to the provisions in Section 7-1.011, "Sound Control Requirements," of the Placer County Standard Specifications. The noise level from the contractor's operations and all construction activities, between the hours of 9:00 p.m. and 6:00 am., shall not exceed 86 cIBA at a distance of 15 meters (50 feet) from the construction area. This requirement is no way relieves the contractor from responsibility for complying with local ordinances regulating noise level. For blasting and drilling operations, Placer County DPW and its contractors shall limit operations to the period between 6:00 a.m. and 8:00 p.m. Monday through Friday and between 8:00 am. and 6:00 p.m. on Saturdays. No blasting or drilling shall be conducted on Sundays or on federal holidays All equipment shall have sound-control devices no less effective than those provided on the original equipment. No equipment shall have an unmuffled exhaust. As directed by the engineer, the contractor shall implement appropriate additional noise mitigation measures including, but not limited to, shutting off idling equipment and sending additional notifications of adjacent residents. Said noise level requirements shall apply to all equipment on the job or related to the project, including, but not limited to, trucks, transit mixers, and transient equipment that may or may not be owned by the contractor. The use of loud sound signals shall be avoided in favor of light warnings, excepting those required by safety laws for the protection of personnel.	**During construction:** Implement sound control procedures.	Construction Team	Placer County DPW	X_____
Mitigation Measure P6.lb: Locate Equipment as Far from Noise-Sensitive Receivers as Practicable To address the exposure of noise-sensitive land uses (residences and campgrounds) to construction noise, Placer County DPW shall locate all stationary noise-generating equipment, such as pumps and generators, as far as possible from nearby noise-sensitive receivers. Where practicable, nearby noise-sensitive receivers shall be shielded from noise-generating equipment using noise-attenuating buffers, such as structures or haul-truck trailers. Stationary noise sources located less than 91 meters (300 feet) from noise-sensitive receivers shall be equipped with noise-reducing engine housings. Portable acoustical barriers shall be placed around noise- generating equipment located within 61 meters (200 feet) of residences. Water tanks and equipment storage, staging, and warm-up areas shall be located as far from noise-sensitive receivers as possible.	**During construction**: Locate equipment far from noise-sensitive receivers.	Construction Team	Placer County DPW	X_____

Mitigation Measure	Timing	Implementing Party	Monitoring Party	Verification Date and Signature
Mitigation Measure P6.1c: Use Sound-Control Devices on Combustion-Powered Equipment To address the exposure of noise-sensitive land uses (residences and campgrounds) to construction noise, Placer County DPW shall ensure that all construction equipment powered by gasoline or diesel engines have sound-control devices at least as effective as those originally provided by the manufacturer. All equipment shall be operated and maintained to minimize noise generation. No equipment shall be permitted to have an unmuffled exhaust	**During construction**: Ensure use of sound-control devices for equipment	Placer County DPW	Placer County DPW	X_____
Mitigation Measure P6.1d: Shield/Shroud Any Impact Tools To address the exposure of noise-sensitive land uses (residences and campgrounds) to construction noise, any impact tools used during demolition of existing infrastructure shall be shrouded or shielded.	**During construction**: Shield or shroud impact tools.	Construction Team	Placer County DPW	X_____
Mitigation Measure P6.1e: Shut Off Machinery when Not in Use To address the exposure of noise-sensitive land uses (residences and campgrounds) to mobile noise-generating equipment and machinery shall be shut off when not in use.	**During construction**: Turn off mobile noise generating equipment when not in use.	Construction Team	Placer County DPW	X_____
Mitigation Measure P6.1f: Use Shortest Traveling Routes, when Practicable To address the exposure of noise-sensitive land uses (residences and campgrounds) to construction noise, Placer County DPW shall require that construction vehicles accessing the project area use the shortest route possible to and from local freeways provided that the routes do not expose additional receivers to noise.	**During construction:** Use shortest traveling routes.	Construction Team	Placer County DPW	X_____
Mitigation Measure P6.lg: Disseminate Essential Information to Residences and Implement a Complaint Response/Tracking Program To address the exposure of noise-sensitive land uses (residences and campgrounds) to construction noise, Placer County DPW shall send a notification of the construction schedule to people with residences and the operators of Beals Point Campground within 152 meters (500 feet) of the construction area. The notification shall be in writing and shall be delivered before construction. Placer County DPW and the construction contractor shall designate a noise disturbance coordinator, who shall be responsible for responding to complaints about construction noise. The coordinator shall determine the cause of each complaint and shall ensure that reasonable measures are implemented to correct the problem. A contact telephone number for the noise disturbance coordinator shall be posted conspicuously on construction site fences and shall be included in the written notification of the construction schedule sent to nearby residents.	**Before construction**: Deliver construction schedule to area residents **During construction**: Provide contact telephone number for complaints, research problems and ensure reasonable measures to correct problems.	Placer County DPW	Placer County DPW	X_____

Mitigation Measure	Timing	Implementing Party	Monitoring Party	Verification Date and Signature
Mitigation measure P6.1h: Implement Additional Mitigation Measures , as Needed and/or Required To address the exposure of noise-sensitive land uses (residences and campgrounds) to construction noise, throughout the construction period, the construction contractor shall implement additional noise mitigation measures at the request of Pacer County DPW. Additional measures may include changing the location of stationary noise-generation equipment, shutting off idling equipment, rescheduling construction activities, installing acoustical barriers around stationary sources of construction noise, temporarily relocating residents where feasible, using alternative equipment or construction methods that produce less noise, or other site-specific measures as appropriate.	**During construction:** Implement additional noise mitigation measurements.	Construction Team	Placer County DPW	X_____
Mitigation Measure P6.2: Employ Measures to Reduce Airblast and Vibration from Blasting To address the exposure of residences and campgrounds to airblast and vibration from blasting, the project contractor shall retain a qualified blasting specialist to develop a site-specific blasting program report to assess, control, and monitor airblast and ground vibration from blasting. The report shall be reviewed and approved by Placer County DPW before issuance of a blasting permit. The report shall include, at minimum following measures. 1. The contractor shall use current state-of-the-art technology to keep blast-related vibration at offsite residential and other occupied structures as low as possible, consistent with blasting safety. In no instance shall blast vibration, measured on the ground adjacent to a residential or other occupied structure, be allowed to exceed the frequency-dependent limits specified in the Alternative Blasting Level Criteria contained in U.S. Bureau of Mines (USBM) Report of Investigations 8507. 2. The project contractor shall use current state-of-the-art technology to keep airblast at offsite residential and other occupied structures as low as possible. In no instance shall airblast, measured at a residence or other occupied structure, be allowed to exceed the 0.013-pounds per square inch (psi) (133-dB) Limit recommended in USBM Report of Investigations 8485. 3. The project contractor shall monitor and record airblast and vibration for blasts within 305 meters (1,000 feet) of residences and other occupied structures to verify that measured levels are within the recommended limits at those locations. The contractor shall use blasting seismographs containing three channels that record in thee mutually perpendicular axes and which have a fourth channel for recording airblast. The frequency response of the instrumentation shall be from 2 to 250 Hertz (Hz), with a minimum sampling rate of 1,000 samples per second	**Before construction:** Develop blasting program report. **During construction:** Implement measures recommended by the report.	Blasting Specialist Construction Team	Placer County DPW Placer County DPW	X_____ X_____

Mitigation Measure	Timing	Implementing Party	Monitoring Party	Verification Date and Signature
per channel. The recorded data must be such that the frequency of the vibrations can be determined readily. if blasting is found to exceed specified levels, blasting shall cease, and alternative blasting or excavation methods shall be employed that result in the specified levels not being exceeded. Airblast and vibration monitoring shall take place at the nearest offsite residential or other occupied structure. If vibration levels are expected to be lower than those required to trigger the seismograph at that location, or if permission cannot be obtained to record at that location, recording shall be accomplished at some closer site in line with the structure. Specific locations and distances where airblast and vibration are measured shall be documented in detail along with measured airblasts and vibration amplitudes.				
Mitigation Measure P6.3: Use Noise-Reducing Pavement To address exposure of noise-sensitive land uses (residences and campgrounds) to increased traffic noise levels, Placer County DPW shall place noise-reducing open-graded asphalt pavement or equivalent throughout the project area. Placer County DPW shall consult staff from Sacramento County and Caltrans to identify the formulation specifications for the open-graded asphalt that are most effective in reducing traffic noise. The pavement type selected shall have a minimum sound reduction capacity of 3 dB, based on long-term weathered conditions.	**During construction**: Place noise-reducing open-graded asphalt pavement throughout project area	Placer County DPW	Placer County DPW	X_____
Mitigation Measure P7.la: Preserve Existing Trail Access Points in Project Design To reconcile potential inconstancies with local goals and policies, Placer County DPW shall ensure that any existing trailheads within the construction corridor are preserved or reconstructed after the project is complete.	**During construction**: Preserve existing trailheads. **After construction:** Reconstruct trailheads as needed	Placer County DPW	Placer County DPW	X_____
Mitigation Measure P7.lb: Provide Class II Bikeway To reconcile potential inconstancies with local goals and policies, Placer County DPW shall provide a Class II bikeway along Auburn-Folsom Road pursuant to the Placer County Bikeways Master Plan. The location, width, alignment, and surfacing of the bikeway shall be in accordance with the bikeway design standards listed in the Placer County General Plan.	**After construction:** Provide a Class II bikeway along the Auburn-Folsom Road.	Placer County DPW	Placer County DPW	X_____

Mitigation Measure	Timing	Implementing Party	Monitoring Party	Verification Date and Signature
Mitigation Measure P7.lc: Revegetate All Disturbed Areas To reconcile potential inconstancies with local goals and policies, Placer County DPW or an approved contractor shall revegetate all disturbed areas. Revegetation undertaken between April 1 and October 1 shall include regular watering to ensure adequate growth. A winterization plan shall be provided with project improvement Plans. It is Placer County DPW's responsibility to ensure proper installation and maintenance of erosion control/winterization during project construction. Placer County DPW shall provide for erosion control where roadside drainage is off of the pavement. Placer County DPW shall maintain a letter of credit, surety bond, or cash deposit in the amount of 100% of an approved engineer's estimate for winterization and permanent erosion control work before Improvement Plan approval to guarantee protection against erosion and improper grading practices.	**After construction**: Revegetate disturbed areas.	Placer County DPW	Placer County DPW	X_____
Mitigation Measure P7.3a: Select Street Lights to Minimize Exposure to Glare and Light To address increases in glare, streetlight(s), designed in accordance with the *American National Standard Practice for Roadway Lighting Manual*, shall be provided and installed to the satisfaction of Placer County DPW and PG&E at intersections along the project corridor, as needed. Streetlights shall be of a type, height, and design to direct lighting downward, shielding, to the greatest extent practical, light exposure beyond that needed for proper intersection lighting.	**During construction**: Provide and use streetlights designed to minimize excess glare/nighttime lighting	Construction team	Placer County PWD	X_____
Mitigation Measure P7.3b: Construct Fence between Affected Residences and Roadway To address potential degradation of views and increases in glare, Placer County DPW shall construct a solid fence between the new roadway and the two affected residences. The fence shall be constructed of a solid, opaque material that is visually cohesive with the surrounding structures and landscape. The fence shall be high enough to block direct headlight glare.	**During construction:** Construct a solid fence between the new roadway and affected residences.	Construction team	Placer County PWD	X_____
Mitigation Measure P7.4a: Obtain a Tree Permit To address the potential degradation of visual quality resulting from tree removal, before any construction activity, including grading or other site disturbance, Placer County DPW shall acquire a Tree Permit for the removal of trees 15 centimeters (6 inches) dbh or larger and multitrunked d trees with an aggregate diameter of 30 centimeters (10 inches) dbh or more.	**Before construction:** Acquire Tree Permit.	Placer County DPW	Placer County DPW	X_____

Mitigation Measure	Timing	Implementing Party	Monitoring Party	Verification Date and Signature
Mitigation Measure P7.4b: Mitigate Tree Removal To address the potential degradation of visual quality resulting from tree removal, trees identified for removal and trees with disturbance within their driplines shall be replaced along the corridor as feasible Trees removed from Reclamation property shall be replaced on Reclamation property on an inch-by-inch basis. For example, if 254 centimeters (100 inches) of tree diameter are proposed to be removed, the replacement trees shall be equal to 254 centimeters (100 inches) in diameter (aggregate). If feasible, seedlings should be from acorns collected within 30 miles of the project location in Placer or Sacramento Counties in the American River watershed and between the elevations of 100 and 800 feet. A 3-year monitoring and maintenance plan for the trees and any irrigation shall be required. The expectation is that there will be 100% survival for the replacement trees at the end of 3 years. In lieu of 50% of the mitigation for tree removal that is not on Reclamation property, a contribution to the Placer County Tree Preservation Fund shall be required. The value is based on 50% of the overall replacement estimate, which shall be submitted to the Placer County Development Review Committee (DRC) for review and approval. The trees shall be installed by the contractor and inspected and approved by Placer County DPW before completion of the project. At its discretion, the DRC may establish an alternate deadline for installation of replacement trees if weather or other circumstances prevent the completion of this requirement before completion of the project. For native trees removed from private lands, Placer County DPW may either replace the trees on the private lands with one 15-gallon native tree for each tree removed or contribute money into the Placer County Tree Preservation Fund.	**After construction:** Replace trees removed or disturbed during construction	Placer County DPW	Placer County DPW	X_____
Mitigation Measure P7.4c: Revegetate and Restore All Disturbed Areas to Minimize Visual Quality Impacts and Provide Screening To address the potential degradation of visual quality resulting from tree removal, Placer County DPW or an approved contractor shall revegetate and restore all disturbed areas, Revegetation undertaken between April 1 and October 1 shall include regular watering to ensure adequate growth. Restoration of trees and shrubs shall provide the screening for affected properties Revegetation of disturbed areas shall be consistent with the surrounding area. The County DPW shall prepare a restoration and revegetation plan for the trees and vegetation removed from Reclamation property. This plan shall address the	**Before construction:** Prepare a restoration and revegetation plan. **After construction**: Revegetate and restore disturbed areas.	Placer County DPW	Placer County DPW	X_____

Mitigation Measure	Timing	Implementing Party	Monitoring Party	Verification Date and Signature
mitigation of the removal of oaks and other trees from Reclamation property. The plan shall be prepared in consultation with Reclamation and shall provide screening to mitigate the increased visibility of the roadway from recreation facilities (campgrounds and trails).				
Mitigation Measure P7.5: Enhance Aesthetics of Retaining Walls, Soundwalls, and Other - Structural Elements To address the potential degradation of visual quality resulting from cuts) grading, and other changes in topography, Placer County DPW shall design and construct the visible surfaces of vertical, linear structural elements, including all retaining walls and sound walls, to maximize aesthetic appearance and1to achieve visual unity with the existing landscape character. The design shall be unified with the existing landscape in terms of color, proportion, texture, and material types and finishes. Design features that may be used to achieve enhanced aesthetics include: I. horizontal and vertical articulation of linear features to visually break up large masses (e.g., terracing sections of retaining walls or offsetting sections of soundwalls); 2. use of rough-textured surfaces to minimize glare, reduce potential for graffiti, and blend with the rugged appearance of the natural vegetation and rock outcrops; 3. use of native vegetation incorporated into retaining walls and as a screen for other structural elements; 4. use of warm, earthy hues; and 5. consistent architectural detailing among all structural elements to unify the roadway corridor.	**Before construction**: Design all visible surfaces of vertical and linear elements to be aesthetically pleasing. **During construction**: Implement design strategies.	Placer County DPW Placer County DPW	Placer County DPW Placer County DPW	X_____ X_____
MitigationMeasureP8.la: Obtain a Section 404 Permit from the Corps To address potential disturbance or loss of waters of the United States, Placer County DPW will obtain a Clean Water Act Section 404 permit from the Corps before beginning any grading, clearing, or excavation. The project is subject to review and approval by the Corps.	**Before construction**: Obtain a Clean Water Action Section 404 permit.	Placer County DPW	Corps	X_____
Mitigation Measure P8.lb: Obtain a Section 401 Water Quality Certification or Waiver from the Central Valley RWQCB To address potential disturbance or loss of waters of the United States, Placer County DPW will obtain a Clean Water Act Section 401 certificate or waiver from the RWQCB before beginning any grading, clearing, or excavation. As a condition of the Section 404 permit, the project is subject to review and approval by the Central Valley RWQCB.	**Before construction**: Obtain a Clean Water Act Section 401 certification or waiver.	Placer County DPW	Corps	X_____

Mitigation Measure	Timing	Implementing Party	Monitoring Party	Verification Date and Signature
Mitigation Measure P8.lc: Obtain a Section 1602 Streambed Alteration Agreement from DFG To address potential disturbance or loss of waters of the United States, Placer County DPW will obtain a streambed alteration agreement from DFG before beginning any grading, clearing, or excavation. The project is subject to review by DFG.	**Before construction**: Obtain a streambed alteration agreement from the California Department of Fish and Game (DFG).	Placer County DPW	DFG	X_____
Mitigation Measure P8.ld: Pay Appropriate Environmental Document Review Fee To address potential disturbance or loss of waters of the United States, Placer County DPW will pay the appropriate environmental document fees to DFG. Pursuant to Section 21089(b) of the California Public Resources Code and Section 711.4 et seq. of the California Fish and Game Code, the approval of this project shall not be considered final unless the specified fees are paid to DFG. The fees currently required are $880 for projects with environmental impact reports and $1,280 for projects with negative declarations; however, the actual fee paid will be that in effect at the time payment occurs. Without the appropriate fee, the Notice of Determination (which the County is required to file within 5 days of project approval) is not operative, vested, or final, and shall not be accepted by the County Clerk.	**Before construction:** Pay appropriate environmental document review fee to DFG.	Placer County DPW	DFG	X_____
Mitigation Measure P8.le: Install Temporary Construction Fencing to Protect Wetlands To address potential disturbance or loss of waters of the United States, Placer County DPW shall install a 1.2-meter-tall (4-foot-tall), brightly colored (usually yellow or orange), synthetic mesh-material fence (or an equivalent approved by the Development Review Committee [DRC]) at the following location before allowing any construction equipment to be moved onto the site and before any construction activities take place. I. Adjacent to any and all wetlands, drainages, and creeks that are within 15.2 meters (50 feet) of any proposed construction activity No construction activities, including grading, shall be allowed until this condition is satisfied. Any encroachment within wetland areas must first be approved by the DRC. No grading, clearing, or storage of equipment or machinery, or similar activity, may occur until a representative of the DRC has inspected and approved all temporary construction fencing. This restriction applies to both onsite and offsite improvements. The temporary fencing shall be maintained until all construction activities are complete. No grading, trenching, or movement of construction equipment shall be allowed within fenced areas.	**Before construction:** Install temporary construction fencing to protect wetlands.	Placer County DPW	Placer County DPW	X_____

Mitigation Measure	Timing	Implementing Party	Monitoring Party	Verification Date and Signature
Mitigation Measure P8.1f: Avoid and Minimize Disturbance of Waters of the United States, Including Wetlands To address potential disturbance or loss of waters of the United States, to the extent possible, Placer County DPW shall avoid and minimize impacts on waters of the United States (including wetlands) by implementing the following measures. 1. Redesign or modify the project to avoid direct and indirect impacts on wetlands and streams, if feasible. 2. Avoid construction activities in saturated or ponded wetlands and streams during the wet season (spring and winter) to the maximum extent possible. Where such activities are unavoidable, protective practices, such as use of padding or vehicles with balloon tires, shall be employed. 3. Where determined necessary by resource specialists, use geotextile cushions and other materials (e.g., timber pads, prefabricated equipment pads, geotextile fabric) in saturated conditions to minimize damage to the substrate and vegetation. 4. Stabilize exposed slopes and streambanks immediately upon completion of construction activities. Other waters of the United States shall be restored in a manner that encourages vegetation to reestablish to its preproject condition and reduces the effects of erosion on the drainage system. 5. In highly erodible stream systems, stabilize banks using a nonvegetative material that will bind the soil initially and break down within a few years. If the project engineers determine that more aggressive erosion control treatments are needed, use geotextile mats, excelsior blankets, or other soil stabilization products. 6. During construction, remove trees, shrubs, debris, or soils that are inadvertently deposited below the ordinary high-water mark of streams in a manner that minimizes disturbance of the drainage bed and bank. 7. In-stream construction within the ordinary high-water mark of Linda Creek shall be restricted to the low-flow period of April through October. 8. All activities shall be completed promptly to minimize their duration and resultant impacts. These measures shall be incorporated into contract specifications and implemented by the construction contractor.	**During construction:** Minimize disturbance of waters of the United States by implementing BMPs.	Construction Team	Placer County DPW	X_____
Mitigation Measure P8.lg: Confine Construction Equipment and Associated Activities to the Designated Work Zone in Areas That Support Wetland Resources To address potential disturbance or loss of waters of the United States, construction equipment shall be confined to a designated work zone (that	**During construction:** Confine construction equipment and associated activities to designated work zones	Construction team	Placer Count DPW	X_____

Mitigation Measure	Timing	Implementing Party	Monitoring Party	Verification Date and Signature
includes access roads) along the project corridor. Before construction begins, the work zone shall be clearly staked and flagged. During construction, construction monitors and resource monitors shall ensure that construction equipment and associated activities avoid disturbing sensitive resources outside the designated work zones.				
Mitigation Measure P8.lh: Compensate for the Loss of Waters of the United States To address potential disturbance or loss of waters of the United States, if waters of the United States (including wetlands) are filled as part of the project, Placer County DPW shall compensate for permanent impacts to ensure no net loss of habitat functions and values. The compensation shall be provided at a minimum ratio of 2:1 (2 acres restored or created for every 1 acre filled) and may be a combination of onsite restoration/creation, offsite restoration, or mitigation credits. Compensation ratios shall be based on site-specific information and determined through coordination with state and federal agencies, as part of the permitting process for the project. Compensation options are presented below; however, any wetlands affected on Reclamation land must be restored on Reclamation land. 1. Purchase mitigation bank credits at a USE WS-approved ecosystem preservation bank. Wildland's Sheridan Ranch Conservation Bank in Placer County ranges from $44,000/acre for wetland mitigation. Before approval of the Improvement Plans, Placer County DPW shall provide written evidence to the DRC that compensatory habitat has been established through the purchase of mitigation credits. The amount to be paid shall be the fee that is in effect at the time the fee is paid. The estimated fee per alternative is as follows. Alternative 1: Widen Roadway to the West $7,392 Alternative 2: Widen Roadway to the East $8,360 Alternative 3: Widen Roadway Equally on Both Sides S6,600 Alternative 4: County DPW—Preferred Alternative $8,800 OR 2. Contribute funds, equal to the amount needed to purchase mitigation bank credits, to restoration of wetlands and other waters in the Folsom Lake SRA, American River corridor, or other nearby lands that are publicly managed and will be protected in perpetuity. Placer County DPW shall coordinate with appropriate individuals to determine whether there is a potential to create, restore,	**After construction**: Compensate for loss of waters of the United States.	Placer County DPW	Placer County DPW	X_____

Mitigation Measure	Timing	Implementing Party	Monitoring Party	Verification Date and Signature
or enhance waters of the United States at nearby preserved lands. OR 3. Develop a wetland restoration plan that involves creating or enhancing wetland habitat on site or next to the project area. Potential creation and enhancement sites shall be evaluated by the County and Reclamation to determine whether this is a feasible option. If Placer County DPW determines that onsite or offsite restoration is possible, a restoration plan will be developed that describes where and when restoration will occur and who will be responsible for developing, implementing, and monitoring the restoration plan. When this option is selected, restoration will be selected in an appropriate area in close proximity to the project area.				

Mitigation Measure	Timing	Implementing Party	Monitoring Party	Verification Date and Signature
Mitigation Measure P8.2a: Install Temporary Construction Fencing to Protect Trees To address the potential loss or disturbance of valley foothill riparian forest, Placer County DPW shall install a 1.2-meter-tall (4-foot-tall), brightly colored (usually yellow or orange), synthetic mesh—material fence (or an equivalent approved by the DRC) at the following location before allowing any construction equipment to be moved onto the site and before any construction activities take place. 1. At the limits of construction, outside the dripline of all trees that are 15.2 centimeters (6 inches) dbh (diameter at breast height), or 25.4 centimeters (10 inches) dbh aggregate for multitrunk trees, within 15.2 meters (50 feet) of any grading, road improvements, underground utilities, or other development activity, or as otherwise shown on the site plan. All trees that are to be saved shall be fenced. No construction activity, including grading, shall be allowed until this condition is satisfied. Any encroachment within these areas, such as within the driplines of trees to be saved, must first be approved by the DRC. No grading, clearing, or storage of equipment or machinery, or similar activity, may occur until a representative of the ORC has inspected and approved all temporary construction fencing. The temporary fencing shall be maintained until all construction activities are complete. No grading, trenching, or movement of construction equipment shall be allowed within fenced areas. Protection for native trees on slopes shall include installation of a silt fence. A silt fence shall be installed at the upslope base of the protective fence to prevent soil from drifting down over the root zone. Efforts shall be made to save trees where feasible. These efforts may include the use of retaining walls or other techniques commonly associated with tree preservation. The temporary construction fencing and a note reflecting this condition shall be shown on the Improvement Plans.	**Before construction**: Install temporary construction fencing to protect trees.	Construction team	Placer County PWD	X_____

Mitigation Measure	Timing	Implementing Party	Monitoring Party	Verification Date and Signature
Mitigation Measure P8.2b: Compensate for Permanent Impacts on Riparian Communities To address the potential loss or disturbance of valley foothill riparian forest, Placer County DPW shall compensate for permanent impacts on riparian communities by implementing one or a combination of the following options. The compensation shall be provided at a minimum ratio of 2:1 (2 acres restored or created for every 1 acre filled) and may be a combination of onsite restoration/creation, offsite restoration, or mitigation credits. Compensation ratios shall be based on site-specific information and determined through coordination with state and federal agencies, as part of the permitting process for the project. Compensation options are presented below; however, any riparian communities affected on Reclamation land must be restored on Reclamation land. 1. Purchase mitigation bank credits at a locally approved bank. Wildland' s Sheridan Ranch Conservation Bank in Placer County ranges from $49,000/acre for riparian mitigation. Before approval of the Improvement Plans, Placer County DPW shall provide written evidence to the DRC that compensatory habitat has been established through the purchase of mitigation credits. The amount to be paid shall be the fee that is in effect at the time the fee is paid. The estimated fee per alternative is as follows. Alternative 1: Widen Roadway to the West $4,900 Alternative 2: Widen Roadway to the East $10,780 Alternative 3: Widen Roadway Equally on Both Sides $6,860 Alternative 4: County DPW—Preferred Alternative $9,800 OR 2. Contribute funds for riparian restoration activities in the Folsom Lake SRA, American River corridor, or other public lands. Placer County DPW shall contact appropriate individuals to determine whether there is a potential to create, restore, or enhance riparian habitat within these preserves. OR 3. Develop a riparian restoration plan that involves creating or enhancing riparian habitat in the project area. Potential creation and enhancement sites shall be evaluated by the County and Reclamation to determine whether this is a feasible option. If Placer County DPW determines that onsite or offsite restoration is possible, a restoration plan will be developed that describes where and when restoration will occur and who will be responsible for developing, implementing, and monitoring the restoration plan.	**After construction**: Compensate for permanent impacts by implementing one or more of the following options: 1. Purchase mitigation bank credits. 2. Contribute thuds for riparian restoration activities 3. Develop a riparian restoration plan.	Placer County DPW	Placer County DPW	X_____

Mitigation Measure	Timing	Implementing Party	Monitoring Party	Verification Date and Signature
Mitigation Measure P8.2c: Update the Tree Survey Report for the Selected Alternative To address the potential loss or disturbance of valley foothill riparian forest, Placer County shall provide the DRC with an updated tree survey report (by an International Society of Arboriculture- [ISA-] Certified Arborist) depicting the exact locations of the following: 1. trees that are 15.2 centimeters (6 inches) dbh (diameter at breast height) or larger and that grow within 15.2 nters (50 feet) of any grading, road improvements, underground utilities, or other activities; 2. multitrunk trees that are 25.4 centimeters (10 inches) dbh or more (aggregate) and that grow within 15.2 meters (50 feet) of any grading, road improvements, underground utilities, or other activities; 3. trees that are 45.7 centimeters (18 inches) dbh or larger and that are located along the roadway corridor; and 4. tees that would be disturbed by offsite improvements (e.g., road improvements, underground utilities). The tree survey report shall list the sizes (diameter at 1.2 meters [4 feet] above the ground), species of trees, spot elevations, and approximate driplines. The report also shall identify the trees to be saved, without disturbance, and those to be removed. The locations of trees to be saved and those to be removed shall be shown on the survey map and superimposed over the grading plan. This map also shall show all proposed improvements, including any underground utilities. The survey report shall be reviewed and approved by the DRC before any construction activity, including preliminary clearing or grading.	**Before construction**: Provide the DPW Design Review Committee (DRC) with an updated tree survey report. **During construction**: Implement the recommendations of the tree survey report	Certified arborist Construction team or contractor	Placer County DPW Placer County DPW	X_____ X_____

Mitigation Measure	Timing	Implementing Party	Monitoring Party	Verification Date and Signature
Mitigation Measure P8.2d: Avoid and Minimize Disturbance of Riparian Communities To address the potential loss or disturbance of valley foothill riparian forest, to the extent possible, Placer County DPW shall avoid impacts on riparian communities by implementing the following measures. 1. Redesign or modify the project to avoid direct and indirect impacts on riparian habitats, if feasible. 2. Protect riparian habitats that are located near the project area by installing temporary construction fencing to protect the riparian vegetation. Depending on site-specific conditions, this buffer may be narrower or wider than 6 meters (20 feet). The locations of the fencing shall be marked in the field with stakes and flagging and shown on the construction drawings. The construction specifications shall contain clear language that prohibits construction-related activities, vehicle operation, material and equipment storage, and other surface-disturbing activities within the fenced environmentally sensitive areas. 3. Minimize the potential for long-term loss of riparian vegetation by trimming vegetation rather than removing the entire shrub. Shrubs that need to be trimmed shall be cut at least 0.3 meter (1 foot) above ground level to leave the root systems intact and allow for more rapid regeneration. Cutting shall be limited to the minimum area necessary within the construction zone. Cutting shall be allowed only for shrubs (all trees shall be avoided) in areas that do not provide habitat for sensitive species. To protect nesting birds, Reclamation does not allow pruning or removal of woody riparian vegetation from March 15 to July 31. 4. Require the contractor to perform any necessary pruning, including pruning for utility line clearance, using the "Pruning Guidelines" adopted by the California Department of Forestry and Fire Protection. 5. Inspect the areas that undergo vegetative pruning and tree removal immediately before construction, immediately after construction, and 1 year after construction to determine the amount of existing vegetative cover, cover that has been removed, and cover that resprouts. If, after 1 year, these areas have not resprouted sufficiently to return the cover to the preproject level, the contractor will be responsible for replanting the areas with the same species to reestablish the cover to the preproject condition.	**Before construction:** inspect areas that will undergo pruning. **During construction**: 1. Redesign or modify the project to avoid impacts. 2. Install construction fencing around habitat. 3. Trim vegetation rather than remove entire shrub. 4. Use "Pruning Guidelines" adopted by California Department of Forest and Fire Protection. Immediately after construction: Inspect areas that underwent vegetative pruning and tree removal. **1 year after construction:** Inspect area that underwent vegetative pruning and tree removal; replant areas with same species if sufficient cover has not grown back.	Construction team or contractor Placer County DPW or identified contractor	Placer County DPW Placer County DPW	X_____ X_____

Mitigation Measure	Timing	Implementing Party	Monitoring Party	Verification Date and Signature
Mitigation Measure P8.3a: Obtain a Tree Permit To address the loss or disturbance of blue oak-digger pine woodland and native trees, Placer County DPW shall acquire a Tree Permit for the removal of trees 15 centimeters (6 inches) dbh or larger and multi-trunked trees with an aggregate diameter of 30 centimeters (10 inches) dbh or more.	**Before construction:** Require a Tree Permit before the removal of any trees 15 centimeters in diameter at breast height or larger.	Placer County DPW	Placer County DPW	X_____
Mitigation Measure P8.3b: Mitigate Tree Removal To address the loss or disturbance of blue oak-digger pine woodland and native trees, trees identified for removal and trees with disturbance within their driplines shall be replaced along the corridor as feasible. 1. Trees removed from Reclamation property shall be replaced on Reclamation property on an inch-by-inch basis. For example, if 254 centimeters (100 inches) of tree diameter are proposed to be removed, the replacement trees shall be equal to 254 centimeters (100 inches) in diameter (aggregate). if feasible, seedlings should be from acorns collected within 30 miles of the project location in Placer or Sacramento Counties in the American River watershed and between the elevations of 100 and 800 feet. A 3-year monitoring and maintenance plan for the trees and any irrigation shall be required. The expectation is that there will be 100% survival for the replacement trees at the end of 3 years. Tree replacement on Reclamation property shall take place in close proximity to the project corridor. 2. In lieu of 50% of the mitigation for tree removal that is not on Reclamation property, a contribution to the Placer County Tree Preservation Fund shall be required. The value is based on 50% of the overall replacement estimate, which shall be submitted to the Placer County Development Review Committee (DRC) for review and approval. 3. The trees shall be installed by the contractor and inspected and approved by Placer County DPW before completion of the project. At its discretion, the DRC may establish an alternate deadline for installation of replacement trees if weather or other circumstances prevent the completion of this requirement before completion of the project. 4. For native trees removed from private lands, Placer County DPW may either: o replace the trees on the private lands with one 15-gallon native tree for each tree removed or o contribute money into the Placer County Tree Preservation Fund Mitigation	**After construction**: Mitigate tree removal by: 1. Replacing trees removed during construction. 2. Contributing to the Placer County Tree Preservation Fund. 3. Inspecting tree replacement.	Construction team or contractor	Placer County DPW	X_____

Mitigation Measure	Timing	Implementing Party	Monitoring Party	Verification Date and Signature
Measure P8.3c: Revegetate All Disturbed Areas To address the loss or disturbance of blue oak-digger pine woodland and native trees, Placer DPW DPW County DPW or an approved contractor shall revegetate all disturbed areas. Revegetation undertaken between April 1 and October 1 shall include regular watering to ensure adequate growth, A winterization plan shall be provided with project Improvement Plans. It is Placer County DPW's responsibility to ensure proper installation and maintenance of erosion control/winterization during project construction. Placer County DPW shall provide for erosion control where roadside drainage is off of the pavement. Placer County DPW shall maintain a letter of credit, surety bond, or cash deposit in the amount of 100% of an approved engineer's estimate for winterization and permanent erosion control work before Improvement Plan approval to guarantee protection against erosion and improper grading practices.	**After construction**: Revegetate all disturbed areas	Placer County DPW	Placer County DPW	X_____
Mitigation Measure P8.3d: Install Temporary Construction Fencing to Protect Trees To address the loss or disturbance of blue oak-digger pine woodland and native trees, Placer DPW shall install a 1.2-meter-tall (4-foot-tall), brightly colored (usually yellow or orange), synthetic mesh—material fence (or an equivalent approved by the DRC) at the following location before allowing any construction equipment to be moved onto the site and before any construction activities take place. 1. At the limits of construction, outside the dripline of all trees that are 15.2 centimeters (6 inches) dbh (diameter at breast height), or 25.4 centimeters (10 inches) dbh aggregate for multitrunk trees, within 15.2 meters (50 feet) of any grading, road improvements, underground utilities, or other development activity, or as otherwise shown on the site plan. All trees that are to be saved shall be fenced. No construction activity, including grading, shall be allowed until this condition is satisfied. Any encroachment within these areas, such as within the driplines of trees to he saved, must first be approved by the DRC No grading, clearing, or storage of equipment or machinery, or similar activity, may occur until a representative of the DRC has inspected and approved all temporary construction fencing. The temporary fencing shall be maintained until all construction activities are complete. No grading, trenching, or movement of construction equipment shall be allowed within fenced areas. Protection for native trees on slopes shall include installation of a silt fence. A silt	**Before construction**; Install temporary construction fencing	Construction Team	Placer county DPW	X_____

Mitigation Measure	Timing	Implementing Party	Monitoring Party	Verification Date and Signature
fence shall be installed at the upslope base of the protective fence to prevent soil from drifting down over the root zone. Efforts shall be made to save trees where feasible. These efforts may include the use of retaining walls or other techniques commonly associated with tree preservation. The temporary construction fencing and a note reflecting this condition shall be shown on the Improvement Plans.				
Mitigation Measure P8.3e: Update the Tree Survey Report for the Selected Alternative To address the loss or disturbance of blue oak-digger pine woodland and native trees, Placer County DPW shall provide the DRC with an updated tree survey report (by an ISA-Certified Arborist) depicting the exact locations of the following: 1. trees that are 15.2 centimeters (6 inches) dbh (diameter at breast height) or larger and that grow within 15.2 meters (50 feet) of any grading, road improvements, underground utilities, or other activities; 2. multitrunk trees that are 25.4 centimeters (10 inches) dbh or more (aggregate) and that grow within 112 meters (50 feet) of any grading, road improvements, underground utilities, or other activities; 3. trees that are 45.7 centimeters (18 inches) dbh or larger and that are located along the roadway corridor; and 4. trees that would be disturbed by offsite improvements (e.g., road improvements, underground utilities). The tree survey report shall list the sizes (diameter at 1.2 meters [4 feet] above the ground), species of trees, spot elevations, and approximate driplines. The report also shall identify the trees to be saved, without disturbance, and those to be removed. The locations of trees to be saved and those to be removed shall be shown on the survey map and superimposed over the grading plan. This map also shall show all proposed improvements, including any underground utilities. The survey report shall be reviewed and approved by the DRC before any development activity on site, including preliminary clearing or grading.	**Before construction**: Complete a Placer County tree survey report identifying DPW trees to be saved, undisturbed, and removed. **During construction:** Follow guidelines of the survey report.	Placer County DPW Construction team or contractor	Placer County DPW Placer County DPW	X_____ X_____

Mitigation Measure	Timing	Implementing Party	Monitoring Party	Verification Date and Signature
Mitigation Measure P8.4a: Complete Section 7 ESA Consultation with USFWS for Potential Impacts on VELB To address the potential mortality of individual elderberry valley longhorn beetles or disturbance of habitat, Placer County DPW will obtain approval from USEWS before beginning any grading, clearing, or excavation. The project is subject to review and approval by USFWS.	**Before construction**: Complete Section 7 Endangered Species Act (ESA) consultation with the U.S. Fish and Wildlife Service (USFWS).	Placer County DPW	USFWS	X_____
Mitigation Measure P8.4b: Establish a Minimum 6-Meter-Wide (20-Foot-Wide) Buffer around All Elderberry Shrubs That Will Not Be Removed To address the potential mortality of individual elderberry valley longhorn beetles or disturbance of habitat, Placer County DPW shall ensure that a minimum 1.2-meter-tall (4-foot-tall) temporary, plastic mesh—type construction fence (Tensor Polygrid or equivalent) is installed at least 6 meters (20 feet) around the driplines of elderberry shrubs that are within 30.5 meters (100 feet) of the construction area but that will not be removed. This fencing is intended to prevent encroachment by construction vehicles and personnel. The exact location of the fencing shall be determined by a qualified biologist, with the goal of protecting sensitive biological resources (i.e., habitat for VELD). The fencing shall be strung tightly on posts set at a maximum interval of 3 meters (10 feet). The fencing shall be installed in a way that prevents equipment from enlarging the work area beyond the area necessary to complete the work. The fencing shall be checked and maintained weekly until all construction is completed. This buffer zone shall be marked by a sign stating, "This is habitat of the valley elderberry longhorn beetle, a threatened species, and must not be disturbed. This species is protected by the Endangered Species Act of 1973, as amended. Violators are subject to prosecution, fines, and imprisonment." No construction activity, including grading, shall be allowed until this condition is satisfied. No grading, clearing, storage of equipment or machinery, or other disturbance or activity may occur until a representative of Reclamation has inspected and approved all temporary construction fencing. The fencing and a note reflecting this condition shall be shown on the Improvement Plans.	**Before construction**: Establish a minimum 6-meter-wide (20-foot- wide) buffer around all elderberry shrubs.	Placer County DPW	Placer County DPW	X_____
Mitigation Measure P8.4e Implement Dust Control Measures To address the potential mortality of individual elderberry valley longhorn beetles or disturbance of habitat, Placer County DPW shall ensure that dust control measures are implemented for all ground-disturbing activities in the project area. These measures may include application of water to graded and disturbed areas that are unvegetated. To avoid attracting Argentine ants, at no time shall water be sprayed within the driplines of elderberry plants.	**During construction**: Implement dust control measures	Construction team	Placer County DPW	X_____

Mitigation Measure	Timing	Implementing Party	Monitoring Party	Verification Date and Signature
Mitigation Measure P8.4d: Transplant Elderberry Shrubs That Cannot Be Avoided To address the potential mortality of individual elderberry valley longhorn beetles or disturbance of habitat, Placer County OPW shall ensure that all elderberry shrubs with one or more sterns measuring 2.5 centimeters (1.0 inch) or more in diameter, and that cannot be avoided during construction, shall be transplanted to a conservation area in accordance with USFWS's Conservation Guidelines for Valley Elderberry Longhorn Beetle (U.S. Fish and Wildlife Service 1999). In the event that an elderberry shrub is unlikely to survive transplantation because of poor condition or location, the shrub may be exempted from transplantation at the discretion of USFWS. Implementation of Alternative 1 would require transplanting three elderberry shrubs, and implementation of Alternative 2, 3, or 4 would require transplanting five elderberry shrubs.	**Before or During construction:** Transplant elderberry shrubs that cannot be avoided.	Placer County DPW	Placer County DPW	X_____

Mitigation Measure	Timing	Implementing Party	Monitoring Party	Verification Date and Signature
Mitigation Measures P8.4e: Compensate for the Removal or Destruction of Valley Elderberry Longhorn Beetle Habitat To address the potential mortality of individual elderberry valley longhorn beetles or disturbance of habitat, Placer County DPW shall compensate for the removal or destruction of all elderberry stems that measure 2.5 centimeters (1 inch) or more at ground level (VELB habitat) and that are located within 6 meters (20 feet) of construction activities. Compensation shall include planting replacement elderberry seedlings or cuttings and associated native plantings within a USFWS approved conservation area at a ratio between 1:1 and 8:1 (new plantings to affected stems), depending on the diameter of the stern at ground level (see Table 8-6), the presence or absence of exit holes, and whether the shrub is located in riparian habitat as indicated in the USFWS guidelines for VELB. Placer County DPW shall compensate for all shrubs that are directly affected (i.e., removed/transplanted or destroyed) by the project. Placer County DPW shall compensate for direct effects on VELB habitat as described below. All calculations for compensation of VELE habitat are provided in the BA (Appendix 3). Purchase credits at the Wildland's Sheridan Ranch Conservation Bank in Placer County, a USFWS-approved mitigation bank. The cost to establish a conservation area for VELB at this bank is estimated to be $1,500 per unit; each unit includes five elderberry seedlings and five associated riparian plantings. Only whole units can be purchased using compensation ratios identified in the USFWS guidelines for VIlE and based on stem counts listed in Table 8-6. Alternative 1 would require the purchase of two mitigation credits (nine elderberry seedlings and seven native plantings), for an approximate cost of $3,000, and Alternatives 2, 3, and 4 would require the purchase of three mitigation credits (14 elderberry seedlings and 11 native plantings) for an approximate cost of $4,500. The exact cost to purchase mitigation credits for project- related impacts would be determined during formal consultation with USFWS.	**After construction:** Compensate for the removal of beetle habitat; compensation includes replacing removed shrubs with elderberry seedlings or cuttings, planted with associated native plants	Placer County DPW	Placer County DPW	X_____
Mitigation Measure PS.4f: Conduct Mandatory Contractor/Worker Awareness Training for Construction Personnel To address the potential mortality of individual elderberry valley longhorn beetles or disturbance of habitat, a USFWS-approved biologist shall conduct mandatory contractor/worker awareness training for construction personnel. If new construction personnel are added to the project, the contractor shall ensure that the personnel receive the mandatory training before starting work. This measure is also specified in the BA for the proposed project.	**Before construction:** Conduct mandatory contractor/worker awareness training for construction personnel.	Approved biologist	USFWS	X_____

Mitigation Measure	Timing	Implementing Party	Monitoring Party	Verification Date and Signature
Mitigation Measure P8.5: Conduct a Preconstruction Survey for Northwestern Pond Turtle at the Baldwin Reservoir Canal To address the potential mortality of northwestern pond turtles, Placer County DPW shall retain a qualified wildlife biologist to conduct a preconstruction northwestern pond turtle survey at the Baldwin Reservoir canal. The preconstruction survey shall be conducted at most 24 hours before the start of construction activities at the canal, If a northwestem pond turtle is located in the construction area, the biologist shall relocate the turtle downstream of the project area, toward Baldwin Reservoir, and an exclusion fence shall be installed to prevent the movement of turtles back into the construction area.	**Before construction**: Conduct a northwestern pond turtle survey at most 24 hours before the start of construction.	Wildlife biologist	Placer County DPW	X_____
Mitigation Measure P8.6a: Conduct a Focused Preconstruction Survey for Raptor Nests and Nesting Birds To address the potential disturbance of nesting loggerhead shrike, oak titmouse, white-tailed kite, and non-special-status nesting migratory birds and raptors, before grading and during the raptor nesting season (March through July), a qualified raptor biologist shall conduct a focused survey for raptor nests in areas potentially affected by project implementation. If construction is proposed to take place during the raptor breeding season, no construction activity shall take place within 152.4 meters (500 feet) of an active nest until the young have fledged (as determined by a qualified raptor biologist). ‘íA note to this effect shall be placed on the Improvement Plans. A copy of the survey shall be provided to the Placer County DPW, Reclamation, and DFG. If an active raptor nest is identified on site, appropriate mitigation measures shall be developed and implemented in consultation with DFG.	**Before construction**: Conduct a focused survey for raptor nests. **During construction**: Limit construction to 152.4 meters (500 feet) from occupied nests.	Qualified biologist Construction team	Placer County DPW Placer County DPW	X_____ X_____
Mitigation Measure P8.6b: Avoid Disturbance of Nesting Special-Status and Non-Special- Status Migratory Birds and Raptors To avoid impacts on nesting loggerhead shrike, oak titmouse, white-tailed kite, or other non special-status migratory birds and raptors, Placer County DPW shall implement the following avoidance and minimization measures. 1. To the extent possible, shrub, and tree removal activities associated with the project shall be conducted outside the breeding season (which generally occurs between March 1 and August 15) for migratory birds and raptors. 2. If shrub and tree removal activities are to take place during the breeding season for these species, a qualified wildlife biologist shall be hired to conduct focused nest surveys for active loggerhead shrike, oak titmouse, white-tailed kite, and non-special-status migratory bird and raptor nests. 3. If active loggerhead shrike, white-tailed kite, or other non-special-status raptor	**During construction**: Implement the following measures: 1. Conduct shrub and tree removal activities outside breeding season. 2. Conduct focused nest surveys if construction will take place during breeding season. 3. Implement “no-disturbance” buffers around occupied nest sites.	Placer County DPW	Placer County DPW	X_____

Mitigation Measure	Timing	Implementing Party	Monitoring Party	Verification Date and Signature
nests are found in the project area, and if construction activities must occur during the nesting period, Placer County DPW shall consult DFG to determine and implement appropriate “no- disturbance” buffers around the nest sites until the young have fledged (as determined by a qualified biologist), 4. if active oak titmouse or other non-special-status migratory bird nests are found in the project area, and if construction activities must occur during the nesting period, Placer County DPW shall consult USFWS to develop and implement a memorandum of understanding (MOU) to promote the conservation of migratory bird populations.	4. Consult USFWS to develop and implement a memorandum of understanding (MOU) to promote conservation.			
Mitigation Measure P8.7: Avoid Disturbance of Nesting Swallows To avoid impacts on nesting swallows, Placer County DPW shall implement the following avoidance and minimization measures. 1. To the extent possible, construction activities that could disturb nesting swallows shall be conducted outside the breeding season (which generally occurs between March 1 and September 1) for these species. 2. If construction activities are to take place during the swallows’ breeding season, Placer County DPW shall hire a qualified biologist to inspect the concrete box culvert at the Baldwin Reservoir canal during the swallows’ nonbreeding season. If nests are found and are abandoned, they may be removed. To avoid damaging active nests, nests must be removed before the breeding season begins (March 1). A permit from DFG and USFWS is required if active nests must be removed. 3. After nests are removed, the underside of the concrete box culvert at the Baldwin Reservoir canal shall be covered with 13- to 1.9-centimeter (0.5- to 0.75-inch) mesh net or poultry wire. All net installation shall occur before March 1. The netting shall be anchored so swallows cannot attach their nests to the bridge though gaps in the net. 4. If netting of the concrete box culvert at the Baldwin Reservoir canal does not occur by March 1 and swallows colonize the bridge, modifications to this structure shall not begin before September 1 of that year or until the young have fledged and all nest use has been completed. 5. If appropriate steps are taken to prevent swallows from constructing new nests, work can proceed at any time of the year.	**During construction:** Implement the following measures: 1. To the extent possible, conduct construction activities outside breeding season. 2. If construction takes place during breeding season, a biologist shall inspect concrete box culvert at Baldwin Reservoir. 3. Remove inactive nests 4. Cover box culvert with mesh wire to prevent reentry of swallows.	Qualified Biologist	Placer County DPW	X_____

Mitigation Measure	Timing	Implementing Party	Monitoring Party	Verification Date and Signature
Mitigation Measure P9.la: Prepare and Implement Improvement Plans, Specifications, and Cost Estimates To address potential construction-related soil erosion and sedimentation, Placer County DPW shall prepare Improvement Plans, specifications, and cost estimates (per the requirements of Section II of the LDM. The plans shall show all conditions for the project as well as pertinent topographical features both on site and off site. All existing and proposed utilities and easements, on site and adjacent to the project, that may be affected by planned construction, shall be shown on the plans. All landscaping and irrigation facilities in the public right-of-way (or public easements), or landscaping within sight-distance areas at intersections, shall be included in the Improvement Plans. If the Design/Site Review process and/or DRC review is required as a condition of project approval, said review process shall be completed before submittal of Improvement Plans. Record drawings shall be prepared and signed by a California Registered Civil Engineer at Placer County DPW's expense before acceptance by the County of site improvements. All proposed grading, drainage improvements, and vegetation and tree removal shall be shown on the Improvement Plans, and all work shall conform to provisions of the County Grading Ordinance (Chapter 29, Placer County Code) that are in effect at the time of submittal. No grading, clearing, or tree disturbance shall occur until the improvement Plans are approved and all temporary construction fencing has been installed and inspected by a member of the DRC. All cut/fill slopes shall be at 2:1 (horizontal: vertical) unless a soils report supports a steeper slope and Placer County DPW concurs with said recommendation.	**Before construction**; Prepare Placer County Placer County Improvement Plans, DPW DPW specifications, and cost estimates.	Placer County DPW	Placer County DPW	X_____

Mitigation Measure	Timing	Implementing Party	Monitoring Party	Verification Date and Signature
Mitigation Measure P9.lb: Prepare and Implement an Erosion and Sediment at Control Plan To address potential construction-related soil erosion and sedimentation, Placer County DPW or a certified contractor working on behalf of Placer County shall prepare an erosion and sediment control plan before construction activities begin. The plan shall be prepared and approved before construction activities begin. The following measures shall be addressed in the plan. 1. All graded areas shall be covered with protective materials, such as mulch, or reseeded with adaptive plant species. The plan shall include details regarding seed material, fertilizer, and mulching. 2. Protocols for the handling of construction and maintenance materials, such as sanitary wastes and petroleum products, shall be developed to minimize the chance of spill and to provide prompt corrective action should spill occur 3. All graded areas and soil piles shall be mounded to minimize erosion potential 4. Drainage outfalls shall be designed and positioned to avoid erosion. Energy dissipaters shall be installed where necessary.. 5. Erosion control measures shall include best management practices (BMPs) to minimize water quality impacts; BMPs include filter berm, sandbag, or straw-bale barriers; siltation retention fences; vegetated buffer strips; vegetated swales; and spill containment provisions 6. Temporary sediment catchment basins shall be constructed where necessary to prevent sediment from being transported to permanent detention basins and drainages. The locations and size of the temporary basins shall be shown in the erosion and sediment control plan. 7. Grading shall not be permitted after October 15 or before May I. Grading may be permitted outside of these dates if the Director of DPW determines that such work can be completed before the onset of weather conditions that would prevent the work from being adequately winterized or completed. 8. Revegetation shall begin when the graded area has attained finished grade, but not later than October 1 (to ensure germination by October 30).	**Before construction:** Prepare an erosion and sediment control plan, including provisions and protocols for: 1. Covering all graded areas with protective materials. 2. Handling construction and maintenance materials. 3. Mounding graded areas and soil piles. 4. Designing and positioning drainage outfalls to minimize erosion. 5. Implementing soil erosion BMPs. 6. Constructing temporary catchment basins when necessary. 7. Prohibiting grading after October 15 or before May 1. 8. Revegetating graded areas once grading is complete but no later than October 1 **During and after construction:** Implement erosion and sediment control plan.	Placer County DPW Placer County DPW	Placer County DPW Placer County DPW	X_____ X_____

Mitigation Measure	Timing	Implementing Party	Monitoring Party	Verification Date and Signature
Mitigation Measure P9.lc: Revegetate All Disturbed Areas To address potential construction-related soil erosion and sedimentation, Placer County DPW or an approved contractor shall revegetate all disturbed areas. Revegetation undertaken between April 1 and October 1 shall include regular watering to ensure adequate growth. A winterization plan shall be provided with project Improvement Plans. It is Placer County DPW's responsibility to ensure proper installation and maintenance of erosion control/winterization during project construction. Placer County DPW shall provide for erosion control where roadside drainage is off of the pavement. Placer County DPW shall maintain a letter of credit, surety bond, or cash deposit in the amount of 100% of an approved engineer's estimate for winterization and permanent erosion control work before Improvement Plan approval to guarantee protection against erosion and improper grading practices.	**After construction**: Revegetate areas disturbed during construction.	Placer County DPW	Placer County DPW	X_____
Mitigation Measure P9.ld: Review Proposed Grading Plans To address potential construction-related soil erosion and sedimentation, if at any time during construction, a field review by County personnel indicates a significant deviation from the proposed grading shown on the Improvement Plans, specifically with regard to slope heights, slope ratios, erosion control, winterization, tree disturbance, and/or pad elevations and configurations, the plans shall be reviewed by the DRC and DPW for a determination of substantial conformance to the project approval conditions before any further work proceeds Failure of the DRC and DPW to make a determination of substantial conformance may serve as. grounds for the revocation/modification of the project approval by the appropriate hearing body.	**During construction**: Review proposed grading plans.	Placer County DPW or DRC	Placer County DPW or DRC	X_____
Mitigation Measure P9.le: Remove Unsuitable Fill Material or Debris To address potential construction-related soil erosion and sedimentation, any unsuitable fill or debris identified in the Geotechnical Engineering Report(s) (to be prepared and submitted with the Improvement Plans) or discovered during construction shall be hauled off site to an appropriately permitted facility. The applicant may propose to treat unsuitable soils to make them suitable.	**During construction**: Remove unsuitable fill material or debris.	Placer County DPW	Placer County DPW	X_____

Mitigation Measure	Timing	Implementing Party	Monitoring Party	Verification Date and Signature
Mitigation Measure P10.1: Stop Work if Cultural Deposits Are Discovered during Ground- Disturbing Activities To address potential damage to previously unidentified buried archaeological resources, if any archaeological artifacts, such as stone tools, or unusual amounts of shell or bone are uncovered during any construction activities, all work must stop immediately in the area (within 30.5 meters [100 feet] of the find) and a qualified archaeologist retained to evaluate the deposit. The Placer County Planning Department and Placer County Department of Museums must also be contacted for review of the archaeological find(s). Placer County DPW shall implement the recommended treatment the measures, which typically include avoiding the site, capping the site with fill material, or imi1menting data recovery programs, such as excavation or detailed documentation. If cultural resources are discovered during construction activities, the construction contractor, Placer County DPW, Placer County Department of Museums, and Reclamation (if on Reclamation property) shall verify that work has been halted until appropriate treatment measures are implemented. Concurrence shall be obtained from the applicable federal and/or county agency on any measures to be implemented before construction activities resume in the area of the find.	**During construction**: Stop work if cultural deposits are discovered, Evaluate the cultural deposit and recommend treatment measures. Implement recommended treatment measures.	Construction team Qualified archeologist Construction team	Placer County DPW	X_____

Mitigation Measure	Timing	Implementing Party	Monitoring Party	Verification Date and Signature
Mitigation Measure P10.2; Comply with State/Federal Laws Pertaining to the Discovery of Human Remains To address potential damage to previously identified human remains, if human remains are discovered on private property during construction, the Placer County Coroner and NAHC must also be contacted. Work in the area may only proceed after authorization is granted by the Placer County Planning Department. A note to this effect shall be provided on the Improvement Plans for the project. If human remains are discovered on Reclamation property during construction, the Reclamation archaeologist, the Placer County Coroner, and NAHC shall be contacted. Work in the area may proceed only after authorization is granted by Reclamation. All activity at such a site on Reclamation property must comply with the federal Native American Grave Protection and Repatriation Act (NAGPRA) (43 CFR Part 10). If discovered human remains are of Native American origin, Placer County DPW and its contractors shall comply with state and federal laws relating to the disposition of Native American burials, which falls within the jurisdiction of NAHC (Public Resources Code, Section 5097). If human remains are discovered or recognized in any location other than a dedicated cemetery, there shall be no further excavation or disturbance of the site or any nearby area reasonably suspected to overlie adjacent human remains until ▪ the coroner of Placer County has been informed and has determined that no investigation of the cause of death is required and, ▪ if the remains are of Native American origin, o the descendants of the deceased Native Americans have made a recommendation to the landowner or the person responsible for the excavation work for means of treating or disposing of, with appropriate dignity, the human remains and any associated grave goods, as provided in Public Resources Code, Section 5097.98, or o NAHC is unable to identify a descendant or the descendant fails to make a recommendation within 24 hours after being notified by NAHC. According to California Health and Safety Code, six or more human burials at one location constitute a cemetery (Section 8100), and disturbance of Native American cemeteries is a felony (Section 7052. Section 7050.5 requires that excavation be stopped in the vicinity of discovered human remains until the coroner can determine whether the remains are those of a Native American. If the remains are determined to be Native American, the coroner must contact NAHC.	**During construction:** Comply with state/federal laws pertaining to the discovery of human remains.	Placer County DPW	Placer County DPW	X_____

Mitigation Measure	Timing	Implementing Party	Monitoring Party	Verification Date and Signature
Mitigation Measure P11.la: Provide Class II Bikeways To reconcile inconsistency with Local plans related to the development of bikeways and trails, Placer County DPW shall provide Class II bikeways along Auburn-Folsom Road pursuant to the Placer County Bikeways Master Plan. The location, width, alignment, and surfacing of the bikeways shall be in accordance with the bikeway design standards listed in the Placer County General Plan.	**During construction**: Provide Class II bikeways along Auburn- Folsom Road.	Placer County DPW	Placer County DPW	X_____
Mitigation Measure P11.lb: Improve Equestrian Trail in Accordance with Standard County Design Conditions To reconcile inconsistency with local plans related to the development of bikeways and tails, Placer County DPW shall install a multiple-use (equestrian/pedestrian) trail as part of the project improvement, as described below. 1. Placer County DPW shall construct/improve a 4.6-meter-wide (15-foot-wide) (or as otherwise approved by the Parks Division) meandering public trail easement along the western side of Auburn-Folsom Road, from the County line to Oak Hill Drive and within the landscape buffer. 2. The trail shall be constructed of decomposed granite, unless otherwise approved by the Parks Division. A trail tread and drainage appurtenances shall be installed and clearing, seeding, and planting shall be implemented as necessary for erosion control. 3. The trail tread shall be located as far from the edge of pavement of the adjoining street right- of-way as possible.	**During construction**: Install a multiple-use trail as part of project improvement.	Placer County DPW	Placer County DPW	X_____
Mitigation Measure P11.2: Install a Traffic Signal at the Auburn-Folsom Road/Lou Place Intersection Placer County DPW shall install a traffic signal at the Auburn-Folsom Road/Lou Place intersection or shall provide equal or better means of tail connectivity at other locations. In the event that the Circulation Element of the Granite Bay Community Plan is revised and the equestrian trail at Lou Place is eliminated, this mitigation measure would no longer be necessary.	**During construction**: Install a traffic signal at the Auburn-Folsom Road/Lou Place intersection.	Placer County DPW	Placer County DPW	X_____

Auburn Folsom Road Widening Project

Placer County, California

Revegetation and Restoration Plan

Prepared For:
Placer County Department of Public Works
Auburn, California

Prepared by:
Dokken Engineering

March 2007

Table of Contents

Summary **1**
Project Description **2**
Project Location and Summary 2
On-Site Revegetation 2
Responsible Party 3
Environmental Mitigation Monitoring and Reporting Requirements **3**
Restoration Contractor **4**
Qualifications of Restoration Contractor 4
Scope of Work 4
Habitat to be Restored **4**
Site Preparation 4
Upland Areas 4
Plant Material 5
Temporary Irrigation System 5
Installation Methods/Planting Methods 5
Trees 5
Maintenance **6**
Revegetation Areas 6
Pest Control 6
Irrigation 6
Remedial Measures 6
Acceptance of Work **7**
Supplemental Watering 7
Herbivore Control 7
Maintenance 7
Performance 7

Attachments

Revegetation Plan Sheets, RV-1 thru RV-7

Summary

This is the revegetation plan for construction impacts to trees associated with the Auburn Folsom Road Widening South Phase Project, Placer County, California. Figure 1 shows the regional and project location. This revegetation plan addresses Mitigation Monitoring and Reporting Program (State Clearinghouse Number 2002042036) items:

- Mitigation Measure P7.4b: Mitigate Tree Removal
- Mitigation Measure P8.3b: Mitigate Tree Removal

Figure 1: Project Location

This plan describes the scope of work, the specifications, the schedule and the performance standards for the revegetation for tree loss from the impacts associates with the proposed project.

Project Description

Project Location and Summary

The Auburn Folsom Road (AF Road) Widening Project South Phase is located on AF Road from the Placer/Sacramento County line north to Lou Place. The Placer County Department of Public Works (DPW) recommended project is a combination of alignment alternatives studied in the Environmental Impact Report (EIR)/ FONSI. The proposed alignment was selected as the preferred alternative due to its compliance with specific project goals, such as improvement of safety, capacity and design speed, while minimizing environmental and social impacts by selecting the best right of way and roadway profile combinations for specific portions of the project.

Construction of the South Phase will begin in 2007.

The proposed widening includes widening AF Road to provide four 12-foot lanes (two in each direction) and 6-foot paved shoulders to accommodate Class II bike lanes on each side. Generally, a 16-foot painted and/or raised median will also be incorporated, with a section (approximately 600 linear feet) of raised landscaped median at the south end of the project. A granite monument with an inscription welcoming people to Granite Bay will be placed in the southerly end of the landscaped median.

The proposed project will also incorporate a meandering multi-purpose trail from Oak Hill Drive south to the County line. The meandering trail will cross the canal and connect to the Baldwin Reservoir trail using the existing box culvert.

The existing signalized intersection (AF Road/Oak Hill Drive) will be modified. An 8-ft high concrete block wall is proposed for continuity on the west side of the project from Oak Hill Drive south to connect to the existing wall that was constructed by the City of Folsom.

Access to streets and driveways, specifically left turn movements, will be maintained either through two way left turn lanes, left turn pockets, or U-turn capabilities located in close proximity.

On-Site Revegetation

This plan describes the revegetation of areas impacted by the proposed project by planting native trees in upland habitat areas. Also included in this plan is a schedule for installation, monitoring guidelines and specifications for tree installation and maintenance.

Responsible Party

The Placer County Department of Public Works is responsible for implementation of this plan. The contact person for the County is

Ms. Sherri Berexa, Project Manager
Placer County Department of Public Works
3091 County Center Drive, Suite 220
Auburn, CA 95603

Environmental Mitigation Monitoring and Reporting Requirements

The Mitigation Monitoring and Reporting Program Mitigation Measure P7.4b and P8.3b: outlines the method to mitigate for the trees removed.

1. Trees removed from Reclamation property shall be replaced on Reclamation property on an inch-by-inch basis. For example, if 254 centimeters (100 inches) of tree diameter are proposed to be removed, the replacement trees shall be equal to 254 centimeters (100 inches) in diameter (aggregate). If feasible, seedlings should be from acorns collected within 30 miles of the project location in Placer or Sacramento Counties in the American River watershed and between the elevations of 100 and 800 feet. A 3-year monitoring and maintenance plan for the trees and any irrigation shall be required. The expectation is that there will be 100% survival for the replacement trees at the end of 3 years. Tree replacement on Reclamation property shall take place in close proximity to the project corridor.
2. In lieu of 50% of the mitigation for tree removal that is not on Reclamation property, a contribution to the Placer County Tree Preservation Fund shall be required. The value is based on 50% of the overall replacement estimate, which shall be submitted to the Placer County Development Review Committee (DRC) for review and approval.
3. The trees shall be installed by the contractor and inspected and approved by Placer County DPW before completion of the project. At its discretion, the DRC may establish an alternate deadline for installation of replacement trees if weather or other circumstances prevent the completion of this requirement before completion of the project.
4. For native trees removed from private lands, Placer County DPW may either:
    a. replace the trees on the private lands with one 15-gallon native tree for each tree removed or
    b. contribute money into the Placer County Tree Preservation Fund Mitigation

The trees shall be planted in the fall of each year.

Restoration Contractor

Qualifications of Restoration Contractor

The restoration contractor performing the site preparation, installation and maintenance shall have successfully completed (to the satisfaction of the County) a minimum of three restoration projects (installation and long term maintenance) involving the establishment of native plant communities in areas of size comparable to (or larger then) this project. The restoration contractor shall provide at least one English speaking person who is thoroughly familiar with all aspects of the project, including equipment and materials being utilized or installed and the best methods for their installation and application. Such person shall be present at all times during execution of this work and shall direct and supervise all work performed as specified herein.

Scope of Work

The restoration contractor shall furnish all labor and materials (including water) to execute this work, as indicated below and as necessary to complete the contract, including but not limited to the following:

- Site preparation and installation (and eventual removal) of temporary irrigation system.
- Installation of 624 new wire pin flags to mark the planting locations. The locations are subject to adjustment at the discretion of the project engineer. This task shall include the removal of the pin flags when directed by the engineer.
- Installation of 624 15 gallon native species oak trees obtained from nurseries that have grown the trees from locally collected seed stock as per Mitigation Measure (MM) P7.4b and MM P8.3a.
- Furnishing and installing the materials for a temporary irrigation system.
- Maintain the revegetated area for three years, per MM P7.4b and MM P8.3a.

Habitat to be Restored

The habitat to be restored by implementation of this plan will replace the native trees removed due to construction of the Auburn Folsom Road Widening Project South Phase. The revegetation will be in the form of trees in the woodland areas by the restoration contractor.

Site Preparation

Upland Areas

The project engineer and restoration contractor shall coordinate to ensure that the areas marked for tree planting areas are outside of the cut/fill slopes of the roadway, not impacting jurisdictional waters/wetlands, and conform to the Environmental Document for the project.

Plant Material

Table 1, below, lists the trees to be installed in the upland habitat restoration areas.

Location	Number of 15 gallon trees to be planted
County Right of Way (West of Auburn Folsom Road)	**160**
Bureua of Reclamation property (East of Auburn Folsom Road)	**464**
Total	**624**

Table 1: Trees to be planted

The tree planting areas are shown on the attached sheets RV-1 thru RV-7.

Temporary Irrigation System

The restoration contractor is responsible for survival and establishment of the installed plant material. It is the responsibility of the restoration contractor to install a temporary irrigation system to the revegetation areas. Any proposed design shall conform to the Special provisions of the Project and is subject to review and approval by the project engineer. It is the responsibility of the restoration contractor to remove the system when there is agreement between the County and the restoration contractor that supplemental watering is no longer necessary to ensure plant survival.

Installation Methods/Planting Methods

All trees shall be installed in the locations shown on the revegetation plans.

Trees

The plantings shall be spaced in a natural looking pattern with considerations for surround conditions.

- All planting holes shall conform to the details established in the project plans.
- Initial watering and back fill requirements shall conform to those outlined in the project plans and project specifications.

Maintenance

Revegetation Areas

The restoration contractor is responsible for the overall performance of the revegetation areas and is required to maintain the areas in accordance with the project specifications until the performance standards have been achieved. Normal maintenance will include herbivore control, repairs to the temporary irrigation system and replanting as necessary. The restoration contractor shall furnish and install any supplemental materials.

Maintenance shall commence immediately upon the accepted installation of the plant material. During this time, the revegetation areas shall be diligently maintained to ensure successful establishment. In addition, the restoration contractor is responsible for 100 percent survival of the trees for three years following the accepted installation. At the end of the three year establishment period, a thorough inspection shall be conducted by the County and the restoration contractor during which an inventory of all surviving trees will be prepared. The restoration contractor shall replace all dead or missing trees during the approved planting season, as directed by the project engineer.

Pest Control

The restoration contractor is responsible for protecting the trees from damage due to herbivory or trampling by wildlife. Protective measures such as fencing and cages shall be employed if necessary, subject to approval of the project engineer. The project engineer shall recommend control measures if necessary to protect the planting from damage. Any control devices shall be removed at the direction of the project engineer at such time that the trees can survive browsing and wildlife movement.

Irrigation

The restoration contractor is responsible for ensuring that the performance standards for survival are achieved. The goal of the revegetation efforts prescribed in this plan is to create a self-sufficient natural plant community; however, establishment of healthy native trees often requires supplemental irrigation. The source and costs of water shall be the responsibility of the restoration contractor. All water used for irrigation shall be pure of impurities, excess chlorine, nitrogen and salts.

Remedial Measures

Remedial measures may be necessary to repair any unsuccessful restoration efforts identified by the project engineer. These measures could include, but are not limited to, replacement of trees and modifications of maintenance methodology. The restoration contractor is responsible for implementing remedial measures required to meet the project specifications.

Acceptance of Work

All task performed by the restoration contractor shall be subject to approval by the County. The County will determine if the work for each task has been conducted in compliance with the project specifications.

Supplemental Watering

Supplemental watering by the temporary irrigation systems is the responsibility of the restoration contractor. All costs associated with the supplemental watering necessary for the establishment of the trees should be included in the restoration contractor's costs for installation and maintenance.

Herbivore Control

Control of damage to trees from herbivory are the responsibility of the restoration contractor. Costs associated with these measures shall be included in the restoration contractor's costs for installation and maintenance.

Maintenance

During the course of regularly scheduled monitoring visits, the project engineer shall inspect the condition of the site to determine whether the maintenance is being conducted in compliance with the project specifications. The results of these inspections will be in the form of a field memo.

Performance

If the restoration site does not meet the performance standards after five years due to the negligence of maintenance by the restoration contractor, any further work required for the project to meet the project standards will be at the restoration contractor's expense. If the restoration sites do not meet project specifications because of circumstances beyond control of the restoration contractor, a new contract will be negotiated for work necessary to meet the project specifications.

REVISION #	DATE:	DESCRIPTION AND SHEET NO.:	APPROVED BY:	DATE:

REGISTERED PROFESSIONAL ENGINEER
BRIAN R. STEPHENSON
No. 65313
Exp. 9/30/07
CIVIL
STATE OF CALIFORNIA

THE COUNTY OF PLACER OR ITS OFFICERS OR AGENTS SHALL NOT BE RESPONSIBLE FOR THE ACCURACY OR COMPLETENESS OF ELECTRONIC COPIES OF THIS PLAN SHEET.

PLAN SCALE: 1"=40'
PROFILE SCALE:
HORIZ: N/A
VERT: N/A

LEGEND

- R/W
- EROSION CONTROL APPROVED NATIVE SEED MIX
- MEDIAN LANDSCAPING (SEE HP SHEETS)
- 15 GALLON TREE (NATIVE SPECIES)

NOTE

1. TREE SPACING IS 10' ON CENTER

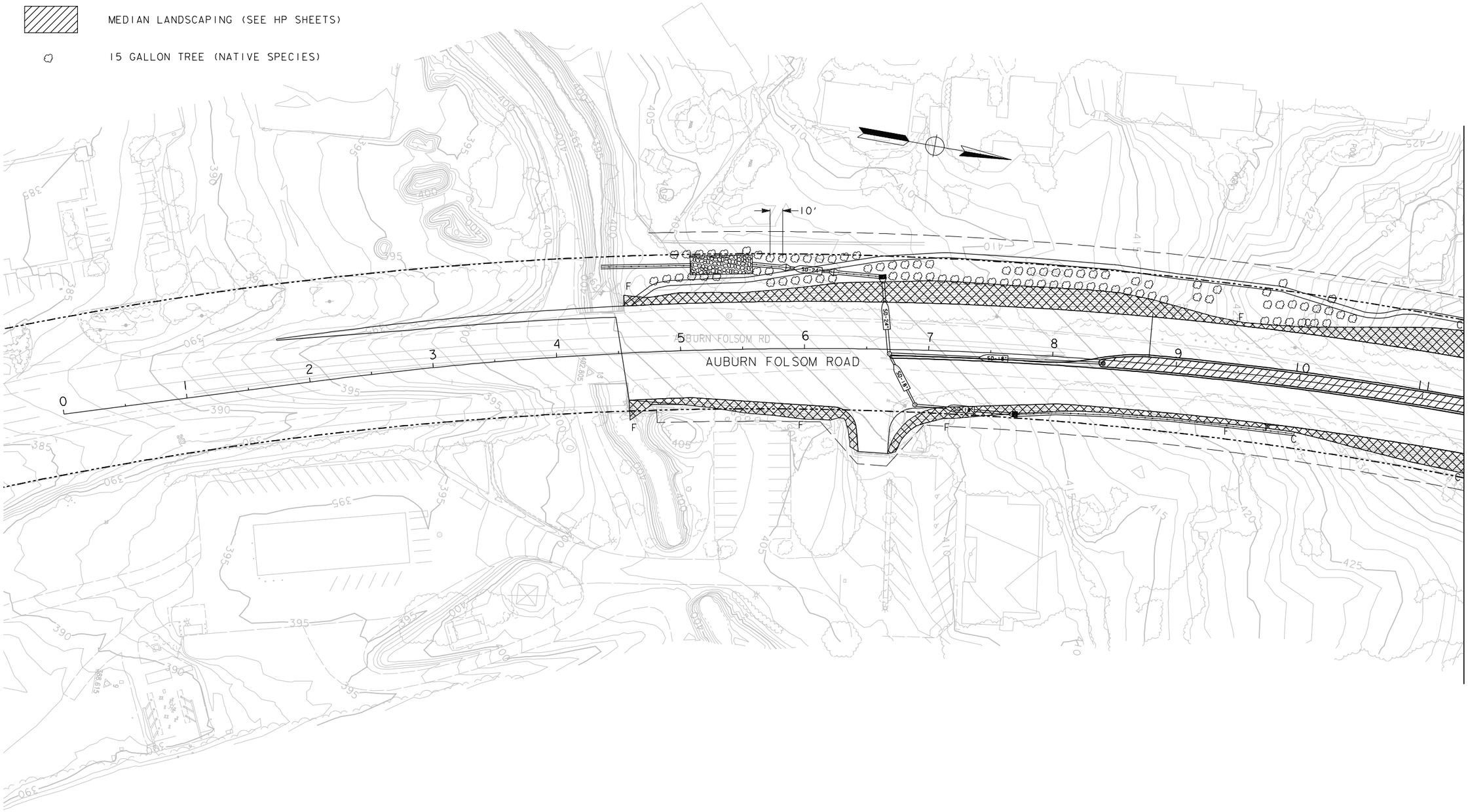

PLAN

THIS SHEET ACCURATE FOR RE-VEGETATION AND RESTORATION WORK ONLY

FOR REDUCED PLANS ORIGINAL SCALE IS IN INCHES 0 1 2 3

ALL DIMENSIONS SHOWN IN FEET UNLESS OTHERWISE NOTED

RECORD DRAWINGS

INITIALS DATE

RV-1

DESIGNED: B. STEPHENSON 01/23/07
DRAWN: B. STEPHENSON 01/23/07
CHECKED: J. OSTDIEK 01/23/07
RECORD DRAWINGS:

CONTRACT NO. 1001

DOKKEN ENGINEERING
2365 IRON POINT ROAD, SUITE 200
FOLSOM, CA 95630
PH: 916-858-0642 FAX: 916-858-0643

COUNTY OF PLACER DEPARTMENT OF PUBLIC WORKS
AUBURN FOLSOM ROAD WIDENING PROJECT - SOUTH PHASE

REVEGETATION PLAN

SHEET NO. 79 OF 95

01/23/07

REVISION #	DATE:	DESCRIPTION AND SHEET NO.:	APPROVED BY:	DATE:

REGISTERED PROFESSIONAL ENGINEER
BRIAN R. STEPHENSON
No. 65313
Exp. 9/30/07
CIVIL
STATE OF CALIFORNIA

THE COUNTY OF PLACER OR ITS OFFICERS OR AGENTS SHALL NOT BE RESPONSIBLE FOR THE ACCURACY OR COMPLETENESS OF ELECTRONIC COPIES OF THIS PLAN SHEET.

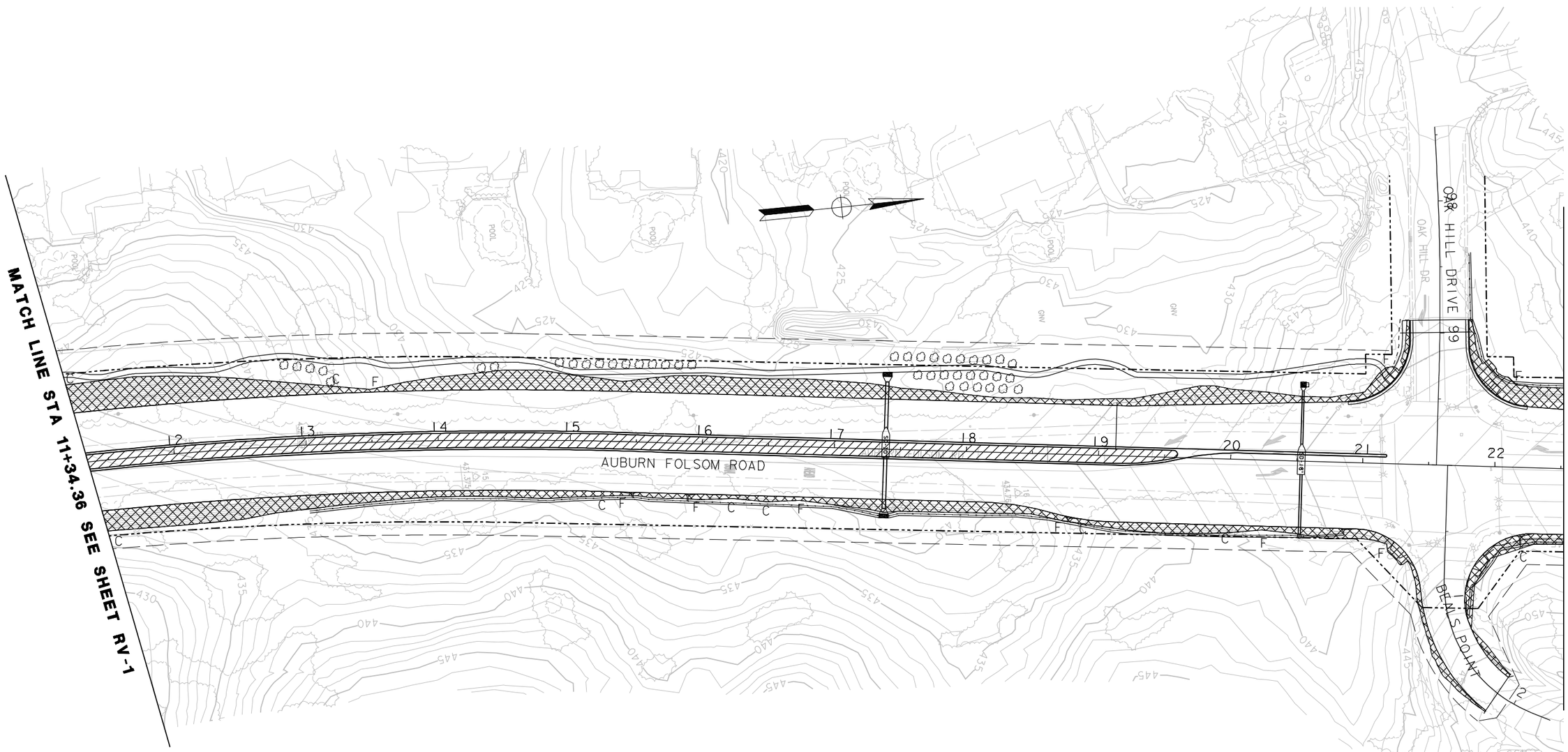

PLAN

THIS SHEET ACCURATE FOR RE-VEGETATION AND RESTORATION WORK ONLY

FOR REDUCED PLANS ORIGINAL SCALE IS IN INCHES 0 1 2 3

ALL DIMENSIONS SHOWN IN FEET UNLESS OTHERWISE NOTED

RECORD DRAWINGS

INITIALS DATE

RV-2

01/23/07

PLAN SCALE: 1" = 40'
PROFILE SCALE:
HORIZ: N/A
VERT: N/A

CONTRACT NO. 1001

DESIGNED: B. STEPHENSON 01/23/07
DRAWN: B. STEPHENSON 01/23/07
CHECKED: J. OSTDIEK 01/23/07
RECORD DRAWINGS:

DOKKEN ENGINEERING
2363 MT. VERNON ROAD, SUITE 200
PLACERVILLE, CA 95667
PH: 916-858-0642 FAX: 916-858-0643

COUNTY OF PLACER DEPARTMENT OF PUBLIC WORKS
AUBURN FOLSOM ROAD WIDENING PROJECT - SOUTH PHASE

REVEGETATION PLAN

SHEET NO. 80 OF 95

REVISION #	DATE:	DESCRIPTION AND SHEET NO.:	APPROVED BY:	DATE:

REGISTERED PROFESSIONAL ENGINEER
BRIAN R. STEPHENSON
No. 65313
Exp. 9/30/07
CIVIL
STATE OF CALIFORNIA

THE COUNTY OF PLACER OR ITS OFFICERS OR AGENTS SHALL NOT BE RESPONSIBLE FOR THE ACCURACY OR COMPLETENESS OF ELECTRONIC COPIES OF THIS PLAN SHEET.

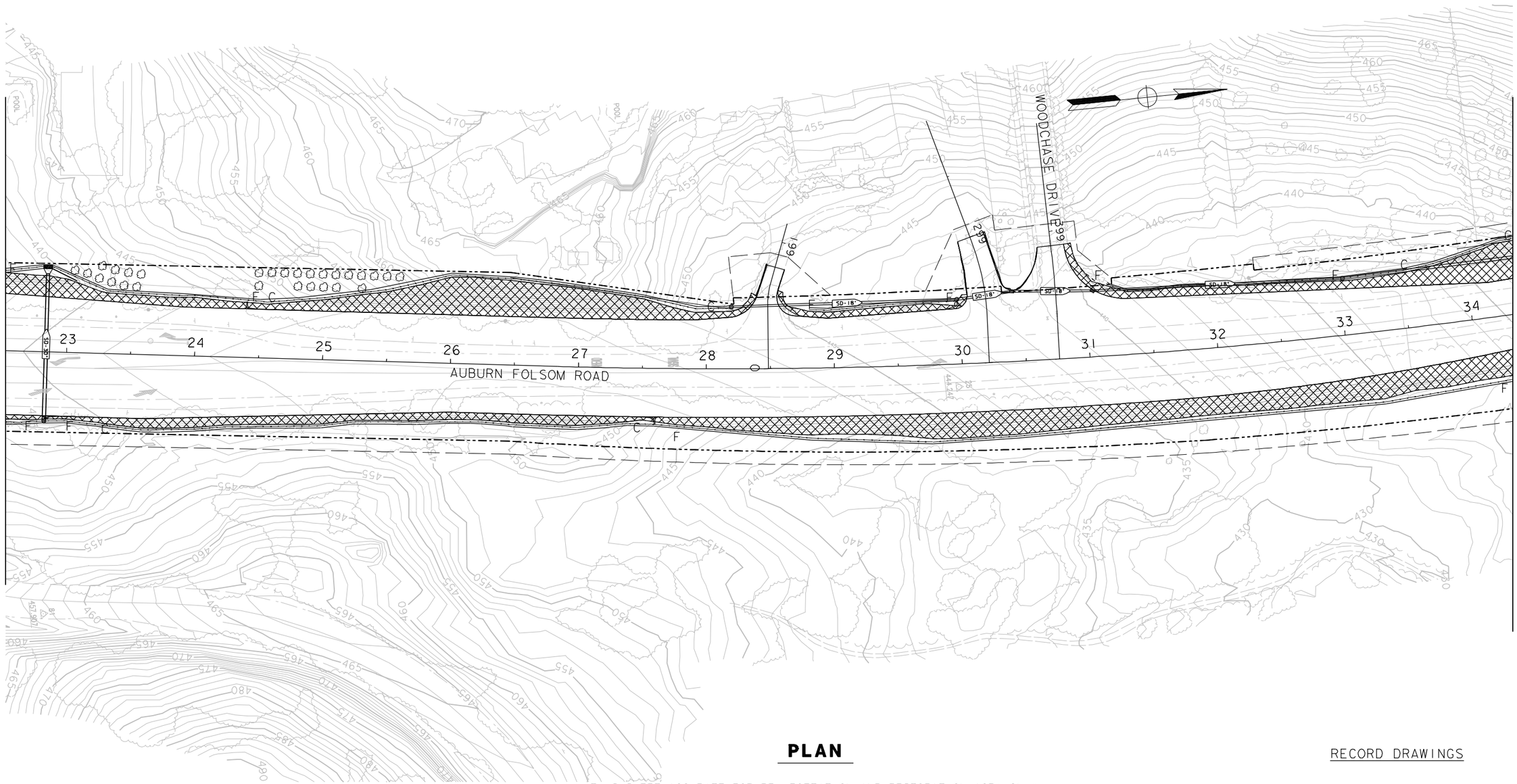

PLAN

THIS SHEET ACCURATE FOR RE-VEGETATION AND RESTORATION WORK ONLY

FOR REDUCED PLANS ORIGINAL SCALE IS IN INCHES 0 1 2 3

ALL DIMENSIONS SHOWN IN FEET UNLESS OTHERWISE NOTED

RECORD DRAWINGS

INITIALS DATE

RV-3

01/23/07

PLAN SCALE: 1" = 40'
PROFILE SCALE:
HORIZ: N/A
VERT: N/A

CONTRACT NO. 1001

DESIGNED: B. STEPHENSON 01/23/07
DRAWN: B. STEPHENSON 01/23/07
CHECKED: J. OSTDIEK 01/23/07
RECORD DRAWINGS:

DOKKEN ENGINEERING
2363 MARIPOSA AVENUE, SUITE 200
FOLSOM, CA 95630
PH: 916-858-0642 FAX: 916-858-0643

COUNTY OF PLACER DEPARTMENT OF PUBLIC WORKS
AUBURN FOLSOM ROAD WIDENING PROJECT - SOUTH PHASE

REVEGETATION PLAN

SHEET NO. 81 OF 95

REVISION #	DATE:	DESCRIPTION AND SHEET NO.:	APPROVED BY:	DATE:

REGISTERED PROFESSIONAL ENGINEER
BRIAN R. STEPHENSON
No. 65313
Exp. 9/30/07
CIVIL
STATE OF CALIFORNIA

THE COUNTY OF PLACER OR ITS OFFICERS OR AGENTS SHALL NOT BE RESPONSIBLE FOR THE ACCURACY OR COMPLETENESS OF ELECTRONIC COPIES OF THIS PLAN SHEET.

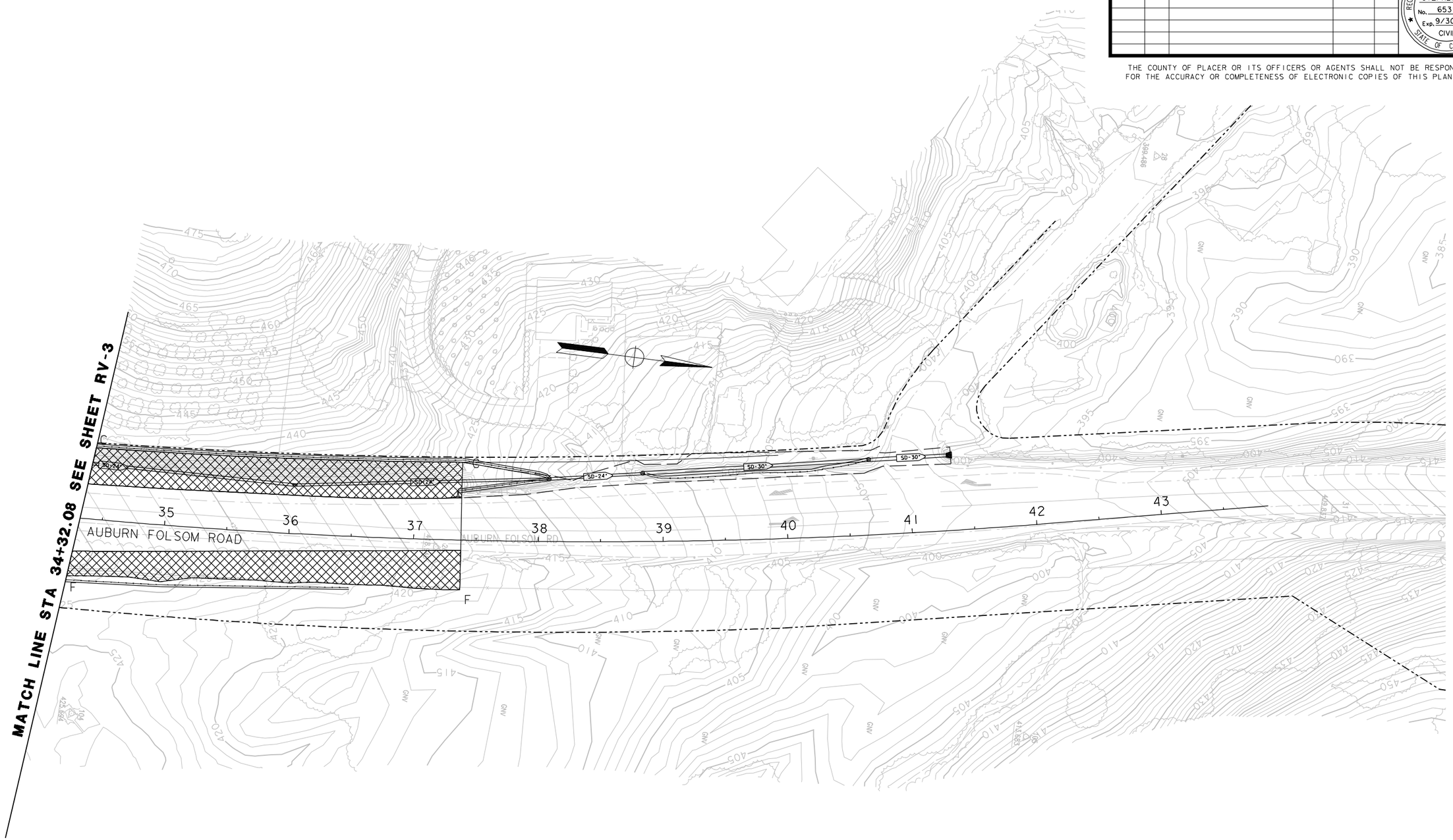

PLAN

THIS SHEET ACCURATE FOR RE-VEGETATION AND RESTORATION WORK ONLY

FOR REDUCED PLANS ORIGINAL SCALE IS IN INCHES 0 1 2 3 ALL DIMENSIONS SHOWN IN FEET UNLESS OTHERWISE NOTED

RECORD DRAWINGS

INITIALS DATE

RV-4

PLAN SCALE: 1"=40'
PROFILE SCALE:
HORIZ: N/A
VERT: N/A

CONTRACT NO. 1001

DESIGNED: B. STEPHENSON DATE: 01/23/07
DRAWN: B. STEPHENSON 01/23/07
CHECKED: J. OSTDIEK 01/23/07
RECORD DRAWING:

DOKKEN ENGINEERING
2365 IRON POINT ROAD, SUITE 200
FOLSOM, CA 95630
PH: 916-858-0642 FAX: 916-858-0643

COUNTY OF PLACER DEPARTMENT OF PUBLIC WORKS
AUBURN FOLSOM ROAD WIDENING PROJECT - SOUTH PHASE
REVEGETATION PLAN

SHEET NO. 82 OF 95

01/23/07

LEGEND

R/W

15 GALLON TREE (NATIVE SPECIES)

NOTE

1. TREE SPACING IS 10' ON CENTER
2. TREES TO BE PLANTED ON RECLAMATION PROPERTY

REVISION #	DATE:	DESCRIPTION AND SHEET NO.:	APPROVED BY:	DATE:

REGISTERED PROFESSIONAL ENGINEER
BRIAN R. STEPHENSON
No. 65313
Exp. 9/30/07
CIVIL
STATE OF CALIFORNIA

THE COUNTY OF PLACER OR ITS OFFICERS OR AGENTS SHALL NOT BE RESPONSIBLE FOR THE ACCURACY OR COMPLETENESS OF ELECTRONIC COPIES OF THIS PLAN SHEET.

PLAN

THIS SHEET ACCURATE FOR RE-VEGETATION AND RESTORATION WORK ONLY

FOR REDUCED PLANS ORIGINAL SCALE IS IN INCHES 0 1 2 3 ALL DIMENSIONS SHOWN IN FEET UNLESS OTHERWISE NOTED

RECORD DRAWINGS

INITIALS DATE

RV-5

PLAN SCALE: 1"=40'
PROFILE SCALE:
HORIZ: N/A
VERT: N/A

CONTRACT NO. 1001

DESIGNED: B. STEPHENSON DATE: 01/23/07
DRAWN: B. STEPHENSON 01/23/07
CHECKED: J. OSTDIEK 01/23/07
RECORD DRAWING:

DOKKEN ENGINEERING
2365 IRON POINT ROAD, SUITE 200
FOLSOM, CA 95630
PH: 916-858-0642 FAX: 916-858-0643

COUNTY OF PLACER DEPARTMENT OF PUBLIC WORKS
AUBURN FOLSOM ROAD WIDENING PROJECT - SOUTH PHASE

REVEGETATION PLAN

SHEET NO. 83 OF 95

01/23/07

REVISION #	DATE:	DESCRIPTION AND SHEET NO.:	APPROVED BY:	DATE:

REGISTERED PROFESSIONAL ENGINEER
BRIAN R. STEPHENSON
No. 65313
Exp. 9/30/07
CIVIL
STATE OF CALIFORNIA

THE COUNTY OF PLACER OR ITS OFFICERS OR AGENTS SHALL NOT BE RESPONSIBLE FOR THE ACCURACY OR COMPLETENESS OF ELECTRONIC COPIES OF THIS PLAN SHEET.

PLAN

THIS SHEET ACCURATE FOR RE-VEGETATION AND RESTORATION WORK ONLY

FOR REDUCED PLANS ORIGINAL SCALE IS IN INCHES 0 1 2 3

ALL DIMENSIONS SHOWN IN FEET UNLESS OTHERWISE NOTED

RECORD DRAWINGS

INITIALS DATE

RV-6

01/23/07

PLAN SCALE: 1"=40'
PROFILE SCALE:
HORIZ: N/A
VERT: N/A

DESIGNED: B. STEPHENSON DATE: 01/23/07
DRAWN: B. STEPHENSON 01/23/07
CHECKED: J. OSTDIEK 01/23/07
RECORD DRAWINGS:

CONTRACT NO. 1001

DOKKEN ENGINEERING
2363 MARIPOSA AVENUE, SUITE 200
FOLSOM, CA 95630
PH: 916-858-0642 FAX: 916-858-0643

COUNTY OF PLACER DEPARTMENT OF PUBLIC WORKS
AUBURN FOLSOM ROAD WIDENING PROJECT - SOUTH PHASE
REVEGETATION PLAN

SHEET NO. 84 OF 95

REVISION #	DATE:	DESCRIPTION AND SHEET NO.:	APPROVED BY:	DATE:

REGISTERED PROFESSIONAL ENGINEER
BRIAN R. STEPHENSON
No. 65313
Exp. 9/30/07
CIVIL
STATE OF CALIFORNIA

THE COUNTY OF PLACER OR ITS OFFICERS OR AGENTS SHALL NOT BE RESPONSIBLE FOR THE ACCURACY OR COMPLETENESS OF ELECTRONIC COPIES OF THIS PLAN SHEET.

PLAN VIEW

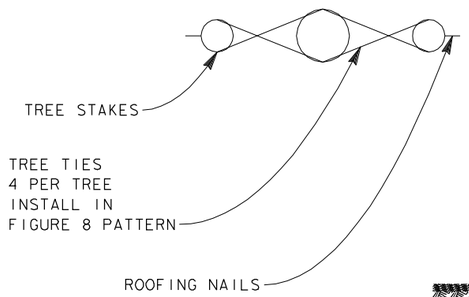

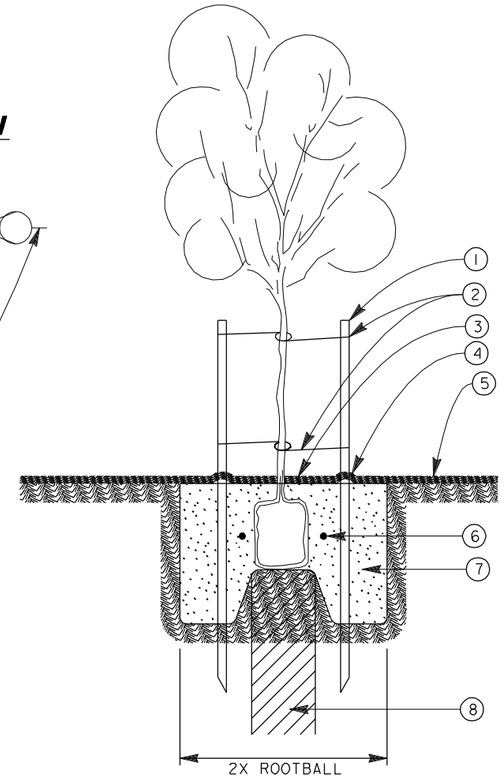

PLANTING AND TREE STAKING DETAIL

1. TREE STAKES: 2 PER #15 TREE. DO NOT ALLOW STAKES TO RUB TRUNK OR LIMBS.
2. TREE TIES: 2 PER STAKE.
3. MULCH.
4. EARTH MOUND.
5. FINISH GRADE. INSTALL CROWN 1" ABOVE FINISH GRADE.
6. PLANT TABS, SEE PLANT LIST.
7. PREPARED BACKFILL, SEE PLANT LIST.
8. EACH TREE PIT TO HAVE 10" DIA. X 10 FT. DEEP SOIL BORE. BACKFIELD BORE MATERIAL.
9. SEE CALTRANS STANDARD AND SPECIAL PROVISIONS SPECIFICATION FOR ADDITIONAL INFORMATION.

EROSION CONTROL (TYPE D)

LOCATION	(SQYD)
'A' 4+50.68 LT TO 'OH' 98+90.19 RT	2122
'OH' 98+90.19 LT TO 'PD-1' 199+20.00 RT	1083
'PD-1' 199+20.00 LT TO 'LV' 299+00.21 RT	97
'LV' 299+00.21 LT TO 'WC' 399+11.18 RT	20
'WC' 399+11.18 LT TO 'A' 37+37.92 LT	1430
'A' 4+56.53 RT TO 'A' 6+44.21 RT	198
'A' 6+68.62 RT TO 'BP' 1+85.97 RT	1235
'BP' 1+83.90 LT TO 'A' 37+37.92 RT	2670
TOTAL=	8855

HIGHWAY PLANTING (MEDIAN)

LOCATION	SQFT
'A' 8+37.68 TO 'A' 19+59.72	12168
TOTAL=	12168

15 GALLON TREES

SHEET	COUNTY R/W	B.O.R.
HP-1	90	
HP-2	42	
HP-3	28	
HP-4		
HP-5		342
HP-6		124
TOTAL=	160	466

THIS SHEET ACCURATE FOR RE-VEGETATION AND RESTORATION WORK ONLY

FOR REDUCED PLANS ORIGINAL SCALE IS IN INCHES 0 1 2 3 ALL DIMENSIONS SHOWN IN FEET UNLESS OTHERWISE NOTED

RECORD DRAWINGS

INITIALS DATE

RV-7

PLAN SCALE: N/A
PROFILE SCALE:
HORIZ: N/A
VERT: N/A

CONTRACT NO. 1001

DESIGNED: B. STEPHENSON DATE: 01/23/07
DRAWN: B. STEPHENSON 01/23/07
CHECKED: J. OSTDIEK 01/23/07
RECORD DRAWING:

DOKKEN ENGINEERING
2365 IRON POINT ROAD, SUITE 200
FOLSOM, CA 95630
PH: 916-858-0642 FAX: 916-858-0643

COUNTY OF PLACER DEPARTMENT OF PUBLIC WORKS
AUBURN FOLSOM ROAD WIDENING PROJECT - SOUTH PHASE
REVEGETATION PLAN

SHEET NO. 86 OF 95

01/23/07