ALTERNATIVE 3 - ROADWAY CROSS SECTION:

2 - 3.3 m (11') TRAFFIC LANES EACH DIRECTION
1- 1.5 m (5'±) BIKE LANE EACH DIRECTION
1- 2.4 m (8'±) PARKING LANE EACH DIRECTION
1 - 1.7 m (5'±) SIDEWALKS EACH DIRECTION
(SEE SHEET 12 FOR TYPICAL X-SECTION - ALTERNATIVE 3)

N

10 5 0 10 20
SCALE IN METERS
1 : 500
1 : 500 (22" x 34" Plan Sheets)
1 : 1000 (11" x 17" Plan Sheets)

Metric

REVISION #	DATE	DESCRIPTION AND SHEET NO.	APPROVED BY	DATED

THE COUNTY OF PLACER OR ITS OFFICERS OR AGENTS SHALL NOT BE RESPONSIBLE FOR THE ACCURACY OR COMPLETENESS OF ELECTRONIC COPIES OF THIS PLAN SHEET.

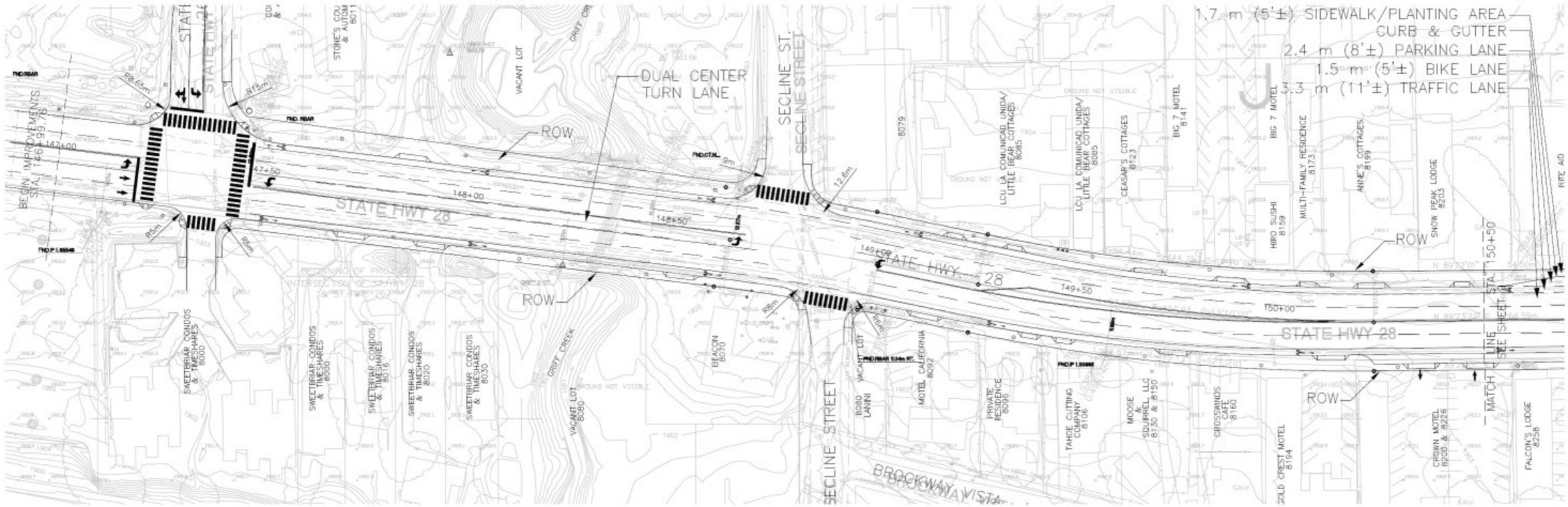

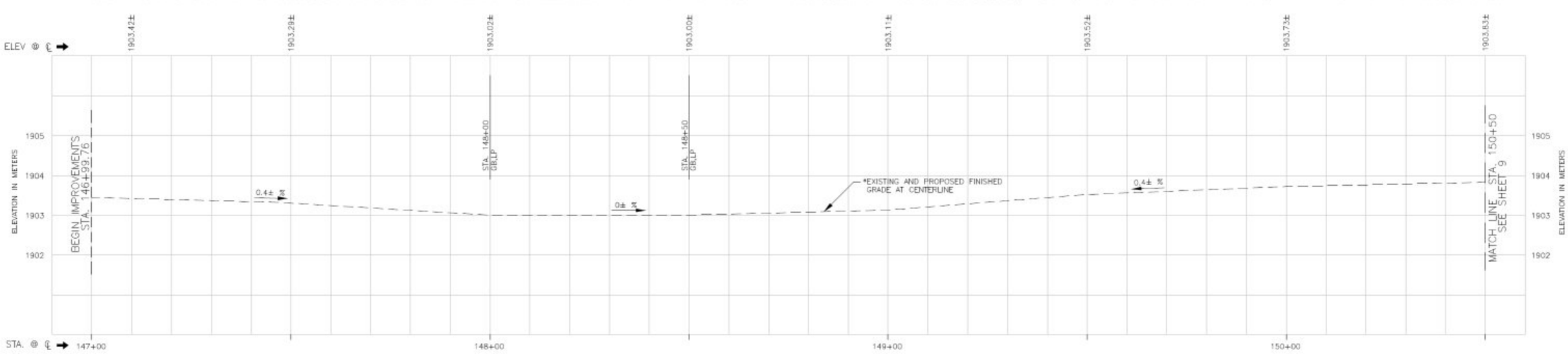

PLAN SCALE: 1:500
PROFILE SCALE:
HORIZ: 1:500
VERT: 1:50

DESIGNED: BRS
DRAWN: BRS
CHECKED: RTL
RECORD DRAWING
DATE: 12/01/16

CONTRACT NO. 73108

COUNTY OF PLACER
DEPARTMENT OF PUBLIC WORKS

KINGS BEACH COMMERCIAL CORE IMPROVEMENT PROJECT

FEASIBILITY STUDY - ALTERNATIVE 3 - PLAN, PROFILE & STRIPING LAYOUT

ALTERNATIVE 3 - ROADWAY CROSS SECTION:

2 - 3.3 m (11') TRAFFIC LANES EACH DIRECTION
1- 1.5 m (5'±) BIKE LANE EACH DIRECTION
1- 2.4 m (8'±) PARKING LANE EACH DIRECTION
1 - 1.7 m (5'±) SIDEWALKS EACH DIRECTION
(SEE SHEET 12 FOR TYPICAL X-SECTION - ALTERNATIVE 3)

REVISION #	DATE	DESCRIPTION AND SHEET NO.	APPROVED BY	DATE

Metric

THE COUNTY OF PLACER OR ITS OFFICERS OR AGENTS SHALL NOT BE RESPONSIBLE FOR THE ACCURACY OR COMPLETENESS OF ELECTRONIC COPIES OF THIS PLAN SHEET.

SCALE IN METERS 10 5 0 10 20
1 : 500
1 : 500 (22" x 34" Plan Sheets)
1 : 1000 (11" x 17" Plan Sheets)

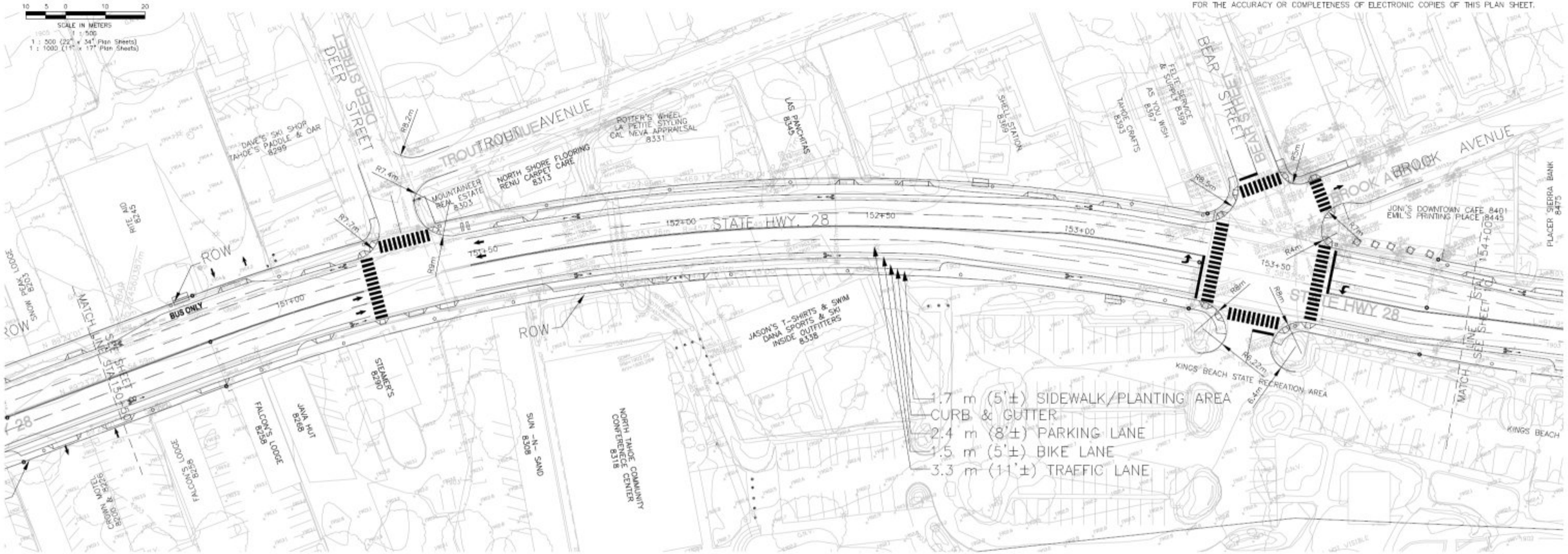

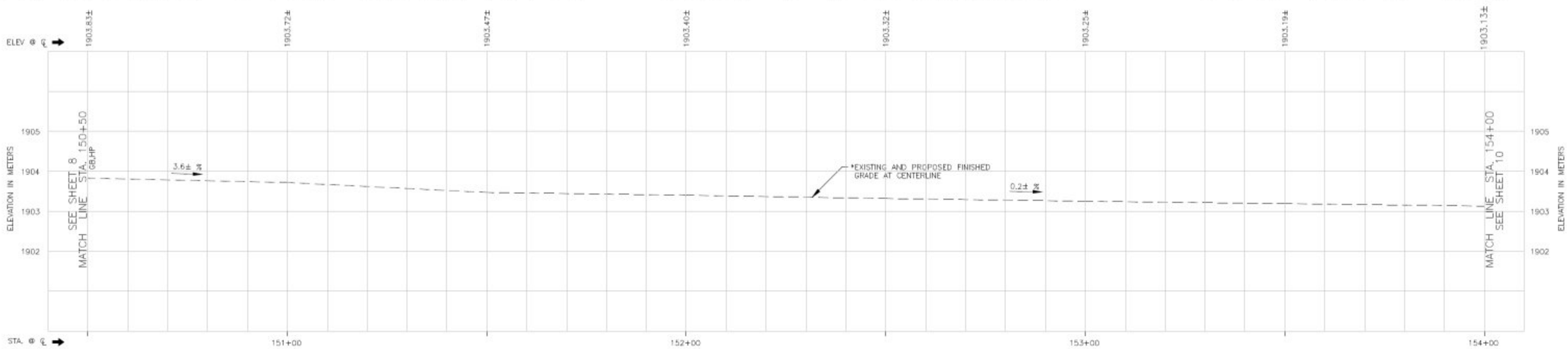

PLAN SCALE: 1:500
PROFILE SCALE:
HORIZ: 1:500
VERT: 1:50

DESIGNED: BRS
DRAWN: BRS
CHECKED: RTL 12/01/06
RECORD DRAWING:
DATE:

CONTRACT NO. 73108

COUNTY OF PLACER
DEPARTMENT OF PUBLIC WORKS

KINGS BEACH COMMERCIAL CORE IMPROVEMENT PROJECT

FEASIBILITY STUDY - ALTERNATIVE 3 - PLAN, PROFILE & STRIPING LAYOUT

SHEET NO. 8 OF 24

ALTERNATIVE 3 - ROADWAY CROSS SECTION:

2 - 3.3 m (11') TRAFFIC LANES EACH DIRECTION
1- 1.5 m (5'±) BIKE LANE EACH DIRECTION
1- 2.4 m (8'±) PARKING LANE EACH DIRECTION
1 - 1.7 m (5'±) SIDEWALKS EACH DIRECTION
(SEE SHEET 12 FOR TYPICAL X-SECTION - ALTERNATIVE 3)

REVISION #	DATE	DESCRIPTION AND SHEET NO.:	APPROVED BY:	DATE:

THE COUNTY OF PLACER OR ITS OFFICERS OR AGENTS SHALL NOT BE RESPONSIBLE FOR THE ACCURACY OR COMPLETENESS OF ELECTRONIC COPIES OF THIS PLAN SHEET.

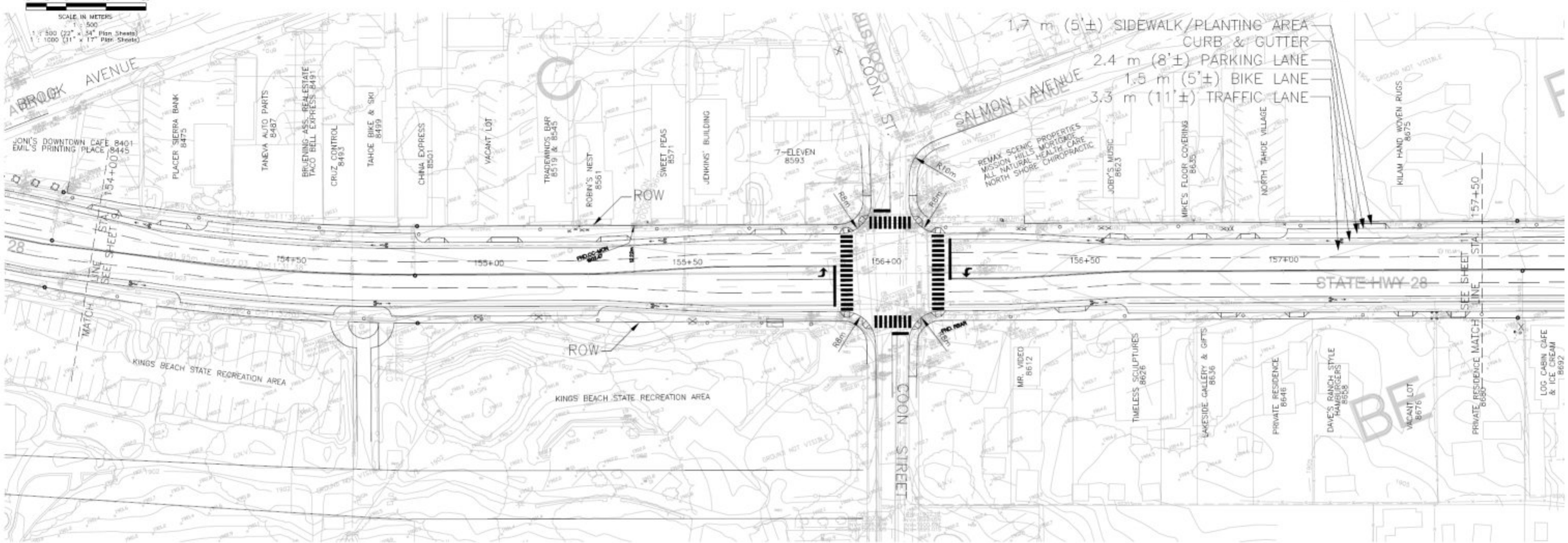

PLAN SCALE: 1:500
PROFILE SCALE:
HORIZ: 1:500
VERT: 1:50

DESIGNED: BRS
DRAWN: BRS
CHECKED: RTL
RECORD DRAWING
DATE: 12/01/06

CONTRACT NO. 73108

COUNTY OF PLACER
DEPARTMENT OF PUBLIC WORKS

KINGS BEACH COMMERCIAL CORE IMPROVEMENT PROJECT

FEASIBILITY STUDY - ALTERNATIVE 3 - PLAN, PROFILE & STRIPING LAYOUT

ALTERNATIVE 3 - ROADWAY CROSS SECTION:

2 - 3.3 m (11') TRAFFIC LANES EACH DIRECTION
1- 1.5 m (5'±) BIKE LANE EACH DIRECTION
1- 2.4 m (8'±) PARKING LANE EACH DIRECTION
1 - 1.7 m (5'±) SIDEWALKS EACH DIRECTION
(SEE SHEET 12 FOR TYPICAL X-SECTION - ALTERNATIVE 3)

REVISION #	DATE	DESCRIPTION AND SHEET NO.	APPROVED BY	DATE

Metric

THE COUNTY OF PLACER OR ITS OFFICERS OR AGENTS SHALL NOT BE RESPONSIBLE FOR THE ACCURACY OR COMPLETENESS OF ELECTRONIC COPIES OF THIS PLAN SHEET.

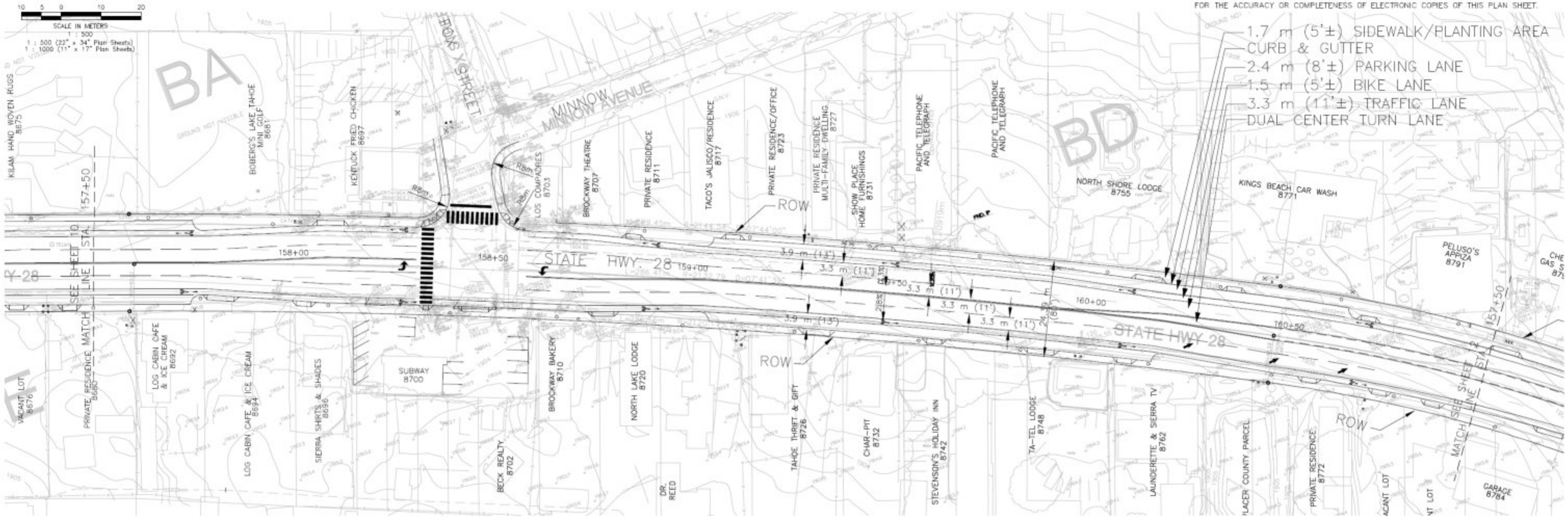

PLAN SCALE: 1:500
PROFILE SCALE:
HORIZ: 1:500
VERT: 1:50

DESIGNED: BRS
DRAWN: BRS
CHECKED: RTL
RECORD DRAWING
DATE: 12/01/06

CONTRACT NO. 73108

COUNTY OF PLACER
DEPARTMENT OF PUBLIC WORKS

KINGS BEACH COMMERCIAL CORE IMPROVEMENT PROJECT

FEASIBILITY STUDY - ALTERNATIVE 3 - PLAN, PROFILE & STRIPING LAYOUT

ALTERNATIVE 3 - ROADWAY CROSS SECTION:

2 - 3.3 m (11') TRAFFIC LANES EACH DIRECTION
1- 1.5 m (5'±) BIKE LANE EACH DIRECTION
1- 2.4 m (8'±) PARKING LANE EACH DIRECTION
1 - 1.7 m (5'±) SIDEWALKS EACH DIRECTION
(SEE SHEET 12 FOR TYPICAL X-SECTION - ALTERNATIVE 3)

REVISION #	DATE	DESCRIPTION AND SHEET NO.	APPROVED BY	DATE

THE COUNTY OF PLACER OR ITS OFFICERS OR AGENTS SHALL NOT BE RESPONSIBLE FOR THE ACCURACY OR COMPLETENESS OF ELECTRONIC COPIES OF THIS PLAN SHEET.

PLAN SCALE: 1:500
PROFILE SCALE:
HORIZ: 1:500
VERT: 1:50

DESIGNED: BRS
DRAWN: BRS
CHECKED: RTL
RECORD DRAWING
DATE: 12/01/06

CONTRACT NO. 73108

COUNTY OF PLACER
DEPARTMENT OF PUBLIC WORKS

KINGS BEACH COMMERCIAL CORE IMPROVEMENT PROJECT
FEASIBILITY STUDY - ALTERNATIVE 3 - PLAN, PROFILE & STRIPING LAYOUT

SHEET NO. 11 OF 24

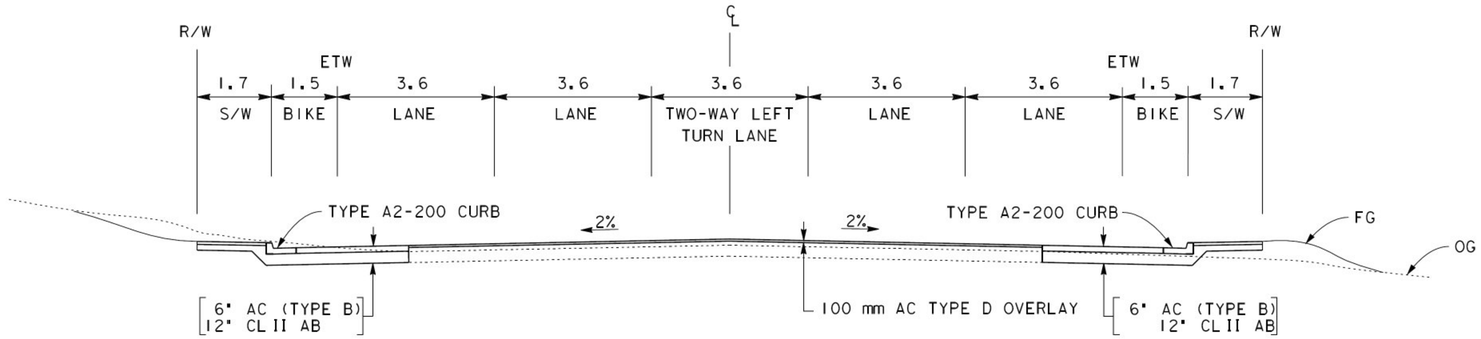

ALT 3 - SR 28
TURN LANE AREAS AND NO PARKING

STA 146+87 TO 148+75

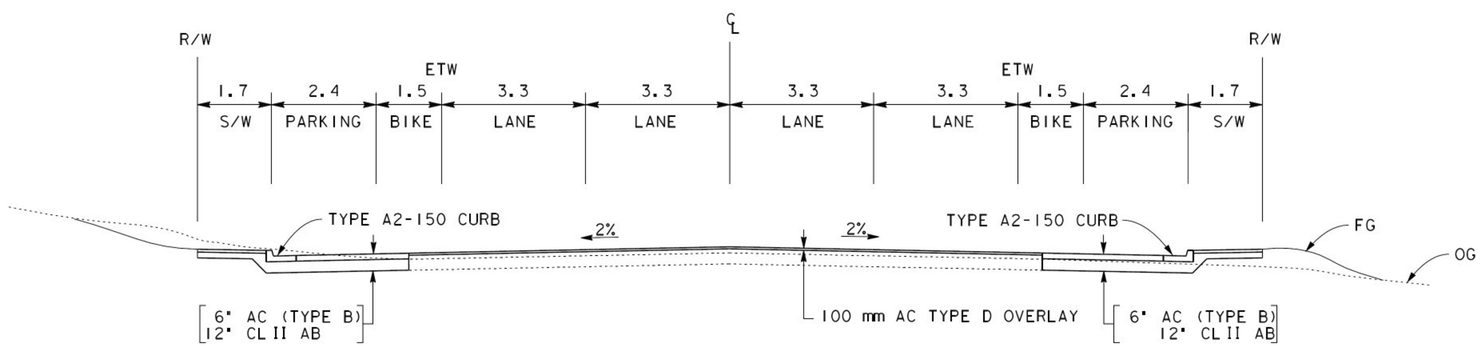

ALT 3 - SR 28
SR 267 TO CHIPMUNK

STA 146+87 TO 162+45

PLAN SCALE: NO SCALE
PROFILE SCALE:
HORIZ: NA
VERT: NA

DESIGNED:
DRAWN: REL
CHECKED: BRS
RECORD DRAWING:
DATE: 12/01/06

CONTRACT NO.

COUNTY OF PLACER
DEPARTMENT OF PUBLIC WORKS

KINGS BEACH COMMERCIAL CORE IMPROVEMENT PROJECT
FEASIBILITY STUDY - ALTERNATIVE 3 - TYPICAL SECTIONS

SHEET NO. 12 OF 24

NO SCALE | PLA-28-KP 14.8/16.5 (PM 9.2/10.3) | EA 0C9300