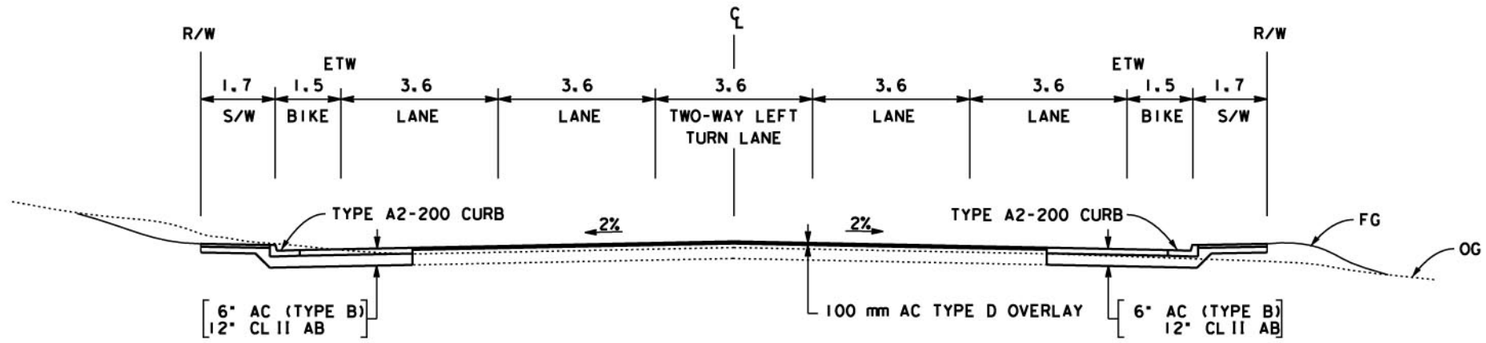

ALT 3 - SR 28
TURN LANE AREAS AND NO PARKING

STA 146+87 TO 148+75

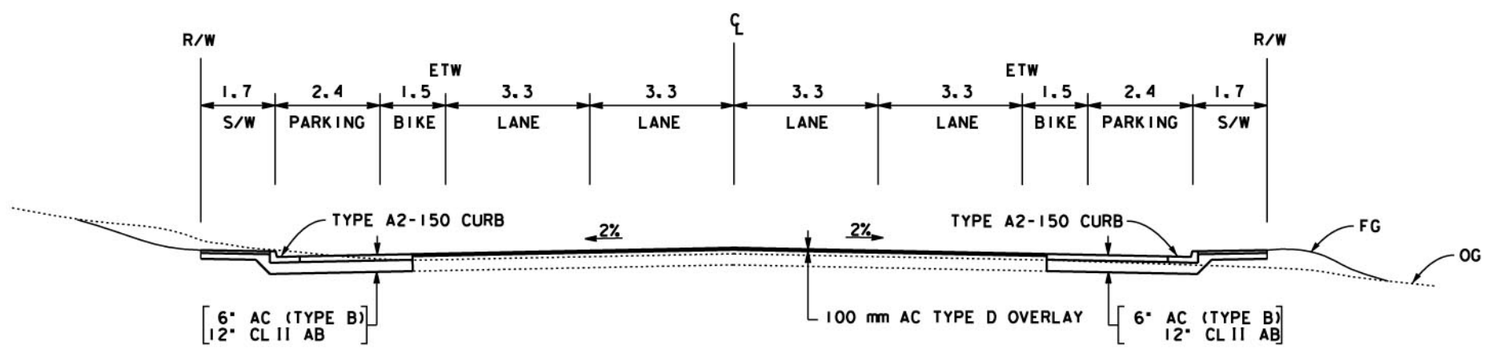

ALT 3 - SR 28
SR 267 TO CHIPMUNK

STA 146+87 TO 162+45

Source: Dokken Engineering

Figure 2-1
Kings Beach Commercial Core Improvement Project Alternatives

PLAN SCALE: NO SCALE
PROFILE SCALE:
HORIZ: NA
VERT: NA

DESIGNED:
DRAWN: REL
CHECKED: BRS
RECORD DRAWING:
DATE: 12/01/06

CONTRACT NO.

COUNTY OF PLACER
DEPARTMENT OF PUBLIC WORKS
KINGS BEACH COMMERCIAL CORE IMPROVEMENT PROJECT
FEASIBILITY STUDY - ALTERNATIVE 3 - TYPICAL SECTIONS

SHEET NO. 12 OF 18

NO SCALE | PLA-28-KP 14.8/16.5 (PM 9.2/10.3) | EA 0C9300