LETTER 12: CITY OF ROCKLIN, TERRY RICHARDSON

Response to Comment 12-1

The comment requests that PCWA consider the water supply needs of the City of Rocklin's Downtown Plan. This is a comment directed to PCWA and not a comment on the adequacy of the Draft EIR; therefore no response is required.

Response to Comment 12-2

The comment requests that the Draft EIR mitigation measures specify that the RUSP is also responsible for funding any PCWA studies that are required to determine project needs. Please see Response to Comment 4-4 for changes to Mitigation Measure 6.14-1 c) and d) that address the responsibility of preparation of the referenced reports.

Response to Comment 12-3

As described on page 6.12-46 of the Draft EIR, roadway capacity expansion projects included in the cumulative network were limited to only those projects that have full funding identified such that construction of the project is reasonably foreseeable by the cumulative horizon year of 2025. At the time the Draft EIR was prepared, the SR 65/Whitney Boulevard interchange did not have full funding identified.

Response to Comment 12-4

The LOS F conditions at the SR 65/Blue Oaks Boulevard interchange under cumulative conditions described in the comment is due to insufficient capacity on SR 65 as well as Blue Oaks Boulevard. As described on page 6.12-46 of the Draft EIR, roadway capacity expansion projects included in the cumulative network were limited to only those projects that have full funding identified such that construction of the project is reasonably foreseeable by the cumulative horizon year of 2025. At the time the Draft EIR was prepared, no fully funded roadway capacity expansion projects were identified in the vicinity of the SR 65/Blue Oaks Boulevard interchange.

Response to Comment 12-5

The Draft EIR does not state that the internal trip reduction of 44 percent was based on studies of the UC Davis campus, as stated in the comment. Page 6.12-29 of the Draft EIR states the following related to the use of trip rate data from UC Davis.

> For this study, local trip rates for university-related uses were available from previous studies conducted for the UC Davis 2003 Long Range Development Plan Final Environmental Impact Report, October 2003. This second source was based on empirical data collected at UC Davis and was generally consistent with ITE trip generation rates but provided a more stratified breakdown of trip rates according to specific uses such as on-campus versus off-campus students and faculty and staff. Therefore, the UC Davis rates are considered the best available local information for the university uses.

As noted in the paragraph, these trip rates were only applied to the university-related uses. The detailed stratification of these rates allowed for a better estimate of internal and external project trip generation because it differentiated between on-campus and off-campus students, faculty, and staff based on residence location. The trip rates for other uses are based on rates contained in Trip Generation, ITE, 2003. It should also be noted, that the UC Davis on-campus daily trip rate for

faculty and staff housing of 9.79 was higher than the daily single-family housing trip rate of 9.57 contained in ITE.

Also refer to Response to Comment 19-89.

Response to Comment 12-6

Page 6.12-44 of the Draft EIR includes two sources for potential trip generation associated with special events at the stadium. One set of rates is based on data collected at UC Davis; the second set is based on a Sacramento King's game. The resulting trip generation range is from 12,200 trips up to 18,600 trips. At this higher level, the average vehicle occupancy would be less than 1.10, which is substantially lower than the industry standard of about 2.5 persons per vehicle as noted in the quote below from the Managing Travel for Planned Special Events, FHWA, September 2003.

> A discrete/recurring event at a permanent venue that occurs on the weekend will likely have a higher vehicle occupancy factor due to families and groups of tailgaters. A vehicle occupancy factor of 2.5 persons per vehicle represents a common assumption; however for forecasting purposes, practitioners should consider a range of factors from 2.2 to 2.8 depending on local conditions.

The UC Davis rates would result in an average vehicle occupancy of about 1.6 while the King's data is lower at about 1.1. This information reflects the best available information from the Sacramento region and results in higher trip generation estimates than would be suggested by national data such as that contained in the FHWA report. Since potential events at the stadium are also unknown at this time, Impacts 6.12-11 and 6.12-12 and their associated mitigation measures require detailed traffic and parking plans for each special event that are subject to the review and approval of Placer County.

LETTER 13

CITY OF ROSEVILLE
TRADITION • PRIDE • PROGRESS

Community Development
311 Vernon Street
Roseville, California 95678-2649

January 24, 2008

Mr. Paul Thompson, Principal Planner
Placer County Planning Department
3091 County Center Drive, Suite 140
Auburn, CA 95603

Via: *Electronic and Regular Mail*

Subject: Regional University Specific Plan Draft EIR – City Comments

Dear Mr. Thompson:

Thank you for the opportunity to review and comment on the Regional University Specific Plan Draft Environmental Impact Report (DEIR). The Draft EIR was circulated within the City and listed below are the City's consolidated comments presented by department.

The City previously submitted comments on the draft Specific Plan, the Notice of Preparation (NOP), and the Administrative Draft EIR (ADEIR). These comments are addressed in letters dated: December 27, 2004, March 29, 2005, May 31, 2005, September 22, 2005, February 8, 2006, and July 19, 2006. In addition, monthly utility coordination meetings that include the County, its applicant's and consultants have also been held. The purpose of these meetings has been to clearly communicate data needs in order for the City to be a service provider for sewer treatment and delivery of recycled water to the plan boundary, as well as to coordinate issues related to the City's water wheeling agreement with PCWA. Although a great deal of coordination has occurred on the Regional University Project to date, we found that in many cases our comments below repeat comments previously provided. 13-1

Planning Department Comments
Watt Avenue

1. Consistent with prior comments, the City continues to be concerned regarding the interface of the proposed Watt Avenue alignment with the adjacent existing West Roseville Specific Plan open space Preserve (Parcel W-81). It is our understanding that an approximately 18 foot buffer is proposed. The City requests that this be expanded to a 50-foot buffer, as shown on the attached exhibit (Attachment 1: Regional University Specific Plan Watt Avenue 6-lane Arterial). A 50-foot buffer would ensure that both direct and indirect impacts to the open space Preserve would be minimized. If a buffer is infeasible, then other measures should be explored to ensure that impacts are reduced to less than significant. 13-2
2. The Draft EIR does not adequately address impacts from the Watt Avenue roadway on the W-81 open space Preserve. Figure 2-5 *Project Site and Off-site Infrastructure Areas,* shows offsite grading within parcel W-81. It is unlikely that the resource agencies would permit any grading or direct impacts within this established Preserve 13-3

area. Further, it is likely they will require Regional University to provide mitigation for both direct and indirect impacts for uses within 250 feet of the Preserve area and potentially at higher than normal ratios in recognition of the fact that impacts are to "Preserved" wetlands. 13-3 (con't.)

3. The DEIR needs to be revised to analyze the operational impacts of Watt Avenue on the W-81 Preserve. During operation, would the roadway drain toward the Preserve and if so what water quality features would be employed to ensure Preserve integrity? 13-4

4. Several parcels are not under the Regional University's land ownership for the southern segment of Watt Avenue (Richland, JMC etc.), should the Watt Avenue segment need to be constructed prior to the Sierra Vista Specific Plan building out. It is unclear how Watt Avenue would be acquired/constructed. The EIR should disclose whether condemnation is contemplated? 13-5

Extension of Utilities Through Roseville

5. The Draft EIR should identify how right of way will be acquired for all offsite infrastructure, and if there are any constraints that may make these alignments infeasible (unwilling property owners, wetland preserve constraints, existing or proposed specific plans etc.). The West Roseville Specific Plan is currently under construction. There are constraints to extending services through this area. In addition, it is important that utility needs are coordinated through the Sierra Vista Specific Plan and Creekview Specific Plan, so that infrastructure needs can be planned appropriately. Similar to Watt Avenue, the W-81 open space Preserve extends up to the current Phillip Road and proposed Blue Oaks extension. Any infrastructure planned to serve Regional University will need to avoid the Preserve area. 13-6

6. What are the dimensions of the infrastructure lines for water, sewer, recycled water, electric lines, gas lines? It is unclear for instance, what the size of the electric line is, that is proposed to go up Watt Avenue through the Sierra Vista Specific Plan from Placer Vineyards. Is this an overhead line? What size of a utility easement would be required? This is particularly important as the City is currently sizing Watt Avenue through the Sierra Vista Specific Plan area. 13-7

7. The City also has adopted growth management policy that addresses visual resources in this area. Depending on the location of this electric line (above or below ground), an analysis of consistency with City of Roseville Growth Management – Growth Areas Policy 9 should be included in the Final EIR. 13-8

Environmental Utilities Department Comments

8. The DEIR does not include sufficient information with respect to recycled water analysis and the project description. No infrastructure or technical documents are referenced. Please also refer to the City's comments on the Recycled Water Master Plan for the project, transmitted as separate memorandum (Attachment 2: City of Roseville Comments – Recycled Water Master Plan for the Regional University Specific Plan (December 6, 2007), memo dated January 15, 2008). 13-9

9. The description of available wastewater treatment capacity is incorrect. The analysis must rely on technical documents (the Sewer Master Plan for this project). This technical document is not referenced in the Draft EIR. 13-10

Specific Comments on the Document

10. Page 1-4, second bullet. Please add the following to the end of this paragraph: "The ability to treat wastewater flow from the Plan Area is contingent upon receiving this discharge permit from the RWQCB." 13-11
11. Page 1-5, 5th bullet. The California Department of Health Services is now the California Department of Public Health (DPH). Please revise references to this department and to DHS accordingly. 13-12
12. Figure 2-8: Offsite recycled water infrastructure is not shown. Please update this figure. 13-13
13. Page 2-28, Water Supply and Distribution System: 2nd paragraph: Is the statement "PCWA could rely upon groundwater until such time that surface water infrastructure is in place" consistent with County policy? 13-14
14. 3rd paragraph: The figure of 650 AFY as opposed to 772 AFY should be clarified. The 650 AFY number is based on the peak day irrigation demand being limited by the ADWF of wastewater from the project. 13-15
15. Page 2-29: First paragraph (continued from previous page): The numbers are consistent with the current draft of the Recycled Water study. 13-16
16. Page 2-50, 6th bullet: Please see comment 11 above. 13-17
17. Page 3-54, Table 3-1, Impact 6.8-4: Environmental Utilities Staff believes the conclusion of no mitigation required for this impact is incorrect. Mitigation to obtain a NPDES permit for the additional discharge above that already permitted and to reduce flooding impacts on downstream communities should be identified. 13-18
18. Page 3-60, Table 3-1, Impact 6.8-13: Environmental Utilities Staff believes the conclusion of no mitigation required for this impact is incorrect. The mitigation measure should be to obtain the NPDES permit to discharge flow from the RUSP. 13-19
19. Page 3-72, Table 3-1, Impact 6.11-3: Environmental Utilities Staff believes the conclusion of no mitigation required for this impact is incorrect. The mitigation measure should be to obtain the NPDES permit. 13-20
20. Page 6.8-26: First paragraph (continued from previous page): This paragraph as written is unacceptable. First the analysis implies the PGWWTP with RUSP results in flows less than 12 mgd. The analysis fails to consider future flows from projects that are already located within the service area boundary. Second the conclusion that there is "adequate capacity to serve the project" is incorrect. Capacity is not available within the 12 mgd at the PGWWTP. 13-21
21. Page 6.8-26: Second paragraph. Change "7.6 mgd" to "1.2 mgd" 13-22
22. Page 6.11-7: the conclusion of no mitigation required for this impact is incorrect. The mitigation measure should be to obtain a service area adjustment. 13-23
23. Page 6.11-8: First paragraph (continued from previous page): This top line is not correct. There is not existing capacity for this project at the PGWWTP. Please see previous comments on this issue. Second paragraph, first sentence: Same comment. 13-24
24. Page 6.11-9, last paragraph on page, 3rd line: Change the word "evaluated" to "adopted". 13-25

25. Page 6.11-10: Full paragraph under Table 6.11-4: Environmental Utilities Staff does not concur with the "less than significant impact" conclusion to this paragraph. This impact could be potentially significant if there is no assimilative capacity of the receiving water for discharge and therefore no ability to obtain a NPDES permit. Please be aware that this project is outside the 2005 Service area boundary and therefore not contemplated in any other environmental review. Therefore this impact is potentially significant and appropriate mitigation should be identified. 13-26

26. Page 6.11-10:Mitigation Measure: Environmental Utilities Staff believes the conclusion of no mitigation required for this impact is incorrect. The mitigation measure should be the ability to expand the PGWWTP to meet current buildout commitments and project commitments and the ability to obtain and NPDES permit for the project impacts. 13-27

27. Page 6.11-11, First paragraph: This paragraph needs to be re-written. First, the 1996 Master Plan did not address the UGAS. Second, the SPWA did not exist in 1996. This capacity was from the 1996 service area boundary. Please revise this section accordingly. 13-28

28. Page 6.14-9, State Regulations: The California Department of Health Services is now the California Department of Public Health (DPH). Please revise references to this department and to DHS accordingly. 13-29

29. Page 6.14-12, Drinking Water Quality: The California Department of Health Services is now the California Department of Public Health (DPH). Please revise references to this department and to DHS accordingly. 13-30

30. Page 6.14-16, Water Supply Description, 2nd paragraph: It should be clarified that recycled water beyond 650 AFY will be used if it is available. 13-31

31. Page 6.14-20: Impact 6.14-1, second paragraph: There should be recognition that water through this route is limited to 10 mgd based on an agreement between PCWA and the City of Roseville. 13-32

32. Page 6.14-20 and 21. Last sentence on page 20 continued on page 21: Is the use of groundwater consistent with County policies? 13-33

33. Page 6.14-23, second paragraph: The document states it is "speculative to identify the level of significance of potential environmental impacts on the City of Roseville's system." At what point does the project applicant propose that this analysis be completed? It appears this DEIR is essentially ignoring potential impacts to Roseville's water system and customers. 13-34

34. Page 6.14-25, Secondary Surface Water Supply: Does this alternative require complete analysis of the water delivery route? The last paragraph of this section (on page 6.14-26) indicates the need for multi-party agreements. What level of conceptual agreement is required to indicate this as a secondary supply source? Has a conceptual agreement been made? 13-35

35. Page 6.14-34, Backup Groundwater Supply: If groundwater supply for redundancy is only 25%, how can groundwater be used to fully supply the project area if wheeling capacity through Roseville is limited to 10 mgd? 13-36

Public Works

36. We would like to see Mitigation Measure 6.12-1 contain language specific to the RUSP participation in the Highway 65 Joint Powers Authority (JPA). While the 13-37

project is somewhat removed from the Highway 65 corridor, the EIR analysis identifies impacts along the Highway 65 mainline and at the Pleasant Grove Boulevard and Blue Oaks interchanges, and therefore, should be addressed through specific mitigation by participating in the Highway 65 JPA. 13-37 (con't.)

37. With Watt Avenue initially being the sole access into the Plan Area, the need for additional improvements along the Baseline Road corridor will be significantly accelerated. We previously requested the EIR identify up-front improvements to be constructed along Baseline Road, specifically at the intersections of Baseline Road/Fiddyment Road and Baseline Road/Watt Ave. Figure 6.12-27 identifies recommended intersection mitigation under existing plus project conditions. Is it the intent to have these identified mitigations measures constructed up-front? 13-38

38. The EIR analysis relies on the extensions of Blue Oaks Boulevard and Pleasant Grove Boulevard into the Plan Area under Cumulative conditions. While the City of Roseville supports these future extensions, as these are regionally important roadway connections, the EIR needs to identify how these improvements will be funded and constructed within unincorporated Placer County. 13-39

39. Applicable fair share obligations should be identified in the Development Agreement for mitigations identified in the EIR for impacts to the City of Roseville. 13-40

40. The roadway network figures under the Cumulative and Super Cumulative scenarios (e.g. figures 6.12-22 thru 6.12-25) do not show the "agreed" upon roadway network/alignment through the future Curry Creek and Sierra Vista plan areas. The network system should more closely match that depicted in Figure 6.12-14. For example, Watt Avenue and Westside Drive are incorrectly shown as a single roadway splitting as a "Y" north of Baseline Road. These roadways should each intersect separately with Baseline Road and extend northward without intersecting one another. 13-41

41. See attached cut sheet comments (Attachment 3: Public Works Cut Sheets).

Libraries

42. Environmental Setting, Page 6.10-37: The second sentence in the second paragraph, "The City of Roseville has recently broken ground on a new library facility at Mahany Park..." is out of date. The sentence should read, "The City of Roseville has recently opened (in November 2007) a library facility (The Martha Riley Community Library) at Mahany Park located at..." 13-42

43. Does the expanded Rocklin Library meet the adopted standards in the Placer County Library Service Plan? If so, the RUSP DEIR proposal to develop a "small branch" library measuring 4,015 square feet (p. 6.10-39, Project-Specific Impacts and Mitigation Measures) constructed no later than 2010 and administered and run by the Placer County Library District, would meet the concerns raised by the City of Roseville regarding this specific plan. 13-43

The City of Roseville is prepared to work closely with the County to address our comments so as to ensure project impacts to the City of Roseville are properly identified and fully mitigated to the extent feasible in accordance with the Settlement Agreement. Should you have any questions concerning this letter, please feel free to contact me at 774-5334.

Sincerely,

Mark Morse
Environmental Coordinator

Attachments: 1) Regional University Specific Plan Watt Avenue 6-lane Arterial; 2) City of Roseville Comments – Recycled Water Master Plan for the Regional University Specific Plan (December 6, 2007), memo dated January 15, 2008; 3) Public Works Cut Sheets

cc: John Sprague, City of Roseville
Paul Richardson, City of Roseville
Kathy Pease, City of Roseville
Rob Jensen, City of Roseville
Bill Moore, City of Roseville
Derrick Whitehead, City of Roseville
Kelye McKinney, City of Roseville
Art O'Brien, City of Roseville
Dianne Bish, City of Roseville

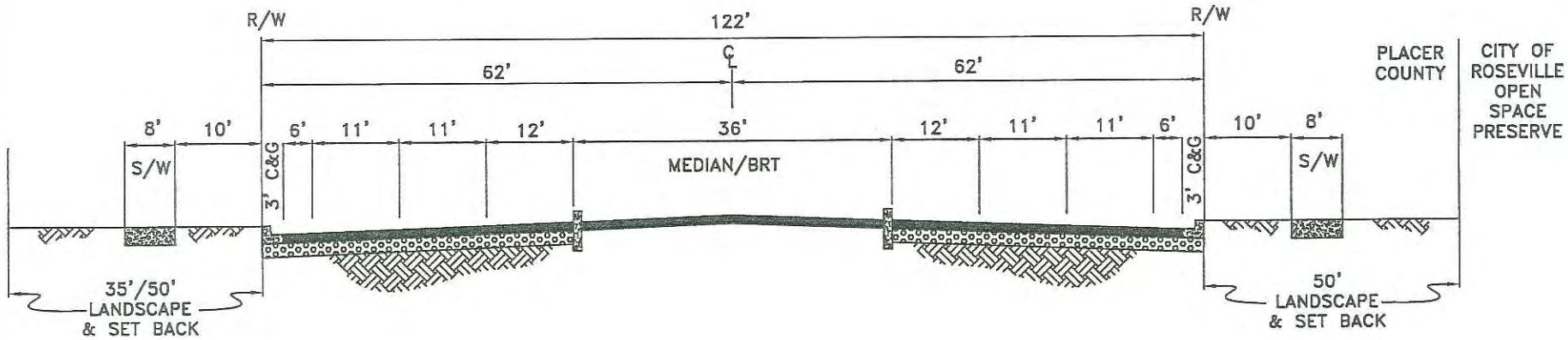

REGIONAL UNIVERSITY SPECIFIC PLAN
WATT AVENUE
6 LANE ARTERIAL

JANUARY 4, 2008

Attachment 1

D:\Documents and Settings\mckinneyjoseph\Desktop\Working\6 Lane Arterial 010408.dwg, 1/7/2008 7:56:39 AM

CITY OF ROSEVILLE CALIFORNIA

Environmental Utilities
Recycled Water
2005 Hilltop Circle
Roseville, California 95747

January 15, 2008

Subject: City of Roseville Comments – Recycled Water Master Plan for the Regional University Specific Plan (December 6, 2007)

Following are the City of Roseville comments on the Recycled Water Master Plan for the Regional University Specific Plan dated December 6, 2007. Please note the City is making comments from the standpoint of a wholesaler. The City acknowledges the fact that Placer County will own and maintain the onsite infrastructure downstream of and including the tank and booster pump station. These comments are meant as a courtesy to the Developer and the County.

1. The plan generally lacks necessary detail. It should include a per parcel breakdown of annual, average day, peak day, and peak hour recycled water demands.

2. The Recycled Water Distribution System shown in Exhibit 2 does not have sufficient detail. All mainlines should be shown.

3. It should be made clear that if sufficient recycled water supply exists at the PGWWTP, it will be delivered in place of a supplemental water supply on a day by day basis.

4. It has been the City's experience that the calculation for peak hour demand is not conservative enough. This calculation assumes uniform irrigation over the entire irrigation window during a peak day. The City has changed its design criteria for peak hour demands. An operational safety factor of 1.5 has been added to the calculation for peak hour demands per parcel. This will increase the necessary pumping capacity at the booster pump station.

Please feel free to contact me if you have any questions,

Sincerely,

Bryan Buchanan
Senior Engineer
City of Roseville
(916) 746-1716

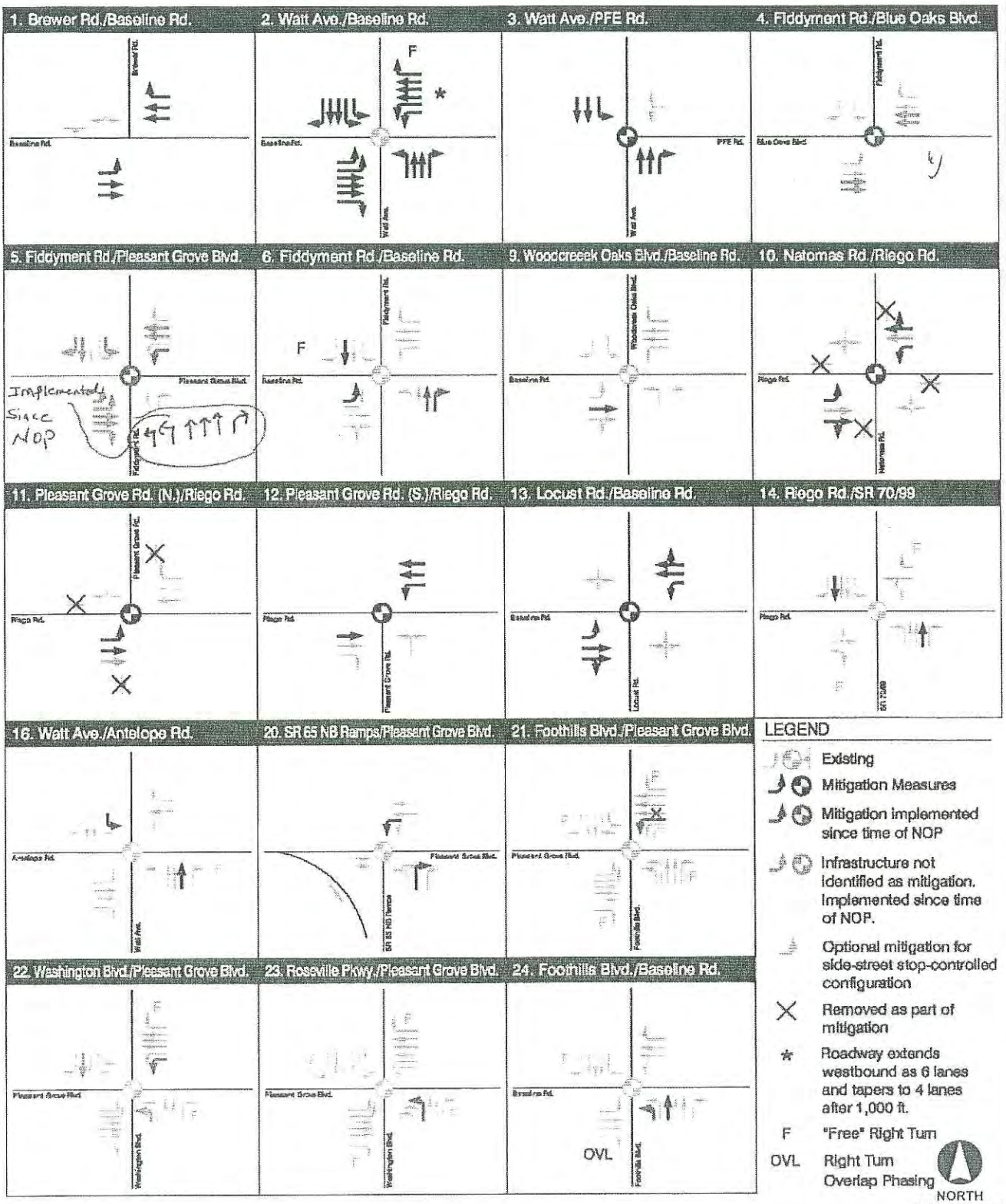

Source: Fehr & Peers, 2007.

FIGURE 6.12-27

Recommended Intersection Mitigation - Existing With Project Conditions

D50840.02

Regional University Specific Plan EIR

The Council Did Not Take Action To Remove The Widening of Cirby Way to 6 Lanes Between Roseville Rd. and Riverside Blvd. From The City's CIP. Rather, The City is initially going to make "Intersection only" improvements through the corridor.

6.12-2 *The project applicant shall pay its fair share of costs for the following mitigation projects as defined in Mitigation Measure 6.12-1.*

Segment A. *Widen Base Line Road from three to four lanes between Fiddyment Road and Foothills Boulevard.*

Segment B. *Widen Pleasant Grove Boulevard from four to six lanes between Woodcreek Oaks Boulevard and Foothills Boulevard.*

Segment C. *Widen Foothills Boulevard from four to six lanes between Base Line Road and Roseville Road.*

Segment D. *Widen Cirby Way from four to six lanes between Roseville Road and Riverside Avenue.*

The roadway projects recommended in Mitigation Measure 6.12-2A through 6.12-2C are already contained in the City of Roseville CIP because they are needed to accommodate previously approved development in the City and surrounding jurisdictions. The roadway project recommended in Mitigation Measure 6.12-2D has been removed from the City of Roseville CIP by recent City Council action and thus cannot be assumed. The need for these roadway projects could be accelerated with implementation of the RUSP.

6.12-3 The proposed project could increase daily traffic volumes using Sacramento County roadway segments, exacerbating unacceptable LOS conditions under existing plus project conditions.

As shown in Table 6.12-10 and summarized below, implementation of the proposed project would cause the LOS for one Sacramento County roadway segment to deteriorate from acceptable (i.e., LOS E or better) to unacceptable (i.e., LOS F). This is a *significant impact*.

Sacramento County Roadway Segment Impact Locations	Lanes	Existing Conditions			Existing Plus Project Conditions		
		Volume	V/C	LOS	Volume	V/C	LOS
A. Watt Ave. – Elverta Rd. to Antelope Rd.	4	28,900	0.80	D	38,000	1.06	F

Mitigation Measure

While implementation of these mitigation measures would reduce this impact to a less-than-significant level (see Table 6.12-24 for LOS after mitigation), these roadway projects are outside the jurisdiction of Placer County. Sacramento County can and should implement the suggested or similar mitigation measures but may choose not to. If the identified roadway projects are not made, the roadway segments would continue to operate at an unacceptable level. Therefore, this impact is considered ***significant and unavoidable***.

6.12-3 *The project applicant shall pay its fair share of costs for the following mitigation project as defined in Mitigation Measure 6.12-1.*

Segment A. *Widen Watt Avenue from four to six lanes between Elverta Road and Antelope Road.*

Attachment 3 (page 2 of 2)

LETTER 13: CITY OF ROSEVILLE, MARK MORSE/BRYAN BUCHANAN

Response to Comment 13-1

The comment is noted. The City's comments are addressed in the responses to comments below.

Response to Comment 13-2

The comment requests that the approximately 18-foot buffer proposed between the Watt Avenue alignment and the existing West Roseville Specific Plan open space preserve be expanded to a 50-foot wide buffer to ensure that both direct and indirect impacts on the open space preserve would be minimized. The comment states that if the expanded buffer is infeasible, then other measures should be explored to ensure that impacts are reduced to a less-than-significant level. However, the comment does not identify the specific direct or indirect impacts that would be minimized by widening the buffer.

With regard to water quality, best management practices (BMPs) would apply to all components of the project, including construction and operation of all on-site and off-site improvements, as required in Mitigation Measures 6.8-6 and 6.8-7 on pages 6.8-29 and 6.8-30, respectively. Therefore, the Draft EIR addresses potential impacts on the West Roseville Specific Plan open space preserve, and the County believes that no changes to the project or additional mitigation measures are necessary.

Response to Comment 13-3

The comment states that the Draft EIR does not adequately address impacts associated with Watt Avenue on the City of Roseville's proposed open space preserve. Please see Response to Comment 13-2, above. Contrary to the assertion in the comment, the RUSP project does not extend into or propose grading within the West Roseville Specific Plan area's open space preserve. The City's W-81 preserve is east of the eastern portion of the RUSP project site, north of the proposed "A" Street. The off-site grading shown in Figure 2-5 (see Draft EIR page 2-12) would occur on land south of the West Roseville Specific Plan area, within the proposed Sierra Vista Specific Plan area. Regarding resource agency permitting, the project would comply with all requirements necessary to obtain permits that may be required from resource agencies and other permitting authorities.

Response to Comment 13-4

The comment expresses concern that during project operation drainage from Watt Avenue would flow into the West Roseville Specific Plan area's open space preserve, which could affect the integrity of the preserve. As stated on page 6.8-11 of the Draft EIR, Placer County is required to operate under the National Pollutant Discharge Elimination System (NPDES) Municipal Stormwater Phase II Permit. Post-construction measures under the Phase II General Permit require the County to implement structural and non-structural BMPs that would mimic pre-development quantity and quality runoff conditions from new development. In addition, Mitigation Measure 6.8-7 on pages 6.8-30 and 6.8-32 of the Draft EIR would ensure that operational water quality impacts of the RUSP project would be reduced to less-than-significant levels. Specifically, Mitigation Measure 6.8-7(e) on page 6.8-32 requires that stormwater runoff from the proposed project's on- and off-site impervious surfaces (including roads) shall be collected and routed through specially designed water quality treatment facilities (BMPs) for removal of pollutants of concern (i.e., sediment, oil/grease, etc.), as approved by the Placer County Engineering and Surveying Department. Therefore, the required mitigation measures would ensure that drainage from Watt Avenue would not affect the integrity of the preserve. In addition to the measures above, as discussed in section 6.8, Hydrology and Water

Quality, the topography of the project area is sloped from east to west; therefore, the natural flow would be to the west, away from the West Roseville Specific Plan Area.

Response to Comment 13-5

The comment states that the Draft EIR does not make clear how land not under RUSP applicant ownership would be acquired for construction of the Watt Avenue extension, and that the EIR should disclose whether condemnation of the land is contemplated. The acquisition and/or condemnation of land is not a CEQA issue. The Draft EIR analyzes the physical effects of constructing the Watt Avenue extension.

Response to Comment 13-6

The acquisition of land is not a CEQA issue, and the Draft EIR analyzes the physical effects of the construction of off-site infrastructure described in the RUSP. As discussed in Responses to Comments 13-2 and 13-3, the proposed project does not include construction within the W-81 open space in the West Roseville Specific Plan area. The County would coordinate with the City regarding any shared infrastructure. In addition, as detailed on pages 2-51 through 2-53 of the Draft EIR, the RUSP project would be subject to the County's subsequent conformity review process in which the County will determine whether any subsequent proposed development entitlements are consistent with the Specific Plan and, thus, whether the subsequent development proposal was analyzed in the EIR. Furthermore, utility infrastructure (e.g., electricity, nature gas, water, wastewater, recycled water) to serve the RUSP project would be constructed in accordance with the requirements of the individual service providers, including requirements for environmental review, if other than assumed in the RUSP EIR.

Response to Comment 13-7

The Draft EIR analyzed the construction and operational impacts of the installation of utility infrastructure. The analysis included ground disturbance that would result from construction of utility infrastructure as well as potential service, treatment, or capacity issues that could require the construction of new facilities.

The size and location for the sewer, water, and recycled water infrastructure is contained in the applicable master plans, which were made available to the City for review and referenced in the Draft EIR. The utility provider would determine whether the electric line along Watt Avenue would be underground or overhead. As stated on page 2-11 of the Draft EIR, the Watt Avenue extension would be approximately 9,250 feet long with a roadway easement and public utility easement width of 126 feet. The public utility easement would meet the requirements of the utility providers.

Response to Comment 13-8

The comment states that the RUSP EIR should include an analysis of consistency with the City of Roseville's Growth Area policies the utility provider would install the power lines above ground. The utility provider would determine whether the electric line along Watt Avenue would be underground or overhead and the provider would need to make a determination about consistency with applicable policies pertaining to visual resources.

Response to Comment 13-9

The commenter states that the Draft EIR does not include sufficient information with respect to recycled water analysis in the project description, and no infrastructure or technical documents are

referenced. However, the project description identifies the proposed use of recycled water (for irrigation purposes), the location of proposed recycled water infrastructure (see first full paragraph on page 2-13), the source of the recycled water (the Pleasant Grove Waste Water Treatment Plant), the owner of the recycled water infrastructure within Placer County (Placer County) and the City of the wholesaler for the recycled water (the City of Roseville). The primary purpose of the Project Description is to describe the proposed project and its elements; this is not the appropriate chapter of the Draft EIR to include recycled water analysis or reference to technical documents. Potential environmental impacts resulting from the provision of recycled water to the proposed project are analyzed in sections 6.11, Public Utilities, and 6.14, Water Supply, of the Draft EIR. The commenter also requests that the County refer to the City of Roseville's attached comments on the Recycled Water Master Plan for the Regional University Specific Plan. The letter provides comments specific to the Recycled Water Master Plan, including comments regarding a lack of necessary detail in the Master Plan, which are not pertinent to the Draft EIR and are therefore not addressed in this response. The letter also requests that the Master Plan make clear that if sufficient water supply exists at the Pleasant Grove Waste Water Treatment Plant, it will be delivered in place of a supplemental water supply on a day-by-day basis. This comment is noted. The letter also comments that the calculation for peak-hour demand in the Master Plan is not conservative enough and an operational safety factor of 1.5 has been added to the calculation for peak hour demands per parcel, which will increase the necessary pumping capacity at the booster pump station. The comment is noted; however, an increase in the pumping capacity will not change the physical impacts analyzed in the Draft EIR.

Response to Comment 13-10

The comment states that the description of available wastewater treatment capacity is incorrect. The comment also states that the wastewater analysis must rely on the Sewer Master Plan for the RUSP project, which, the commenter states, is not referenced in the Draft EIR. The statement is incorrect. As stated on page 6.11-5 of the Draft EIR: "Wastewater generation factors to predict treatment capacity were developed in a technical memorandum prepared for the City of Roseville to project future wastewater generation rates." These generation rates were applied to the proposed land uses for the proposed project in the *Regional University Specific Plan Sewer Master Plan*, November 2, 2007. The Draft EIR acknowledges that other projects would be developed concurrently with the RUSP and that these projects would rely on capacity at the PGWWTP and, therefore, expansion could be required to serve the project. Nonetheless, to clarify, the text in Impacts 6.11-1 through 6.11-3 on pages 6.11-7 through 6.11-10 has been modified. The new text is shown below (without underline and strikeout).

6.11-1 The proposed project could fail to meet the wastewater treatment requirements of the Regional Water Quality Control Board.

The proposed project would generate an ADWF of 1.17 mgd. The current average dry weather flow (ADWF) at the PGWWTP is 6.5 mgd. The proposed project is outside the South Placer Wastewater Authority (SPWA) 2005 service area boundary (2005 SAB) and, as stated on page 2-50 in Chapter 2, Project Description, the expanded SAB would need to be approved by the SPWA Board and the Participants to allow wastewater from the RUSP to be treated by PGWWTP. In addition, serving areas outside the 2005 SAB could require increased discharge to Pleasant Grove Creek with resulting potential degradation of surface water quality. However, as stated on page 2-49 in Chapter 2, Project Description, prior to increasing discharge beyond currently permitted levels, the treatment plant operator would be required to obtain and comply with a new or amended NPDES discharge permit. Compliance with requirements of the new discharge permit would ensure that discharges from the PGWWTP would not exceed wastewater treatment requirements. Analyses

contained in the *Roseville Regional Wastewater Treatment Service Area Master Plan Draft EIR*[3] (1996 Master Plan EIR) demonstrate that treatment process improvements are available to ensure discharges associated with flows of up to 29.5 ADWF can be discharged to Pleasant Grove Creek without exceeding wastewater treatment requirements. As such, potential water quality impacts due to required increases in wastewater treatment would be ***less than significant***.

Mitigation Measure

None required.

6.11-2 The proposed project could require or result in the construction of new wastewater treatment facilities or expansion of existing facilities.

The PGWWTP has a permitted capacity of 12 mgd ADWF to serve development within the 2005 SAB. At this time, the PGWWTP uses 6.5 mgd of its permitted 12 mgd of ADWF capacity. The proposed project, which is outside the 2005 SAB, would generate 1.17 mgd ADWF of wastewater requiring treatment at the PGWWTP. The City of Roseville analyzed flows from areas outside the 2005 SAB in the *South Placer Regional Wastewater and Recycled Water Systems Evaluation* Report (June 2007). That analysis projected 24.1 mgd ADWF for buildout of the Pleasant Grove Service Area, which includes the 2005 SAB, in addition to the eight UGAs specified in the analysis, including RUSP.[4] The impacts of expanding the PGWWTP to increase treatment capacity and discharge up to 29.5 mgd ADWF has previously been addressed in two environmental impact reports; *Roseville Regional Wastewater Treatment Service Area Master Plan Draft EIR*[5] (1996 Master Plan EIR) prepared by Environmental Science Associates and Montgomery Watson in May 1996, and the *West Roseville Specific Plan EIR*[6] prepared by EIP Associates in September 2003.

In the event that additional capacity is required prior to completion of the proposed project, additional treatment capacity could be obtained, as discussed in the 1996 Master Plan EIR. Nonetheless, as more development occurs in the City of Roseville and within the UGAs, the treatment capacity at the PGWWTP could be exceeded prior to completion of the proposed project. If that were to occur, the PGWWTP would need to be expanded in order to accommodate demand associated with the project. Therefore, this impact is considered *potentially significant*.

Mitigation Measure

Implementation of the following mitigation measures would ensure that there is sufficient capacity at the PGWWTP at the time development within the Plan Area occurs, thus reducing the impact to a ***less-than-significant level***.

6.11-2 a) *Commitments from the wastewater treatment provider to receive anticipated flows from the Specific Plan area at the PGWWTP shall be secured by Placer County prior to County approval of improvement plans for wastewater*

3 City of Roseville, *Roseville Regional Wastewater Treatment Service Area Master Plan Draft EIR,* May 1996, SCH # 93092079.

4 RMC, *South Placer Regional Wastewater and Recycled Water Systems Evaluation Report*, June 2007.

5 City of Roseville, *Roseville Regional Wastewater Treatment Service Area Master Plan Draft EIR,* May 1996, SCH # 93092079.

6 City of Roseville, *West Roseville Specific Plan and Sphere on Influence Amendment EIR*, September 15, 2003, SCH # 2002082057.

collection and transmission infrastructure. The County shall comply with General Plan Policy 4.D.2, which requires written certification from the service provider that either existing services are available or needed improvements will be made prior to occupancy to meet wastewater demands of the Specific Plan area.

b) *Specific Plan proponents shall participate financially through connection fees and other financial mechanisms in the construction of additional wastewater treatment capacity sufficient to accommodate projected flows and treatment at the PGWWTP. In addition, Specific Plan proponents shall prepare, or shall provide a fair share contribution toward the preparation of any additional CEQA analysis that may be required for plant modifications and/or expansions.*

c) *For each increment of new development within the Specific Plan area, the County shall confirm that all necessary permits (e.g., NPDES) are in place for the PGWWTP to discharge additional treated effluent in the amounts associated with the new development. This shall include a determination that development timing will not impede other development for which entitlements have been issued. The requirement for such a showing shall be made a condition of any small lot tentative map approval associated with the new development and shall be verified by the County prior to recordation any final map associated with the new development. Where no small lot tentative map and final map are required prior to non-residential development having the potential to increase wastewater flows, the requirement for such verification, to be demonstrated no later than the time of issuance of building permits, shall be made a condition of approval of project-level discretionary approvals analogous to issuance of small-lot tentative maps.*

d) *Approval of the Specific Plan shall be premised on concurrent County approval of a financing plan that will provide for funding the necessary wastewater collection facilities needed to serve the Specific Plan area, and implemented through approval for formation of a County Service Area (CSA) and a corresponding funding mechanism.*

e) *The Specific Plan proponents shall construct or participate financially in the construction of off-site wastewater conveyance capacity, including lift stations, to accommodate projected wastewater flows that would be generated by development of the Specific Plan.*

f) *Adequately sized on-site collection facilities, including lift stations, shall be installed for each subdivision in the Specific Plan area concurrent with road construction for individual subdivisions. A "backbone" conveyance system sufficient to serve each subdivision shall be installed prior to issuance of building permits for that subdivision.*

g) *The Regional University Specific Plan Sewer Master Plan shall be revised prior to submission of any wastewater-related improvement plans to include a detailed description of necessary on-site and off-site lift station components. The Master Plan shall include a plan for dealing with power and pump failure, and pump maintenance. The plan shall identify how necessary pumping capacity will be replicated in the event of pump failure or pump maintenance,*

and shall provide for on-site back-up power sufficient to run pumps and any odor scrubbers, in the event of power failure. Each lift station shall include a wastewater storage component in the form of an enclosed reservoir or tank sufficient to deal with temporary emergency conditions while backup systems are brought on line, in accordance with sizing standards utilized by the County Department of Facility Services.

Cumulative Impacts and Mitigation Measures

The cumulative setting for impacts related to wastewater is the developments within the SPWA 2005 service area boundary that would contribute wastewater flows to the PGWWTP.

6.11-3 The proposed project, in combination with other developments that would contribute wastewater flows to the PGWWTP, could fail to meet the wastewater treatment requirements of the Regional Water Quality Control Board.

The projected flows to the PGWWTP at buildout, including buildout of the 2005 SAB and the urban growth areas (which include the proposed project), is estimated to be 24.1 mgd ADWF As discussed in the 1996 Wastewater Master Plan EIR, the potentially significant impacts to Pleasant Grove Creek associated with discharges of up to 29.5 mgd ADWF on water temperature, trace metals, organics, and dissolved oxygen were all reduced to less-than-significant levels[7] with mitigation measures included in the 1996 Wastewater Master Plan, summarized in Table 6.11-4. An increase in the permitted level of discharge could be required prior to buildout, which may result in the need to obtain additional permits from the RWQCB to increase the discharge amount.

TABLE 6.11-4

ADWF CAPACITY AT PCWWTP URBAN GROWTH AREA IMPACTS AND MITIGATIONS FOR PGWWTP 29.5 MGD DISCHARGE TO PLEASANT CREEK

Criteria	Impact	Significance	Mitigation Measures from 1996 Master Plan EIR
Temperature	Additional flows from UGAs will increase thermal load of Creek.	Potentially significant, but less than significant after mitigation monitoring	MM 7-4: Install cooling towers.
Trace Metals/ Organic Pollutants	Increased flows will reduce dilution from Creek, resulting in a greater concentration of effluent constituents.	Potentially significant, but less than significant after mitigation monitoring	MM 7-2: Install advanced treatment facilities. MM 7-3: Use pre-treatment metal source controls.
Dissolved Oxygen	Biochemical oxygen demand of effluent should be under 3 mg/L to prevent Potentially Significant decreases in dissolved oxygen levels in Creek	Potentially significant, but less than significant after mitigation monitoring	MM 7-2: Install advanced treatment facilities. MM 7-3: Use pre-treatment metal source controls
Riparian Habitat	Loss of oak trees due to effluent discharge	Potentially significant, then Significant after mitigation monitoring	MM 4-13: Oak mortality monitoring along Creek

Source: *Merritt Smith Consulting, Cumulative Analysis of UGA Impacts on Water Quality and Aquatic Resources in Pleasant Grove Creek, Roseville, California, and January 15, 2006.*

7 Merritt Smith Consulting, *Cumulative Analysis of UGA Impacts on Water Quality and Aquatic Resources in Pleasant Grove Creek*, *Roseville, California*, January 15, 2006.

The current permitted capacity of the PGWWTP is 12 mgd, which is available only to serve development within the 2005 SAB. Any request to expand the 2005 SAB would require appropriate CEQA review and any expansions of capacity beyond 12 mgd would require additional permits for discharge into Pleasant Grove Creek. The demand projected for buildout of the 1996 SAB in the 1996 Master Plan EIR was 20.7 mgd; the recent analysis prepared for the City of Roseville for demand in the UGAs found that demand in the 1996 service area boundaries would actually be 14.6 mgd due to revised flow estimates.[8] As mentioned previously, treatment capacity expansion to meet the projected 24.1 mgd of all the UGAs analyzed by the City[9] will be required. The extent to which the PGWWTP would need to expand to treat additional wastewater beyond the 24.1 mgd would depend on which projects would use the plant, subject to approval of the SPWA. Wastewater flows from outside the 2005 SAB would need to be analyzed, since that was the selected alternative in the Wastewater Master Plan EIR. Expansion of the plant to serve such unanticipated flows could result in impacts on the environment associated with construction to increase the capacity of the plant, loss of natural and other resources to expand the footprint of the facility, and degradation of water quality as a result of increased discharges to Pleasant Grove Creek. However, as noted above, prior to any expansion of the PGWWTP, the plant operator would be required to obtain and comply with a RWQCB permit. Compliance with the requirements in the permit would ensure that discharges from the PGWWTP would not exceed wastewater treatment requirements. This would be a ***less-than-significant impact.***

Mitigation Measure

None required.

Response to Comment 13-11

The second bulleted item on page 1-4 of the Draft EIR is revised as follows:

- **National Pollutant Discharge Elimination System** Permit Modification (Regional Water Quality Control Board)

  Expansion of treatment capacity of the PGWWTP beyond that planned for in the 1996 Wastewater Master Plan EIR would require modification to the PGWWTP's NPDES permit to accommodate additional effluent discharges to Pleasant Grove Creek. Such modification would require approval by the Central Valley Regional Water Quality Control Board. If any modifications to the National Pollutant Discharge Elimination System (NPDES) Permit are required, the WWTP operator would address modifying the allowable discharge amounts. Additional environmental review may be required as part of the approval process. The ability to treat wastewater flow from the Plan Area is contingent upon receiving this discharge permit from the RWQCB.

8 RMC, *South Placer Regional Wastewater and Recycled Water Systems Evaluation Report*, June 2007.
9 RMC, *South Placer Regional Wastewater and Recycled Water Systems Evaluation Report*, June 2007.

Response to Comment 13-12

The fifth bulleted item on page 1-5 of the Draft EIR is revised as follows:

- **Public Water System Wells** (Placer County Water Agency, California Department of Public Health ~~Services~~ (CDPH), and Placer County Division of Environmental Health Services)

  The project includes the use of groundwater wells for water supply. The Placer County Division of Environmental Health Services would be responsible for issuing well construction permits for the public water system wells. The ~~California Department of Health Services (DHS)~~ CDPH is responsible for implementing the federal Safe Drinking Water Act of 1974 and its updates, as well as California statutes and regulations related to drinking water. As part of their efforts, the ~~DHS~~ CDPH inspects and provides regulatory oversight for public water systems within California.

Response to Comment 13-13

Figure 2-8 is revised to identify the location of off-site recycled water infrastructure. The revised figure is included as Figure 2-8a in Chapter 2, Text Changes, of this Final EIR

Response to Comment 13-14

The statement in the Draft EIR that PCWA could rely upon groundwater until such time that surface water infrastructure is in place is consistent with the American River Basin Conjunctive Use Program (ARBCUP), which encourages the use of surface water and groundwater resources. The County is a participant of the ARBCUP. The statement is consistent with County policy.

Response to Comment 13-15

The comment is noted, and the third paragraph on page 2-28 of the Draft EIR is revised as follows:

> The build-out demand for the Plan Area would be 3,220 afy, which includes 772 afy of public-area irrigation demand. Approximately 650 afy of this irrigation demand could be served by recycled water from the PGWWTP. The City of Roseville has indicated that the amount of recycled water that would be generally made available to the proposed project would be based upon the average dry weather flow of wastewater from the proposed project. The 650 afy figure, therefore, assumes the peak day irrigation demand served by recycled water would be limited by the average dry weather flow of wastewater from the proposed project, which was determined to be 650 afy. The build-out demand for potable water and supplemental water sources, including the 120 afy needed to supplement the recycled water supply, would be 2,570 afy. Voluntary conservation measures could lead to a five percent reduction in the demand for potable water during dry and critical years.

Response to Comment 13-16

The comment is noted.

Response to Comment 13-17

The sixth bulleted item on page 2-50 of the Draft EIR is revised as follows:

- **Public Water System Wells**

  The project includes the use of groundwater wells for water supply. The Placer County Division of Environmental Health Services would be responsible for issuing well construction permits for the public water system wells. The California Department of Public Health ~~Services (DHS)~~ (CDPH) is responsible for implementing the federal Safe Drinking Water Act of 1974 and its updates, as well as California statutes and regulations related to drinking water. As part of their efforts, the DHS inspects and provides regulatory oversight for public water systems within California.

Response to Comment 13-18

The comment requests that mitigation be identified to obtain a NPDES permit for increased stormwater discharge from RUSP. The commenter is referred to the third bulleted item on page 2-49 of the Draft EIR under the subsection Required Permits and Approvals, which states:

> Expansion of treatment capacity of the PGWWTP beyond that planned for in the 1996 Wastewater Master Plan EIR would require modification to the PGWWTP's NPDES permit to accommodate additional effluent discharges to Pleasant Grove Creek. Such modification would require approval by the Central Valley Regional Water Quality Control Board. If any modifications to the National Pollutant Discharge Elimination System (NPDES) Permit are required, the WWTP operator would address modifying the allowable discharge amounts. Additional environmental review may be required as part of the approval process.

The commenter is also referred to Mitigation Measure 6.11-2(c) on page 6.11-8, which requires the County to confirm that all necessary discharge permits (e.g., NPDES) are in place for each increment of new development within the RUSP. Therefore, additional mitigation requiring acquisition of an NPDES permit for discharge above that already permitted is not required. The conclusion of no mitigation required is based on the finding of a less-than-significant impact related to off-site flooding resulting from project wastewater flows and discharges from the PGWWTP (see pages 6.8-25 and 6.8-26 of the Draft EIR).

Response to Comment 13-19

Please see Response to Comment 13-18.

Response to Comment 13-20

Please see Response to Comment 13-18.

Response to Comment 13-21

The commenter states that the wastewater analysis included on page 6.8-26 fails to consider future flows from projects already located within the service boundary and the conclusion that there is adequate capacity to serve the project is incorrect. However, the text referenced by the commenter refers to a project-specific (i.e., existing plus project) analysis. Analysis of cumulative wastewater flows to the PGWWTP is addressed on pages 6.11-9 through 6.11-11. Please also see Response to Comment 13-10.

Response to Comment 13-22

The third sentence in the first full paragraph on page 6.8-26 is revised as follows:

> The projected increase of 1.2 ~~7.6~~ mgd would result in increases in discharge volumes into Pleasant Grove Creek.

Response to Comment 13-23

The comment states that the Draft EIR should include a mitigation to require a service area adjustment. As identified on pages 1-5 and 2-50 of the Draft EIR, a service area boundary amendment approved by the Board and the Participants of the South Placer Wastewater Authority (SPWA) to allow wastewater from the RUSP to be treated by a SPWA regional wastewater treatment plant is a condition of project approval and, therefore, is not required as a mitigation measure as requested by the commenter.

Response to Comment 13-24

The commenter states that the statements on the first two paragraphs on page 6.11-8 that there is adequate capacity at the PGWWTP to serve the project is incorrect. However, the text referenced by the commenter refers to a project-specific (i.e., existing plus project) analysis. Analysis of cumulative wastewater flows to the PGWWTP is addressed on pages 6.11-9 through 6.11-11. Please also see Response to Comment 13-10.

Response to Comment 13-25

The comment is noted. Please see Response to Comment 13-10 for the text correction in response to this comment.

Response to Comment 13-26

The commenter states that City of Roseville Environmental Utilities Staff does not concur with the finding of a less-than-significant impact regarding the potential for cumulative wastewater flows to the PGWWTP to fail to meet treatment requirements of the Regional Quality Control Board. The commenter asserts that the finding of less-than-significant impact, which is based on the requirement that any required expansion of the PGWWTP would require acquisition and compliance with a RQCB permit, is flawed because there may be no assimilative capacity of the receiving water for discharge and therefore no ability to receive the discharge permit. However, the Draft EIR requires that all necessary permits (e.g., NPDES) are in place for the PGWWTP to discharge additional treated effluent in the amounts associated with the new development (see Draft EIR Mitigation Measure 6.11-2 c); see also Response to Comment 13-10). If the discharge permit could not be obtained, there would be no development approved that would generate wastewater flows beyond what is currently permitted.

Response to Comment 13-27

The comment requests that the Draft EIR require as mitigation “the ability to expand the PGWWTP to meet current buildout commitments and project commitments and the ability to obtain and NPDES permit for the project impacts.” The mitigation in the Draft EIR requires the same. Mitigation Measure 6.11-1(a) requires that the County secure “[c]ommitments from the wastewater treatment provider to receive anticipated flows from the Specific Plan area at the PGWWTP.” Mitigation Measure 6.11-1(c) requires that “the County shall confirm that all necessary permits (e.g., NPDES)

are in place for the PGWWTP to discharge additional treated effluent in the amounts associated with the new development." Thus, the County would verify that permits are in place and that the wastewater treatment provider has committed to service the project prior to County approval of improvement plans for wastewater collection and transmission infrastructure. No change to the Draft EIR mitigation is required.

Response to Comment 13-28

The comment is noted, and the first paragraph of page 6.11-11 is revised as follows:

> The 1996 Wastewater Master Plan EIR selected an alternative with future expansion of the PGWWTP to a capacity of 20.7 mgd to address buildout of anticipated future development within the ~~UGAs~~ approved service boundaries at the time the EIR analysis was prepared ~~and the SPWA~~. In combination with other future development, the proposed project would contribute to an increased demand on the PGWWTP to serve future development which could exceed the 20.7 mgd capacity analyzed in the 1996 Wastewater Master Plan EIR. This would be a significant cumulative impact. Because the project has the potential to contribute to the need to expand the PGWWTP to serve anticipated demand beyond the 20.7 mgd capacity already analyzed, the project's contribution would be considered cumulatively considerable, resulting in a significant impact.

Response to Comment 13-29

The first sentence in the last paragraph on page 6.14-9 is revised as follows:

> The California Department of Public Health ~~Services~~ (CDPH), State Water Resources Control Board (SWRCB), and the Department of Water Resources (DWR) would have input into the provision of water for the Plan Area.

Response to Comment 13-30

The second full paragraph on page 6.14-12 is revised as follows:

> The ~~California DHS~~ CDPH is responsible for implementing the federal Safe Drinking Water Act of 1974 and its updates, as well as California statutes and regulations related to drinking water. As part of their efforts, the ~~DHS~~ CDPH inspects and provides regulatory oversight for public water systems within California.

Response to Comment 13-31

The comment that recycled water beyond that assumed in the Draft EIR would be used for the project, if available, is noted. The fourth full paragraph on page 6.14-16 is revised as follows:

> The potable water demand did not include demand for public landscape areas that is to be met with use of recycled water. Recycled water demand was assumed to be 772 AFA and this water should be available from the Pleasant Grove Wastewater Treatment Plant (PGWWTP). The recycled water supply would be limited to the daily wastewater flow to the PGWWTP. Approximately 650 afy of this irrigation demand could be served by recycled water from the Pleasant Grove Wastewater Treatment Plant (PGWWTP). The City of Roseville has indicated that the amount of recycled water that would be generally made available to the proposed project would be based upon the average dry weather flow of wastewater from the proposed project. The City has also indicated that recycled water

> beyond the 650 afy (average dry weather flow) would be supplied to the project, if available. The water is treated for unrestricted reuse and sold by the City of Roseville. Since all recycled water would be used on public spaces, the County or some other public entity would purchase the recycled water and manage the distribution system. The peak demand for irrigation would exceed the daily supply of recycled water, resulting in a supplemental demand of 120 AFA above the recycled water supply. The supplemental irrigation water demand may be met with untreated groundwater or other supplemental water.

Response to Comment 13-32

The comment is noted, and the second paragraph under Impact 6.14-1 on page 6.14-20 is revised as follows:

> As discussed previously in the Supply and Demand Analysis above, the proposed project would result in a total demand of 3,220 AFA, but when factoring in the use of recycled water, the proposed project water demand would be 2,420 AFA. Initially, surface water could come from existing unallocated treatment capacity in the proposed Foothill/Sunset/Ophir system and a connection to an existing pipeline at Fiddyment Road and Base Line Road. As discussed previously, water through this route is limited to a peak flow rate of up to 10 MGD based on an agreement between PCWA and the City of Roseville. The pipeline would extend west along Base Line Road and then north along the proposed Watt Avenue extension to the southwest corner of the Plan Area.

Response to Comment 13-33

The statement on pages 6.14-20 and 6.14-21 that water to serve the RUSP could be supplied from groundwater at the discretion of PCWA until planned facilities are completed is consistent with County policy. Because the proposed project does not propose groundwater for supply, but would rely upon water supplied by PCWA, it is the EIR author's interpretation that the proposed project would not be inconsistent with the intent of County General Plan policies.

Response to Comment 13-34

The comment states that the Draft EIR is ignoring potential impacts on the City of Roseville's water system and its customers when it states in the second paragraph of page 6.14-23 that it would be speculative at this time to identify the level of significance of potential environmental impacts on the City of Roseville's system. However, the nature and extent of potential modifications to the City of Roseville's water system that could be required to serve the RUSP are unknown and, therefore, a meaningful environmental analysis of these potential modifications cannot be performed at this time. Moreover, as stated in the impact analysis, any options in which treated surface water would be delivered through the City of Roseville's system would be implemented via a cooperative agreement between PCWA and the City of Roseville. It is assumed that any such agreement would be contingent upon identification, analysis, and mitigation, where possible, of impacts on the City of Roseville's water system. Indeed, as stated in the analysis, the City would likely require that the project applicant evaluate the potential for impacts on the City of Roseville's system, including low pressure and water quality impacts.

Response to Comment 13-35

The commenter asks whether a complete analysis is required for the delivery route of a secondary initial surface water supply alternative identified on pages 6.14-25 and 6.14-25 of the Draft EIR. The commenter also asks what level of conceptual multi-party agreements would be required to identify

the aforementioned water supply as a secondary source and whether a conceptual agreement has been reached. The proposed project would receive water from PCWA. PCWA obtains water from a number of sources, and the identification potential PCWA water supply sources is included in the Draft EIR for purposes of information and disclosure.

Response to Comment 13-36

The commenter incorrectly assumes the 25 percent redundant groundwater water supply identified in the Draft EIR as a project-specific number and suggests a potential supply shortfall based on the 10-mgd-limit wheeling capacity of the City of Roseville water system. As stated in the Draft EIR in the first paragraph of page 6.14-34, PCWA plans to develop a backup groundwater supply within the portion of its service area that overlies the groundwater basin (generally west of State Highway 65) that would be sufficient to provide a redundant water source equal to at least 25 percent of PCWA's required water supply on a maximum daily demand basis. In other words, the figure of 25 percent refers a percentage of groundwater used for a regional water supply administered by PCWA, and not a percentage of redundant groundwater supply for the RUSP project.

Response to Comment 13-37

Mitigation measure 6.12-1 includes provision 5 that states the project is responsible for the payment of other adopted regional impact fees that would provide improvements to roadways, intersections, and/or interchanges that are affected by multiple jurisdictions. No modification of the measure is necessary if Placer County selects to require payment of the Joint Powers Authority (JPA) fee.

Response to Comment 13-38

The comment requests information on the timing of improvements along Baseline Road. The Development Agreement for the proposed project, which is available for review at the County offices, defines the timing of infrastructure improvements, including those along Baseline Road.

Response to Comment 13-39

All off-site roadway capacity expansion necessary to support the project and other future cumulative development will be governed by the requirements stated in Mitigation Measure 6.12-1.

Response to Comment 13-40

All off-site roadway capacity expansion necessary to support the project and other future cumulative development will be governed by the requirements stated in the Mitigation Measure 6.12-1.

Response to Comment 13-41

Figures 6.12-22 through 6.12-25 were included to help explain how the project's cumulative mitigation was developed as stated on Page 6.12-69. All the impact analysis for the project relied on the agreed upon cumulative networks as shown in Figures 6.12-19 through 6.12-21 and Figures 6.12-28 through 6.12-30.

Responses to "Attachment 3" (Cut Sheets)

The correction shown to Figure 6.12-27 accurately represents a change to the existing network since the NOP. The notation on page 6.12-97 is also correct that the City Council did not remove the Cirby Way widening to six lanes from the CIP. However, this notation does not change the finding in

the mitigation measure that the six-lane widening of Cirby Way cannot be assumed. Given the City's action, it would be speculative at this time to assume that Cirby Way will be widened. The Draft EIR considers this potential improvement infeasible given the City's action as well as current and past opposition to widening Cirby Way.

Response to Comment 13-42

The comment is noted, and the second and third sentences of the second paragraph on page 6.10-37 are revised as follows:

> In November 2007, ~~T~~the City of Roseville opened the Martha Riley Community Library ~~has recently broken ground on a new library facility~~ at Mahany Park, located approximately three miles from the Plan Area near Pleasant Grove Boulevard and Woodcreek Oaks Boulevard. ~~This library is scheduled to be completed in early 2007.~~

Response to Comment 13-43

The RUSP project does not include a proposal to develop as small branch library measuring 4,015 square feet of library space as the commenter states. As indicated on Draft EIR page 6.10-39, buildout population for the RUSP would generate a demand for 4,015 square feet of library space. Accordingly, the Draft EIR includes mitigation measures on page 6.10-40 requiring adequate library facilities to support the RUSP population.