U.S. Department of Energy/Placer County Biomass Utilization Pilot Project
DE-FG36-08GO88026
Phase I Report

Logistics Study of a Biomass Facility for the Lake Tahoe Region Task 3.0

Prepared for:

Placer County Biomass Program

Prepared by:

Proactive Customer Services

November 2011

TABLE OF CONTENTS

Executive Summary…….… **4**

Introduction…….…….. **6**

Task Definition…….. **7**

Subtask Definition…… **7**

Subtask 3.1 Definition…… **7**

Subtask 3.1 Summary…….……. **13**

Subtask 3.2 Definition…….…… **13**

Subtask 3.2 Summary…….…….. **14**

Subtask 3.3 Definition…….……..… **14**

Subtask 3.3 Summary…… **29**

Subtask 3.4 Definition…….…….…… **30**

Subtask 3.4 Summary…….. **33**

Subtask 3.5 Definition…….…..…… **33**

Subtask 3.5 Summary…….…..…… **34**

List of Figures

Figure 3.1.1 Lake Tahoe Basin Biomass Energy Project Core Fuel Supply Area **8**

Figure 3.1.2 Areas where material will not be moved to the proposed facility **10**

Figure 3.3.1 Major Roadways **15**

Figure 3.3.2 Biomass Material Distribution **15**

List of Tables

Table 3.1.1 2010-2114 Draft Forecast of Fuels Treatment Activities in the LTB **9**

Table 3.3.1 Annual Average Daily Traffic, total traffic with truck traffic comparison **16**

Table 3.3.2 Guidelines to select vehicles for highway types **18**

Table 3.3.3 Area Mileage Chart **21**

Table 3.3.4 Total Miles per truck type comparison **23**

Table 3.3.5 Emissions produced for transportation **25**

Table 3.3.6 Total mile driven for each location and truck type **27**

Table 3.3.7 Total emisson created for truck sizes and miles driven **28**

Table 3.4.1 Tonnage processed through the MRF **30**

Table 3.4.2 Fuel Pile Storage Calculator **31**

1.0 Executive Summary

For the County of Placer, U.S. Department of Energy (DOE) award No. DE-FG36-08GO88026 pilot project, Proactive Customer Services (PCS) has been contracted to define the logistics requirements to support a proposed Biomass Facility in the Lake Tahoe Region (LTR). Logistics is the management of the flow of goods, information and other resources, including energy and people, between the point of origin and the point of consumption. The efficient movement of biomass material from the origin to the biomass facility will be critical to the success of this project.

Biomass material is currently being produced through multiple processes at locations throughout the Lake Tahoe Region. A majority of the current material is being processed in place through pile and burn processes while some of the material is processed and transported to local and regional facilities to produce everything from soil stabilization material on slopes, to compost and mulch, to chips for energy generation. Some of the material is simply masticated in place or chipped and distributed back onto the property.

Numerous organizations and businesses are engaged in projects that generate the available biomass material. Each organization processes and moves this material in ways that best fit their business needs. Some may stack and burn while others may have the ability to chip and transport to companies that purchase their material in an attempt to offset the cost of their operation. Economics is the determining factor. Of the 92,928 acres (as identified by the US Forest Service Lake Tahoe Basin Management Unit) (LTBMU), over 25,000 acres are constrained to pile and burn due to a combination of slope and access constraints. In 2008, the Tahoe Fire and Fuels Team (TFFT) was formed to address the risk of catastrophic wildfire in the Lake Tahoe Basin. A "Summary of Biomass Utilization Potential from Forest Fuel Treatments for the Lake Tahoe Basin" draft report was prepared for the TFFT by TSS Consultants (August 2010 Draft). The TFFT in conjunction with the California Tahoe Conservancy and the Nevada Fire Safe Council, have developed a strategic plan for optimized collection of woody biomass generated as a byproduct of fuels treatment activities in the region[1]. While there is a value-added market for biomass material, the TFFT has reviewed the current barriers to successfully collecting, processing and transporting the biomass material to the value-added markets. They have defined the top barriers to move this material to the value-added markets and a list of key recommendations to address the current barriers.

[1] Summary of Biomass Utilization Potential from Forest Fuel Treatments for the Lake Tahoe Basin" draft report was prepared for the TFFT by TSS Consultants (August 2010 Draft

A centrally located biomass processing and storage facility could significantly decrease the cost and impact on the environment to transport this material as well as increase the efficiency of operations through reduced transportation miles and efficiently designed logistics models.

Four locations within the LTR are addressed in this study as potential sites for the biomass facility. Although the Kings Beach and Cabin Creek locations may be the leading choices, this study provides data and analysis for all four locations equally.

The Kings Beach site is located one block north of the Speckled Avenue/Deer Street Intersection, Kings Beach California. This 1.3 acre site is located adjacent to the NV Energy's (now Calpeco) Kings Beach Substation. The Cabin Creek location is on Placer County property at the end of Cabin Creek Road. This property houses the Eastern Regional Material Recovery Facility) and Landfill (ERL).

Two other locations considered are the Tahoe City site located on Burton Creek Drive in Tahoe City, California and a privately owned parcel adjacent to the Tahoe City Public Utilities District property in Tahoe City.

The agreed upon tasks were modified in 2011 to reflect a change from the original project site of Kings Beach, CA which was within the Lake Tahoe Basin (LTB) to the alternative site located within the Eastern Regional Landfill (now inactive and a.k.a. Cabin Creek) area just outside the LTB by the Placer County Board of Supervisors. The reason for the site location change was due to the generation of noise levels above ambient levels that could not be adequately mitigated. All of the analyses for both sites are included in this report.

2.0 Introduction

As part of the Placer County Biomass Utilization program, it is necessary to understand the material composition, source, availability, transportation and storage of biomass material needed to support the proposed biomass energy facility in the Lake Tahoe Region. The following study is divided into multiple subtasks under the Master Task 3.0 of the first phase of the Placer County U.S. Department of Energy (DOE) award No. DE-FG36-08GO88026 pilot project.

The objective of the upper level (3.0) task is to provide a study to validate the harvest, product processing strategy, transportation methodology, and onsite/offsite storage requirements of the material required to support a biomass energy facility within the LTR.

There are five lower level subtask objectives within this logistics study. Each independent subtask is designed to define the complete logistics requirement of the project. Transportation is only one piece of the logistics puzzle. Providing the right material at the right place at the right time at the right price is needed to ensure the project success.

Subtask 3.1: Validate the current harvest methods to understand the woody biomass composition. Determine if changes in the initial harvest practices can reduce additional steps required to prepare the woody biomass material for power generation.

Subtask 3.2: Define the material processing requirements (i.e. chipping/grinding) to achieve the correct material composition required to support the selected biomass facility. Document the potential emissions created by the different processing methods and processing cost associated with each.

Subtask 3.3: Document the current transportation logistics network and define opportunities to improve the transportation efficiencies to reduce potential air pollutants and GHG emissions through reduced transportation miles. Also, define the impact the winter months may have on the transportation model.

Subtask 3.4: Assess the year round onsite/offsite storage requirements for the program. Determine the minimum/maximum requirements for material needed to support the project during potential logistics or material interruptions.

Subtask 3.5: Determine the strategy to process excess product or material that cannot be used at the biomass facility. Develop an alternative solution to allow for direct processing to the existing biomass facilities or material contract.

Task 3.0, "Logistics Study"; ; was performed to validate the harvest, product processing strategy, transportation methodology, and onsite/offsite storage requirements of the material to support the proposed biomass energy facility in the LTR, specifically at the Kings Beach and Cabin Creek locations for analysis purposes. Five subtasks have been defined to achieve the objectives outlined in the master task. This task will involve research and analysis to document the current status and parameters of each subtask and look for variables and options to the current methodologies, to improve material transportation models, reduce overall program cost and positively affect how the current transportation model impacts the environment.

Subtask 3.1: Validate the current harvest methods to understand the woody biomass composition. Determine if changes in the initial harvest practices can reduce additional steps required to prepare the woody biomass material.

Biomass material will be made available through multiple sources in and around the Lake Tahoe Region. Biomass wood chips will come from new local projects and existing biomass waste piles. There are many organizations and private companies within the LTR engaged in harvest processes, fuels management, and on the ground clearing and maintenance projects that result in the production of biomass material.

A procurement plan has been completed by TSS Consultants as part of task 7.0 of the U.S. Department of Energy (DOE) award No. DE-FG36-08GO88026. This procurement plan provides a detailed analysis of woody biomass fuel resources within the Lake Tahoe Basin Biomass Energy facility (LTBBE) Core Fuel Supply Area (CFSA), *(Biomass Fuel Procurement Plan for the Lake Tahoe Basin Biomass Energy Generation Facility, TSS Sept, 2010)*.

The CFSA is outlined in Figure 3.1.1 below. The black circle highlights a 30 mile radius from a location centered between the Kings Beach and Cabin Creek facilities and includes the forested area within the Sierra Nevada Mountains and the Lake Tahoe Basin. The blue border outlines a 60 minute driving radius from the proposed site.

Figure 3.1.1 Lake Tahoe Basin Biomass Energy Project Core Fuel Supply Area (CFSA), *(Microsoft Streets and Trips, 2009)*

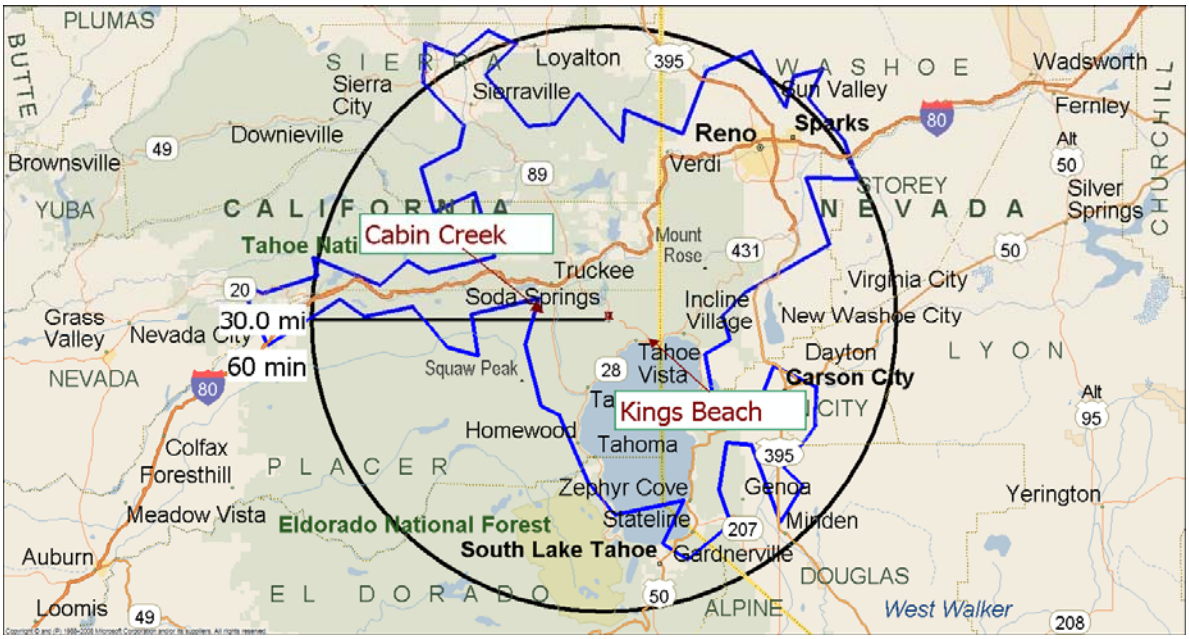

The United States Forest Service (USFS), Lake Tahoe Basin Management Unit (LTBMU) is the primary producer of biomass material within the LTR. The Biomass Fuel Procurement Plan for the Lake Tahoe Basin Biomass Energy Generation Facility, (TSS September, 2010) includes a five-year forecast of fuels treatment activities planned within the LTB. The draft annual forecast of 28,863 Bone Dry Ton (BDT) is illustrated in Table 3.1.1 below. Of that, the USFS-LTBMU will produce approximately 12,250 BDT per year (42%).

Table 3.1.1 below shows the acres to be treated using the different processing methods and the biomass tonnage to be available from the fuels treatment options.

Table 3.1.1 2010-2114 Draft (Annual) Forecast of Fuels Treatment Activities in the LTB[2]

FIRE DISTRICT/AGENCY/ ORGANIZATION	TOTAL ACRES TREATED	BROADCAST BURN (ACRES)	HAND THIN, PILE AND BURN (ACRES)	HAND THIN AND CHIPPED (ACRES)	MECHANICAL REMOVAL (CTL AND MASTICATION) (ACRES)	BIOMASS TONNAGE FROM MECHANICAL REMOVAL AND HAND THIN/ CHIPPED (BONE DRY TONS)
California State Parks	150	30	10	30	80	800
North Lake Tahoe FPD	361	100	241		20	1850
USFS – LTBMU	4400	450	2950		1000	12250
North Tahoe FPD	520		300	200	20	3080
CA Tahoe Conservancy	100		40	60		450
City of South Lake Tahoe FD	139		53		86	1195
Fallen Leaf Lake FD	58		29		29	
Tahoe Douglas FPD	182		132		50	2500
Meeks Bay FPD	225			210	15	1571
Lake Valley FPD	319		34	165	120	3567
Nevada Division of Lands	240		140		100	1000
Placer County Biomass Program	50			50		600
TOTALS	**6744**	**580**	**3929**	**715**	**1520**	**28863**
PERCENT OF TOTAL		**9%**	**58%**	**11%**	**22%**	

Note that the quantity in Table 3.1.1 is for the entire Lake Tahoe Basin while this study will only consider material made available from areas ranging from the Tahoe – Douglas Fire Protection District (FPD) to the Meeks Bay FPD Figure 3.1.1. The boundaries are defined due to traffic considerations to minimize traffic movement through the heavily congested southern part of the Lake Tahoe basin. Although the percentages from the different sources of the material will stand true, the total material availability will be reduced by approximately 5,000 BDT/year due to material not being transported from the Fallen Leaf FPD, Lake Valley FPD or the South Lake Tahoe Fire District areas. These three areas are shown in yellow in Figure 3.1.2 below.

[2] Lake Tahoe Biomass Utilization Strategy, draft report (2010)

Figure 3.1.2 Areas where material will not be moved to the proposed facility

(Microsoft Streets and Trips, 2009)

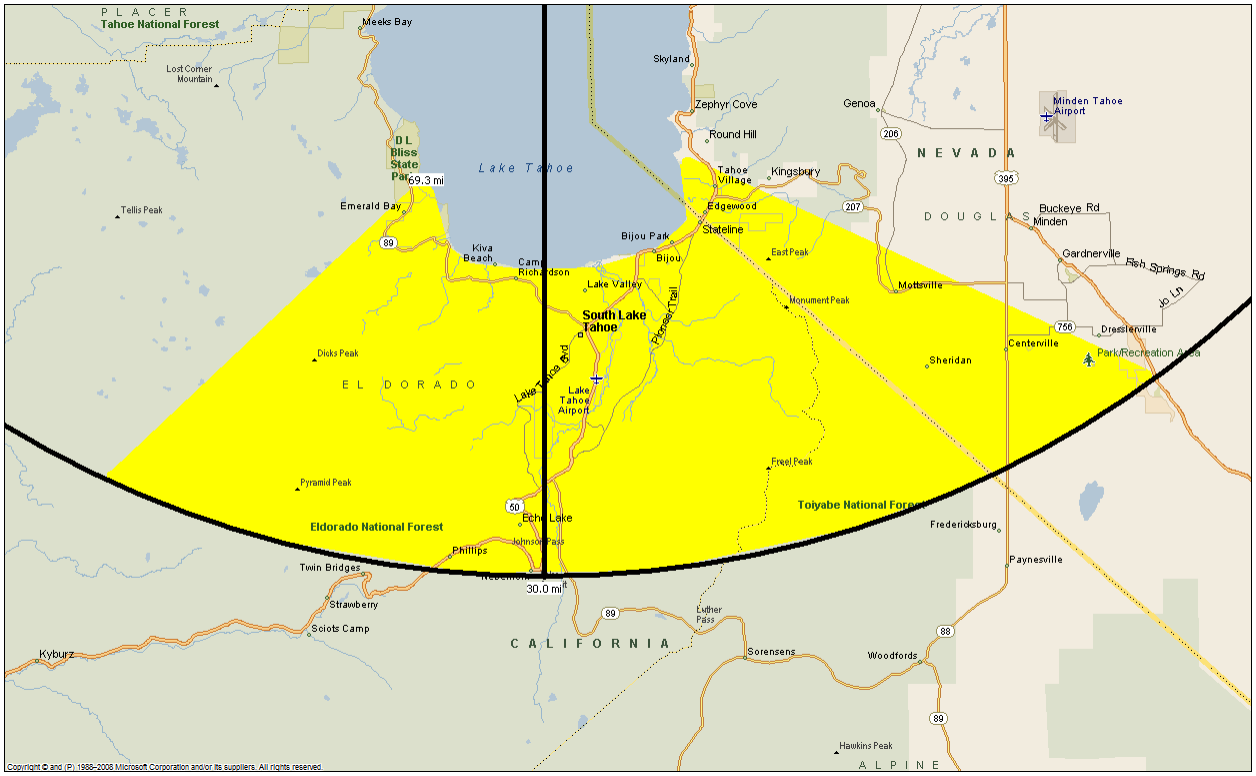

The December 2004 "Community Wildfire Protection Plan (CWPP) For The California Portion Of The Lake Tahoe Basin" Section 5, Thinning, states that whenever possible, use mechanical or hand thinning processes to achieve fuel hazard reduction and healthy forest objectives. Treat slash by whole tree yarding or disposing of slash in stands by hand piling and burning or chipping and scattering. This study will focus on material made available for chipping or other processing methods that result in material usable by the proposed biomass facility.

Slash created by projects in the Tahoe area that is not removed for consumption by existing biomass processing facilities in the region or commercial use (i.e. compost, mulch for soil stabilization) is being processed using the pile and burn method. Open pile burning produces significant levels of air pollution including NOx, PM, VOC and air toxics. If not carefully managed, the smoke can be a nuisance to residents and businesses, and can adversely impact community health. Smoke can contribute levels of pollution that exceed health protective air quality standards as set by the U.S. EPA and States agencies.

Processes that produce woody biomass in the Lake Tahoe region include Defense Zones, Meadow Restoration, and Roadside or Urban Lots clearance projects. *(*"2004 "Community Wildfire Protection Plan (CWPP) For The California Portion Of The Lake Tahoe Basin"*)*. Clearance, restoration and harvest methods used in the Lake Tahoe basin that produce woody biomass may be the result of defensible space clearance projects, restoration projects or defense zone projects. Defensible space and roadside projects may produce small amounts of green waste materials generally treated on site through hand thinning and chipping or mastication processes where the material is left in place for erosion control. Defense Zone or Restoration projects may require mechanical thinning processes or Whole Tree (WT) and Cut to Length (CTL) processes. Whole tree is the practice of falling trees and hauling the entire tree to a landing where it is processed accordingly. The slash is piled and burned or is hauled away or ground on site and the resulting chips are hauled to a disposal facility. In the CTL system, one fells timber and using a forwarder, processes logs in the forest and removes the timber. The residual slash is piled and burned or is ground in the woods (chipper/forwarder), removed out of woods using a loader, or a slash forwarder and then ground at a landing site *(*2004 "Community Wildfire Protection Plan (CWPP) For The California Portion Of The Lake Tahoe Basin"*).*

Slash can also be bundled in rows, and hauled away to be chipped off site. Newly produced chippers and grinders can produce multiple levels of chip sizes. Importance must be paid to material size, moisture content, species composition, and cleanliness of chips. Changes in equipment have begun creating new opportunities. Chipper forwarders and bundling machines and -0% grinder/chippers have revolutionized biomass initial harvest methods.

The objective of this project is to process and dispose of slash through biomass utilization processes. In 2009, multiple projects were managed by the Placer County Biomass Office to remove existing slash produced from USFS fuel reduction and forest projects in the Lake Tahoe basin. A joint report from Placer County and the LTBMU will be coming out in 2011. Material from these projects was processed and moved to existing Biomass Energy plants in the region. Material was processed from sites ranging from large multi-acre sites to small road side material consolidation sites. The material composition ranged from piles of six to eight inch logs, to large pre-chipped piles of material.

Biomass material is produced in a variety of ways within the region. Large production processes use medium or large commercial chippers and small consumer size models may be used for small defensible space projects. Recent USFS clearing projects have been completed using large commercial chippers that can produce a variety of woody chip sizes suitable for energy production. These woody chips are consistent with the material currently being used by two regional commercial energy producing facilities. These regional facilities are rated to produce

from 15 MW (Loyalton) to 25 MW (Quincy) of energy and consume up to 220,000 BDT per year. At the time of this report the Loyalton facility has been shutdown[3]. The one to three megawatt power plant recommended for the LTR facility will consume similar composition material at up to an estimated 10,000 BDT per year per Megawatt produced or around 20,000 BDT per year for the proposed LTR facility.

Subtask 3.1 Summary;

The Lake Tahoe Basin is forecasted to produce up to 28,863 BDT of biomass material annually from 2010 through 2014. While this study uses the current fire year forecast, the TSS study looks at a much larger sustainability cycle. Based on the defined logistics and practical accessibility to the material, the requirement for a maximum of 20,000 BDT[4] to fuel the proposed LTR facility will be available for processing, storage and usage from the defined Core Fuel Supply Area. This material is a result of harvest processes, fuels management, and on the ground clearing and maintenance projects. To significantly reduce the open burning process, this material will be processed by local contractors and private companies into the desired product through multiple means and transported to the proposed biomass processing facility. This material will only be made available for a logistics network if a cost sharing process to defer the cost is made available to each organization. A proposed cost sharing approach by Placer County with each agency would allow this to occur.

Subtask 3.2: Define the material processing requirements (i.e. chipping/grinding) to achieve the correct material composition required to support the selected facility. Document the potential emissions created by the different processing methods and processing cost associated with each.

Defined processes are needed to produce the material required to support the selected technology. The feedstock requirements, particularly the size of the woody chip, for the proposed facility may define the equipment used to process the woody biomass material. Chippers process biomass through a slicing action into pieces of some controlled dimension while grinders reduce woody biomass with a tearing or shredding action that may produce a more coarse material with a wider range in piece sizes. A specific chip size may be required for some energy production uses where material handling or power plant processes impose constraints on the feedstock.

Chip size, moisture content, cleanliness of fuel, and fuel type are all considerations when pairing processing equipment with energy generating facility types. However, the difference in

[3] Based on a Press Release from Sierra Pacific Industries, 8/20/2010.

[4] Based on a projected low of 14,000 BDT per year for Gasification technology, and a projected high of 20,000 BDT per year for Direct Combustion technology for a 2MW facility, TSS Consultants.

emissions by different, on the ground, processing methods is slight. What's important is that with smaller applications one may be using smaller trucks for hauling. This may increase the processing costs, but not necessarily increase emissions outputs. With WT versus CTL systems, emissions may slightly increase due to a larger number of specialized machines on each project.

The Small-Scale Biomass Power unit selected for the LTR facility will be targeted to require material three (3) inches or less in diameter. The moisture content must be between 40% and 45% and contain less than 5% ash content to achieve a heating value at least, or greater than, 8,000 btu per dry pound of material. TSS Consultants has created the fuel specifications for each of the two primary fuel types targeted for the project in "Appendix C" of the "Biomass Fuel Procurement Plan for The Lake Tahoe Basin Biomass Energy Generation Facility" document. That document defines the fuel description, maximum moisture content, maximum size, minimum size, and excluded material.

Chippers and grinders used in the region are able to achieve the required material size required to support the LTBBE process. The chippers used are capable of being fitted with multiple drums and can product chips from one to four inches in diameter.

Subtask 3.2 Summary;

Multiple processes and equipment types will be used to process the biomass material into the desired consistency needed to support the proposed facility. A fuels specification has been developed to define the specific characteristic of the material. This specification will define the material composition requirements to support the fuel type targeted for the LTR facility.

Subtask 3.3: Document the current transportation logistics network and define opportunities to improve the transportation efficiencies to reduce potential air pollutants and GHG emissions through reduced transportation miles. Also, define the impact the winter months may have on the transportation model.

The scope of this project will focus on the Lake Tahoe areas to the north of the communities of Zephyr Cove and Meeks Bay (inclusive). These boundaries are set to minimize traffic movement through the heavily congested southern part of the Lake Tahoe area and the Emerald Bay area. The areas south of Zephyr Cover and Meeks Bay are heavily filled with local recreation and small business facilities as well as the Lake Tahoe Nevada Casino gaming operations. Although material availability will cover a 30 mile radius from the LTR facility (at the Kings Beach site for analytical purposes) from Zephyr Cove to Meeks Bay boundaries, material transportation from the southern portion will be eliminated due to traffic restrictions and congested traffic lanes.

The five major California roadways to be considered for transportation corridors for the boundaries for this study are Interstate 80 from Highway 89 to Highway 267, Highway 89, from Interstate 80 to Highway 28 (Tahoe City). Highway 28 from Meeks Bay to Highway 267 (Kings Beach), Highway 28 from Highway 267 (Kings Beach) to Zephyr Cove via Highway 50.

Figure 3.3.1 Major Roadways *(Microsoft Streets and Trips, 2009)*

Each of these transportation routes provide access to, from, and within the northern portion of the Lake Tahoe Basin, and would be used to access the proposed LTR facility. Each of the routes accommodates standard automobile traffic as well as vehicles as large as a five axle truck.

The following Table 3.3.1 shows the 2008 traffic usage for each of these roads. (www.dot.ca.gov/hq/traffops). The use of Highway 28 from Tahoe City to Kings beach woud be avoided whenever possible. Highway 89 to Highway 267 would be the preferred route.

Table 3.3.1, 2008 Caltrans, Annual Average Daily Traffic (AADT), total traffic with truck traffic comparison

Route	Postmile	AADT Total	Total Trucks	Total Truck %	2 Axle Volume	3 Axle Volume	4 Axle Volume	5 Axle Volume	Description
28	0.1	16,000	578	4	359	104	66	49	TAHOE CITY, JCT. RTE. 89
28	4.3	9,100	329	4	2,046	591	381	28	LARDIN WAY
28	9.3	15,800	570	4	355	102	65	48	KINGS BEACH, JCT, RTE. 267 NORTH
28	9.3	17,800	643	4	400	115	74	54	KINGS BEACH, JCT, RTE. 267 NORTH
28	11.0	14,500	524	4	326	94	60	44	CAL-NEVA DRIVE
89	5.0	4,500	571	14	132	187	99	154	HOBART MILLS ROAD
89	5.8	6,900	276	4	98	90	68	20	WARD CREEK BRIDGE
89	8.6	12,700	799	6	565	117	49	68	TAHOE CITY, JCT. RTE. 28 EAST
89	8.6	12,700	939	7	664	137	57	80	TAHOE CITY, JCT. RTE. 28 EAST
89	13.7	10,200	754	7	5,337	1,101	46	64	SQUAW VALLEY ROAD
267	10	9,900	317	3	143	72	26	77	JCT. RTE. 28

The following map (Figure 3.3.3) shows the distribution of woody biomass material based on the 2010-2014 Draft Forecast of Fuels Treatment Activities in the LTB *(TSS-Biomass Fuel Procurement Plan for the Lake Tahoe Basin Biomass Energy Generation Facility).* The quantity listed for each Fire Protection District areas includes material within the specific district as well as material from the LTBMU, California State Parks, California Tahoe Conservancy and the Placer County Biomass program within that Fire Protection District. Due to economics, most of the material does not currently contribute to the biomass to energy process, but is typically piled and open burned or masticated back onto the ground.

Figure 3.3.2 Map Legends:

MB FPD	Meeks Bay Fire Protection District
NDoF	Nevada Division of Forestry
NLT FPD	North Lake Tahoe Fire Protection District
NT FPD	North Tahoe Fire Protection District
TD FPD	Tahoe-Douglas Fire Protection District
CSP	California State Parks
NSP	Nevada State Parks
CTC	California-Tahoe Conservancy
LTBMU	Lake Tahoe Business Management Unit
PCB	Placer County Biomass

Figure 3.3.2 Biomass Material Distribution *(Microsoft Streets and Trips, 2009)*

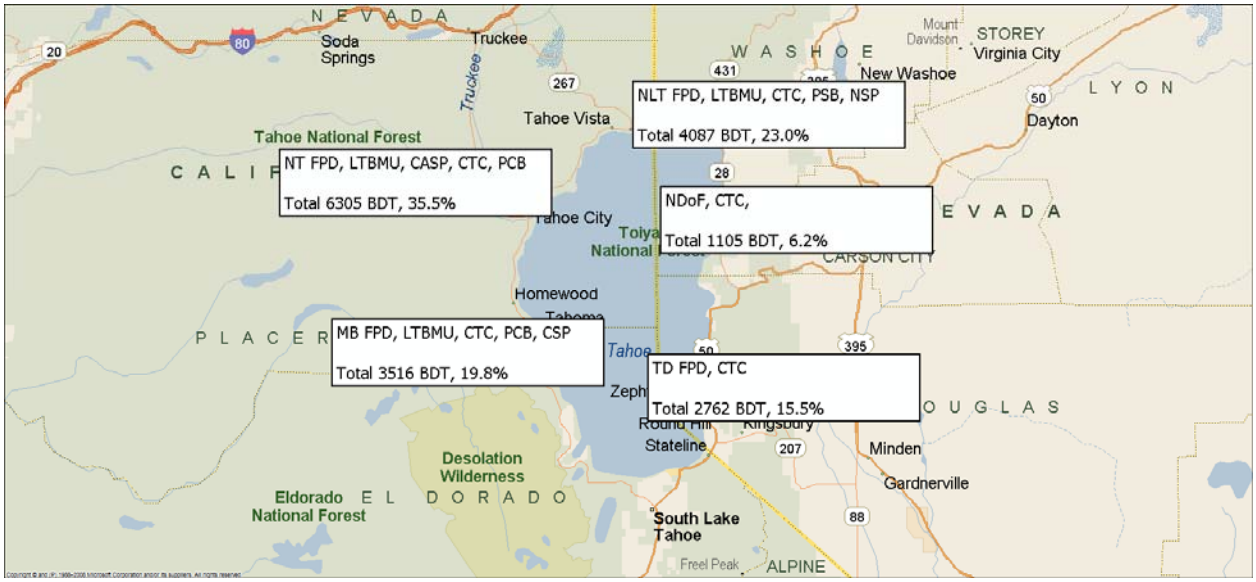

In addition to material produced through defensible space projects, between 2005 and 2009, an average of 14,000 BDT tons of material was processed through the Eastern Regional Material Recovery Facility [5](Tahoe, Truckee, Sierra Disposal) at Cabin Creek and sold for energy production and erosion control.

Defining a functional logistics model is one of the key factors in the success of this program. As stated above, today, material is generated throughout the area, processed in various ways, and either left in place or moved to central processing locations where it is sold to existing biomass processing facilities in the region or for commercial use (i.e. compost, mulch or soil stabilization). The majority of material being moved to central locations today will need to be processed into the usable composition required by the selected energy production technology. The facility will require material three (3) inches or less in diameter, moisture content between 40% and 45%, contain less than 5% ash content to achieve at least 8,000 BTU per dry pound of material[6].

The proposed LTR facility will require on average of up to 10,000 BDT of woody biomass annually to support the production of 1MW of electricity. While the task was to investigate a 1MW to 3MW facility, the further analysis will assume a 2MW facility for tabular purposes. The actual biomass material volume required will be dependent on the chosen technology for fuel-to-energy production (i.e., gasification and steam turbine technologies). Gasification processes may use between 14,000 BDT and 17,000 BDT and Steam Turbine processes may use from 15,000 BDT to 20,000 BDT to support a 2MW facility. Using the current processing and

[5] Data from Eastern Regional Sanitary Landfill
[6] TSS Consultants

transportation methods, this would require approximately seven "Chip Van" deliveries per day, based on 12.5 BDT[7] per trip based on projected operations of 330 days per year and deliveries between 235 days and 330 days per year. For purposes of this discussion, a "Chip Van" is described as a WB50 in Table 3.3.2 below.

Additional transportation processes need to be reviewed. These include truck type and size, miles driven, traffic patterns, roadway restrictions and pollution created by the mix of machine type and miles driven. Facility layout, product storage layout and access will also need to be reviewed. The proposed facility layout will support the physical size of the chip van but will not allow for the dumping requirements of this model. Common vehicle types include tractor-trailer (AASHTO WB-50) combo units, smaller single unit (AASHTO SU-20) with "walking floor" technology, or single unit dump truck style trucks.

The following examples in Table 3.3.2 are all capable of providing the transportation requirements. As previously mentioned, the facility is capable of accepting all of the examples below. The limitations may be caused by access to the facility or height restriction within the dumping area.

Table 3.3.2 General guidelines to assist in the selection of the appropriate designed vehicles for various highway types.

Highway Type	Design Vehicle
Rural Highways	
Interstate/freeway ramp terminals	WB-50
Primary arterials	WB-50
Minor arterials	WB-50 OR WB-40
Collectors	SU-30
Local Streets	SU-30
Urban Streets	
Freeway ramp terminals	WB-50
Primary arterials	WB-50 or WB-40
Minor arterials	WB-40 or B-40
Collectors	B-40 or SU-30
Residential/local streets	SU-30 or P

[7] Woody Biomass Definitions and Conversion Factors, J.R Shelly, UC Berkley

Source: *Intersection Channelization Design Guide,* NCHRP Report 279, 1985. Note: WB50 =semitrailer combination, large; WB40 =semitrailer, intermediate; SU30 =single unit truck; B40=single unit bus; P=passenger car.

For a proposed Kings Beach site, local TRPA regulations may limit the roof height of the material storage area to 28’9” (TRPA Code of Ordinances, Chapter 22 – Height Standards). This limitation may eliminate the use of some dump type trucks. The final facility layout and configuration will need to be considered when determining which transportation vehicle can be used. There are no restrictions on roof height of material storage at the Cabin Creek location.

The following pictures are illustrations of the vehicle types in Table 3.3.2

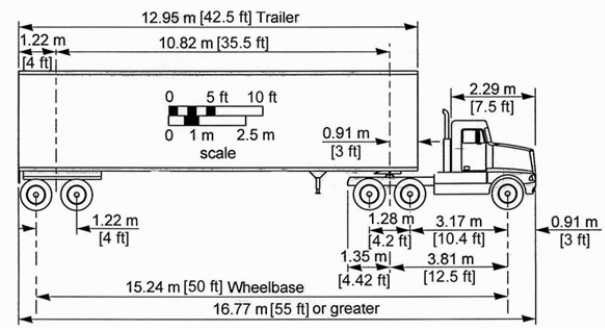

WB50 =semitrailer combination

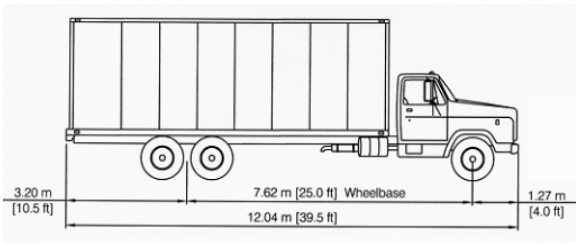

WB40 =semitrailer, intermediate

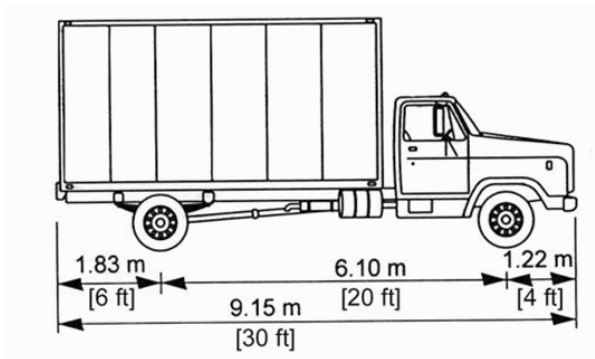

SU30 – Single Unit Truck

Examples of “Chip Van”, “Drop Box” and “Dump” style trucks

The following is an assessment of three key considerations. Miles driven, traffic restrictions, and pollution created/offset.

For this study, four individual locations are considered as a possible site for the LTR facility and supporting biomass material processing or central storage locations.

The four locations are;

- Kings Beach, located in Kings Beach near Highway 267 and Speckled Street
- Cabin Creek, the current site of the Eastern Regional Materials Recovery (Tahoe, Truckee, Sierra Disposal)
- Burton Creek, is a location near the planned Placer County Justice Center
- Williamson Property, located in Tahoe City near the Public Utility District facility

The following mileage chart documents the distance between the primary biomass material locations in the Lake Tahoe Region and the mileage to the four locations being considered. Although the biomass material is not being transported from the South Lake Tahoe FD, the Fallen Leaf FPT, and the Lake Valley FPD, the mileage data from these locations are included in Table 3.3.3 for reference.

Table 3.3.3 Area Mileage Chart *(Microsoft Streets and Trips, 2009)*

	Cabin Creek	North Tahoe FPD	Burton Creek	Kings Beach	Meeks Bay FPD	North Lake Tahoe FPD	Nevada Div of Forestry	South Lake Tahoe FD	Fallen Leaf FPD	Lake Valley FPD	Tahoe Douglas FPD
Cabin Creek	0	12.8	12.9	18.3	22.9	24.1	31	39.4	41.1	41.1	43.6
Kings Beach	18.3	8.7	8.6	0	21	6.1	13.1	35.6	39.2	41	25.8
Burton Creek	12.9	0.1	0	8.6	25.9	13.6	20.6	28.8	30.8	33.6	33.2
Tahoe PUD	11.1	1.9	1.7	10.4	24.8	5.4	22.4	30.6	29	31.8	35.1

The second consideration is the truck size used for the delivery to the facility. Assuming the Cabin Creek facility as the selected biomass facility location and all material is transported using a standard Chip Van, the following chart represents the total miles driven to the four possible facility sites from the point of origin of the biomass material. All calculations are based on the annual requirement of up to 20,000 BDT and a direct route from the point of origin to the facility, based on mileage calculated using "Microsoft Streets and Trips, 2009" software. The total miles data is calculated as (20,000 BDT * % contribution / Volume BDT * Miles Driven)

Table 3.3.4 below calculates the total miles driven to deliver 20,000 BDT of biomass material to the four potential facility sites. The assumptions used in the calculations are consistent for each location to determine the total miles driven for each option. These include the use of the four different capacity[8] vehicles. The vehicles considered are a chip van (12.5 BDT), an SU-20 (5.4 BDT), a 30 cu yard dump (4 BDT) and a 20 cu yard dump (2.7 BDT). The following chart demonstrates the differences in the total number of round trips required, based on the load capacity of the vehicle. As noted below, the round trip count may vary from 1,600 for a chip van to 7,407 for a 20 cubic yard dump. Based on deliveries from 235/day per year to 330/days per year, the total daily deliveries could range from seven to 32 per day.

The Fuels Procurement Manager (FPM) roles and responsibilities are outlined in the Biomass Fuel Procurement Plan, (TSS 2010). Within the job requirements, the FPM will be required to manage biomass material movement, storage, and delivery strategies to meet the needs of the facility once it is built.

Scenarios/requirements to consider are:

- If the Cabin Creek was chosen, define the extra transportation of delivering all materials to Cabin Creek throughout the summer months and then minus the trips to Kings Beach during the winter.
- If Kings Beach were chosen, define the quantity of biomass material to be delivered straight to Kings Beach versus how much will go to Cabin Creek throughout the summer months for storage for the winter months consumption.
- Determine the most efficient transportation routes for each truck size.
- Define and schedule the daily Kings Beach facility biomass material requirements (due to offsite storage requirements).
- Define the origin and composition (chipped or unchipped) of the material to determine how it should be transported and the destination.

[8] Capacity based on 1 BDT= 200 Cubic Feet. Woody Biomass Definitions and Conversion Factors, J.R Shelly, UC Berkley

Table 3.3.4 Total miles per truck type comparison. Defines the total round trip miles driven for each truck type option. The actual miles driven will be influenced by the processing facilities ability to accept different truck size, access and dumping capabilities.

Kings Beach										
Material Origin	**% Contribution**	**Miles**	**Chip Van (12.5 BDT)**		**40 CY Vehicle (5.4 BDT)**		**30 CY Vehicle (4 BDT)**		**20 CY Vehicle (2.7 BDT)**	
			Round Trip	Miles	Round Trip	Miles	Round Trip	Miles	Round Trip	Miles
North Tahoe FPD	35.5%	17.4	568	9,883	1,315	22,878	1,775	30,885	2,630	45,756
North Lake Tahoe FPD	23.0%	12.2	368	4,490	852	10,393	1,150	14,030	1,704	20,785
Meeks Bay FPD	19.8%	42.0	317	13,306	733	30,800	990	41,580	1,467	61,600
Tahoe Douglas FPD	15.5%	51.6	248	12,797	574	29,622	775	39,990	1,148	59,244
Nevada DoF	6.2%	26.2	99	2,599	230	6,016	310	8,122	459	12,033
	100%		**1,600**	**43,074**	**3,704**	**99,709**	**5,000**	**134,607**	**7,407**	**199,418**

Tahoe City										
Material Origin	**% Contribution**	**Miles**	**Chip Van (12.5 BDT)**		**40 CY Vehicle (5.4 BDT)**		**30 CY Vehicle (4 BDT)**		**20 CY Vehicle (2.7 BDT)**	
			Round Trip	Miles	Round Trip	Miles	Round Trip	Miles	Round Trip	Miles
North Tahoe FPD	35.5%	3.8	568	2,158	1,315	4,996	1,775	6,745	2,630	9,993
North Lake Tahoe FPD	23.0%	10.8	368	3,974	852	9,200	1,150	12,420	1,704	18,400
Meeks Bay FPD	19.8%	49.6	317	15,713	733	36,373	990	49,104	1,467	72,747
Tahoe Douglas FPD	15.5%	70.2	248	17,410	574	40,300	775	54,405	1,148	80,600
Nevada DoF	6.2%	44.8	99	4,444	230	10,287	310	13,888	459	20,575
	100%		**1,600**	**43,700**	**3,704**	**101,157**	**5,000**	**136,562**	**7,407**	**202,314**

Burton Creek										
Material Origin	**% Contribution**	**Miles**	**Chip Van (12.5 BDT)**		**40 CY Vehicle (5.4 BDT)**		**30 CY Vehicle (4 BDT)**		**20 CY Vehicle (2.7 BDT)**	
			Round Trip	Miles	Round Trip	Miles	Round Trip	Miles	Round Trip	Miles
North Tahoe FPD	35.5%	0.2	568	114	1,315	263	1,775	355	2,630	526
North Lake Tahoe FPD	23.0%	27.2	368	10,010	852	23,170	1,150	31,280	1,704	46,341
Meeks Bay FPD	19.8%	51.8	317	16,410	733	37,987	990	51,282	1,467	75,973
Tahoe Douglas FPD	15.5%	66.4	248	16,467	574	38,119	775	51,460	1,148	76,237
Nevada DoF	6.2%	41.2	99	4,087	230	9,461	310	12,772	459	18,921
	100%		**1,600**	**47,088**	**3,704**	**108,999**	**5,000**	**147,149**	**7,407**	**217,999**

Cabin Creek										
Material Origin	**% Contribution**	**Miles**	**Chip Van (12.5 BDT)**		**40 CY Vehicle (5.4 BDT)**		**30 CY Vehicle (4 BDT)**		**20 CY Vehicle (2.7 BDT)**	
			Round Trip	Miles	Round Trip	Miles	Round Trip	Miles	Round Trip	Miles
North Tahoe FPD	35.5%	25.6	568	14,541	1,315	33,659	1,775	45,440	2,630	67,319
North Lake Tahoe FPD	23.0%	48.2	368	17,738	852	41,059	1,150	55,430	1,704	82,119
Meeks Bay FPD	19.8%	45.8	317	14,509	733	33,587	990	45,342	1,467	67,173
Tahoe Douglas FPD	15.5%	87.2	248	21,626	574	50,059	775	67,580	1,148	100,119
Nevada DoF	6.2%	62.0	99	6,150	230	14,237	310	19,220	459	28,474
	100%		**1,600**	**74,564**	**3,704**	**172,601**	**5,000**	**233,012**	**7,407**	**345,203**

Using data from the chart above, with the help of Placer County Air Pollution Control District (APCD), we have calculated the emissions created for the transportation of the biomass for this project. The calculations are based on the documented California Air Resources Board factors for emissions for a Diesel Heavy Duty Vehicle for the Chip Van, and Air Quality factors for a Diesel Medium Duty Vehicle for the remaining vehicles.

The following chart defines the total emissions for PM10, NOx, CO, NMHC, CH_4, and CO_2 for the transportation miles. The chart also defines the emissions associated with the least desirable option of open burning and the alternative options of transporting material through a central facility and on to an energy production site, or direct to an existing biomass facility in the region (e.g., Loyalton or …). The total transportation miles are based on the total mileage for all round trips to and from the location. The emission standard is based on pounds per BDT for open burning and grams/mile driven for the transportation options. All of the "Emissions Produced" calculations convert the result to pounds produced.

Table 3.3.5 Emissions produced for the transportation of 20,000 BDT per year calculated to each of the possible processing facilities. The emissions calculation are shown for each of the possible vehicle types. Also shows the emissions produced if all of the material was processed using the "Pile and Burn" option or the process of moving the material to Cabin Creek and on to the Loyalton processing facility. This demonstrates the best and worst case scenario from the emissions perspective.

Location	Process	Vehicle Type	Miles Driven	Emissions Factors	PM10	CO	NMOC	CH4	Nox	CO2
On Site	Open Burn		0	Emission Factors (lb per BDT)	13	125	10	6	6	3,667
				Pounds Produced	260,000	2,500,000	200,000	120,000	120,000	73,340,000
Loyalton via Cabin Creek	Transport			Chip Van Emission Factors (g/mile)	0.40	40	0.50	1	17	2,222
		Chip Van	173,059	Emissions Produced (pounds)	153	15,261	191	382	6,486	847,760
Kings Beach	Transport			Chip Van Emission Factors (g/mile)	0.40	40	0.50	1	17	2,222
				Medium Duty Vehicle Emission Factors (g/mile)	0.15	11	0.10	0.5	11	2,000
		Chip Van	43,074	Emissions Produced (pounds)	38	3,799	47	95	1,614	211,007
		SU-20	99,709	Emissions Produced (pounds)	33	2,418	22	110	2,506	439,642
		30 yd dump	134,607	Emissions Produced (pounds)	45	3,264	30	148	3,383	593,516
		20 yd dump	199,418	Emissions Produced (pounds)	66	4,836	44	220	5,012	879,284
Tahoe City (PUD)	Transport			Chip Van Emission Factors (g/mile)	0.40	40	0.50	1	17	2,222
				Medium Duty Vehicle Emission Factors (g/mile)	0.15	11	0.10	0.5	11	2,000
		Chip Van	43,700	Emissions Produced (pounds)	39	3,854	48	96	1,638	214,072
		SU-20	101,157	Emissions Produced (pounds)	33	2,453	22	112	2,542	446,026
		30 yd dump	136,562	Emissions Produced (pounds)	45	3,312	30	151	3,432	602,136
		20 yd dump	202,314	Emissions Produced (pounds)	67	4,906	45	223	5,085	892,053
Burton Creek	Transport			Chip Van Emission Factors (g/mile)	0.40	40	0.50	1.00	17	2,222
				Medium Duty Vehicle Emission Factors (g/mile)	0.15	11	0.10	0.50	11	2,000
		Chip Van	47,088	Emissions Produced (pounds)	42	4,152	52	104	1,765	230,669
		SU-20	108,999	Emissions Produced (pounds)	36	2,643	24	120	2,739	480,604
		30 yd dump	147,149	Emissions Produced (pounds)	49	3,568	32	162	3,698	648,817
		20 yd dump	217,999	Emissions Produced (pounds)	72	5,287	48	240	5,479	961,212
Cabin Creek	Transport			Chip Van Emission Factors (g/mile)	0.40	40	0.50	1	17	2,222
				Medium Duty Vehicle Emission Factors (g/mile)	0.15	11	0.10	0.50	11	2,000
		Chip Van	74,564	Emissions Produced (pounds)	66	6,575	82	164	2,795	365,265
		SU-20	172,601	Emissions Produced (pounds)	57	4,186	38	190	4,338	761,041
		30 yd dump	233,012	Emissions Produced (pounds)	77	5,651	51	257	5,856	1,027,408
		20 yd dump	345,203	Emissions Produced (pounds)	114	8,371	76	381	8,676	1,522,086

Table 3.3.6 below, represents the total miles driven for the different truck types and capacities using calculations considering the two most likely scenarios of Kings Beach and Cabin Creek.

Assumptions must be made at this time to forecast the total transportation miles. For this study, the following assumptions are used to calculate the "Miles" for Table 3.3.6. If Cabin Creek is chosen, all material will be transported to, and consumed at Cabin Creek. If the Kings Beach site is chosen, a defined percentage of the material will go direct to Kings Beach and the remainder will go to Cabin Creek for storage to support the winter month's demand. This quantity will then be transported to Kings Beach for consumption throughout the winter months.

Kings Beach assumptions:

- All of the biomass material processed from the areas defined as Meeks Bay to Tahoe City would be transported to Cabin Creek for storage and or processing.
- All of the biomass material processed from the areas defined as Dollar Point to Stateline would be transported to Kings Beach for immediate consumption.
- Fifty percent of the biomass material from the areas defined as Stateline to Zephyr Cove would go to Kings Beach for immediate use, and the remaining fifty percent will be transported to Cabin Creek for storage and or processing.

Cabin Creek assumptions:

- All material processed from all material sources will be transported to Cabin Creek for consumption at that location.

Table 3.3.6, Total mile driven for each location and truck type

Kings Beach										
Material Origin	**% Contribution**	**Miles**	**Chip Van (12.5 BDT)**		**40 CY Dump-20 (5.4 BDT)**		**30 CY Dump (4 BDT)**		**20 yrd Dump (2.7 BDT)**	
			Round Trip	Miles	Round Trip	Miles	Round Trip	Miles	Round Trip	Miles
North Tahoe FPD	35.5%	79.4	568	45,099	1,315	104,396	1,775	140,935	2,630	208,793
North Lake Tahoe FPD	23.0%	12.2	368	4,490	852	10,393	1,150	14,030	1,704	20,785
Meeks Bay FPD	19.8%	82.4	317	26,104	733	60,427	990	81,576	1,467	120,853
Tahoe Douglas FPD	15.5%	87.7	248	21,750	574	50,346	775	67,968	1,148	100,693
Nevada DoF	6.2%	62.4	99	6,190	230	14,329	310	19,344	459	28,658
	100%		**1,600**	**103,633**	**3,704**	**239,891**	**5,000**	**323,853**	**7,407**	**479,781**

Cabin Creek										
Material Origin	**%**	**Miles**	**Chip Van (12.5 BDT)**		**40 CY Dump-20 (5.4 BDT)**		**30 CY Dump (4 BDT)**		**20 yrd Dump (2.7 BDT)**	
			Round Trip	Miles	Round Trip	Miles	Round Trip	Miles	Round Trip	Miles
North Tahoe FPD	35.5%	25.6	568	14,541	1,315	33,659	1,775	45,440	2,630	67,319
North Lake Tahoe FPD	23.0%	48.2	368	17,738	852	41,059	1,150	55,430	1,704	82,119
Meeks Bay FPD	19.8%	45.8	317	14,509	733	33,587	990	45,342	1,467	67,173
Tahoe Douglas FPD	15.5%	87.2	248	21,626	574	50,059	775	67,580	1,148	100,119
Nevada DoF	6.2%	62.0	99	6,150	230	14,237	310	19,220	459	28,474
	100%		**1,600**	**74,564**	**3,704**	**172,601**	**5,000**	**233,012**	**7,407**	**345,203**

Table 3.3.7, calculates the total emisson created for the multipe truck sizes and miles driven using the miles calculated in Table 3.3.6 above. The chart also contains the emissions calculations for open burning and the transportation to Loyalton option.

Emissions Calculations - Kings Beach										
Location	Process	Vehicle Type	Miles Driven	Emissions Factors	PM10	CO	NMOC	CH4	Nox	CO2
On Site	Open Burn		0	Emission Factors (lb per BDT)	13	125	10	6	6	3667
				Pounds Produced	208,000	2,000,000	160,000	96,000	96,000	58,672,000
Origin to Loyalton via	Transport			Chip Van Emission Factors (g/mile)	0.4	40	0.5	1	17	2222
		Chip Van	173,059	Emissions Produced (pounds)	153	15,261	191	382	6,486	847,760
Kings Beach	Transport		Chip Van Emission Factors (g/mile)		0.4	40	0.5	1	17	2222
			Medium Duty Vehicle Emission Factors (g/mile)		0.15	11	0.1	0.5	11.4	2000
Chip Van Factors		Chip Van	103,633	Emissions Produced (pounds)	91	9,139	114	228	3,884	507,663
Medium Duty Factors		SU-20	239,891	Emissions Produced (pounds)	79	5,818	53	264	6,029	1,057,738
Medium Duty Factors		30 yd dump	323,853	Emissions Produced (pounds)	107	7,854	71	357	8,139	1,427,946
Medium Duty Factors		20 yd dump	479,781	Emissions Produced (pounds)	159	11,635	106	529	12,058	2,115,476

Emissions Calculations - Cabin Creek										
Location	Process	Vehicle Type	Miles Driven	Emissions Factors	PM10	CO	NMOC	CH4	Nox	CO2
On Site	Open Burn		0	Emission Factors (lb per BDT)	13	125	10	6	6	3667
				Pounds Produced	208,000	2,000,000	160,000	96,000	96,000	58,672,000
Origin to Loyalton via	Transport			Chip Van Emission Factors (g/mile)	0.4	40	0.5	1	17	2222
		Chip Van	173,059	Emissions Produced (pounds)	153	15,261	191	382	6,486	847,760
Kings Beach	Transport		Chip Van Emission Factors (g/mile)		0.4	40	0.5	1	17	2222
			Medium Duty Vehicle Emission Factors (g/mile)		0.15	11	0.1	0.5	11.4	2000
Chip Van Factors		Chip Van	74,564	Emissions Produced (pounds)	66	6,575	82	164	2,795	365,264
Medium Duty Factors		SU-20	172,601	Emissions Produced (pounds)	57	4,186	38	190	4,338	761,043
Medium Duty Factors		30 yd dump	233,012	Emissions Produced (pounds)	77	5,651	51	257	5,856	1,027,408
Medium Duty Factors		20 yd dump	345,203	Emissions Produced (pounds)	114	8,371	76	381	8,676	1,522,086

The three charts above will be used to determine the most cost effective and environmental acceptable transportation process.

The key components to consider from a logistics perspective are;

- Facility access
    - The facility access and truck handling capability
        - What is the maximum truck length?
        - What are the dumping limitations?
        - What are the storage capabilities?
- Product Distribution
    - Location and volume of the material
        - Direct access to the processing facility versus dumping at a central site for processing.
- Miles Driven
    - This is depending on the site selected and the biomass product distribution.
    - The truck size is the primary consideration for miles driven.
    - Road conditions and seasonal weather restrictions could impact the miles driven
- Vehicle Emissions versus the current processing methods emissions.
    - The truck size is the primary consideration for the vehicle emissions created.
        - Although the smaller truck produces fewer emissions, the smaller truck must travel more mile, offsetting the gain.

Subtask 3.3 Summary;

The factors considered for Subtask 3.3 are material distribution (where is it located), transportation method (truck type and size) and the roadway (access and weather restrictions).

These factors together will determine the best strategy to move material from the source to the LTR facility. It takes all three to define the best model. There needs to be consideration for the total miles driven, the truck size and handling capabilities, and the resulting environmental impact of each selected variable. While the closest facility will result in the fewest miles driven, that specific facility may not be capable of accepting the largest capacity vehicle, resulting in the need to use a smaller truck resulting in more miles driven and greater emissions created. While the emissions created by these three factors are measurable, Table 3.3.7 clearly shows that any of the transportation model options significantly reduce the environmental impacts associated with the current pile and burn scenario.

Subtask 3.4: Assess the year round onsite/offsite storage requirements for the program. Determine the minimum/maximum requirements for material needed to support the project during potential logistics or material interruptions.

The proposed LTR facility (if Kings Beach were selected), including power generation, biomass wood chip storage and delivery truck access, would require less than two acres. The facility will accommodate up to seven days of wood chips required to fuel the facility. At a consumption rate of up to 61 Bone Dry Ton (BDT) per day, the facility would need to store up to 424 BDT. Biomass material requirements in excess of the seven day onsite storage capacity would be delivered separately. During the summer months when material availability is at its highest, material would flow direct to the facility from the Lake Tahoe Basin Fuels Treatment projects. Any excess would be directed to the offsite storage location at Cabin Creek for the winter fuel.

The major urban wood processing facility east of the City of Colfax is the Eastern Regional Material Recycling Facility operation at Cabin Creek. This facility is currently being considered as a potential storage facility under the scenario with a Kings Beach biomass plant. (Another scenario evaluates Cabin Creek for both storage and energy production). From 2005 through 2009, the MRF has processed and sold an average of 18,000 Ton per year (Table 3.3.8). The MRF currently operates a 1050 horsepower and 500 horsepower grinder. The total of both grinders cannot exceed 650 hours of operation per quarter. They are operating at 10% capacity at this time. This material, along with any excess material from the regions fuel treatment processes, can be used to supplement any demand of the LTR facility.

Table 3.4.1, Tonnage processed through the MRF for Biomass and Erosion control (Donica, MRF)

2005		2006		2007		2008		2009	
Month	**Ton**	**Month**	**Ton**	**Month**	**Ton**	**Month**	**Ton**	**Month**	**Ton**
JAN	88	JAN	1,717	JAN	1,789	JAN	1,011	JAN	1,273
FEB	-	FEB	1,272	FEB	1,210	FEB	1,580	FEB	1,020
MAR	1,396	MAR	661	MAR	1,041	MAR	1,639	MAR	1,712
APR	2,345	APR	810	APR	1,240	APR	2,449	APR	1,476
MAY	1,928	MAY	1,235	MAY	1,379	MAY	1,553	MAY	1,908
JUN	2,021	JUN	2,059	JUN	1,425	JUN	1,362	JUN	1,107
JUL	1,999	JUL	1,448	JUL	1,602	JUL	1,491	JUL	1,049
AUG	2,484	AUG	1,639	AUG	1,347	AUG	1,928	AUG	845
SEP	2,165	SEP	1,735	SEP	1,295	SEP	3,104	SEP	1,002
OCT	3,051	OCT	2,127	OCT	3,293	OCT	2,861	OCT	832
NOV	1,916	NOV	2,044	NOV	1,364	NOV	1,578	NOV	800
DEC	1,060	DEC	1,520	DEC	904	DEC	722	DEC	813
Total	**20,453**		**18,265**		**17,890**		**21,279**		**13,838**

Material brought to Cabin Creek will be stored as chipped material. The majority of any material transported for storage will have been chipped on site prior to being transported to Cabin Creek. If unprocessed material arrives at the facility, it will be processed by the MRF and moved to the storage location. The effects of the moisture content of the chipped biomass

material will need to be defined and adjustments made to ensure the proper moisture levels are maintained. Considerations for the physical management of large piles of chipped biomass material will need to be developed. Processing requirements to mitigate spontaneous combustion and water requirements for possible fire suppression will need to be developed.

The winter months pose a greater possibility of material shortage requirements due to the potential of harsh weather in the area. The LTR receives on the average of 125 inches of snow at the lake level and up to 500 inches at the alpine skiing level per year. This may increase the need to stockpile material to fuel the facility.

TSS created a Fuel Pile Storage Calculator which can perform the function of determining the size of the chip pile based upon the needs for MW size using height and number of storage days needed to determine the area requirements. Below is an output based upon the need for six months of chip storage (to allow for an average winter) and a twenty foot high pile.

Table 3.4.2 Fuel Pile Storage Calculator

Biomass Fuel Storage - Cabin Creek

Assumptions:		
1 acre - 43,560 square feet		
208 ft x 208 ft	43,560	
Adjustment for angle of repose - minus 1/2 of height	198.0	
Adjustment for angle of repose - minus 1/2 of height	198.0	
Piling height in feet	20.0	
1 unit of biomass fuel in cubic feet	200	
Adjustment for uncompacted - 1.0	1.0	unit = 1 BDT
Adjustment for compacted - 1.5	1.5	unit = 1.5 BDT
1 MW requires 25 BDT per day	25	
Cubic feet of biomass fuel	784,080	
Units of biomass fuel	3,920	
BDT of biomass fuel - compacted	5,881	
2MW of compacted fuel	118	days of fuel
Acres needed for 6 months @ 2MW	1.5	
Number of storage days needed	180	

Caltrans and the California Highway Patrol (CHP) share the responsibility for ensuring the safe efficient use of the State's highway transportation system through the District's mountain area. Their goal is to keep the motoring public moving through the District's snow areas limiting the necessity of tire chains or excessive delays, while at all times maintaining the safety of their employees and customers.

Whenever Caltrans becomes aware of a highway condition (external, peripheral, or adjacent) that may have an adverse effect to the public safety or health, mitigation measures, such as traffic controls or highway closure, must be considered. The following is a prioritized list of the snow routes in the Sutter/Sierra Region. In the event that reductions in snow removal services may become necessary, the lower priority routes will receive the reductions first in an effort to maintain the service on the higher priority routes.

1. Interstate 80
2. SR 89 south of Truckee
3. SR 28
4. SR 20 east of Washington Jct.
5. SR 89 south of Tahoma
6. SR 267 south of Northstar
7. SR 32 east of Chico
8. SR 89 north of Truckee
9. SR 49 north of Nevada City

TSS Consultants calculates the need to store (pre-stage) up to six months of the required material at Cabin Creek to support the winter season requirements. Up to 10,000 BDT would need to be stored. This would cover approximately 2.0 Acres piled 15 feet high. 10,000 BDT is the total six month requirement, decreasing (16.7% per month) as the material is moved for utilization.

For transportation, the average (chip van) truck movement is approximately seven standard 12.5 BDT capacity trucks per day to support the up to 85 BDT daily requirement. The distance between Cabin Creek and the biomass facility site in Kings Beach via Truckee and Highway 267 is approximately 18.3 miles (one way). This compares to approximately 24 miles (one way) using the route through Tahoe City. The total daily round trip mileage (Truckee to 267) is approximately 145 miles.

The transportation process will need to define any community or roadway restrictions. These factors may dictate the route, truck size, frequency and time of the deliveries. The transportation models will vary depending on the origin of the material. Material coming from projects within the basin will need to be individually modeled to define the least impact on the communities and roadway. Highway 28 is a significant concern. All material being brought in

from a central storage site at Cabin Creek, or outside of the basin, will use the Highway 267 route to Kings Beach. All efforts will be made to use Highway 267 whenever possible.

The proposed LTR facility (if Cabin Creek were selected), including power generation, biomass wood chip storage and delivery truck access, would require more than two acres. The facility will accommodate up to six months of wood chips required to fuel the facility. At a consumption rate of up to 61 Bone Dry Ton (BDT) per day, the facility will store up to 10,000 BDT or half of the maximum amount due to the winter weather and lack of biomass forest operations. The need to transport materials 18.3 miles between Cabin Creek and Kings Beach would be eliminated.

Subtask 3.4 Summary;

The potential for product availability shortages will require some amount of bulk storage. Although material availability in the summer months will rarely be interrupted, the severe Tahoe region winter months could impact the continuous flow of material. For the Kings Beach site it is currently planned to have storage of up to six months to support the ongoing demand of the program. The Eastern Regional Material Recycling Facility (MRF) at Cabin Creek is the logical choice for long term storage of material. The ERL currently manages the region's urban wood fuel processing and has the equipment to process forest urban wood and space to store it. Material would be stored and redirected as needed to ensure the LTR facility maintains adequate stock on hand to fuel the program. If the Cabin Creek site were chosen for the biomass facility, the area has adequate storage area and excess material at the ERL, should the proposed facility need more than has been saved during any one year.

Subtask 3.5: Determine the strategy to process excess product or material that cannot be used at the LTR facility. Develop an alternative solution to allow for direct processing to the existing biomass facilities or material contract.

Once the supply requirement for the new proposed facility and a buffer stock is achieved, particularly for the winter month's supply, all excess material would be processed as it is today. Assuming the MRF at Cabin Creek is used as a primary woody biomass storage facility, any quantity in excess of the supply requirements plus the buffer stock could be sold to one of the regional biomass facilities currently purchasing material. This process could be impacted based on the requirement from regional facilities. Recent changes in the local facility structure could impact the future fuel requirements.

There are currently three active facilities sourcing material from the CFSA. Sierra Pacific Industries in Quincy CA, Rio Bravo in Lincoln CA, and Honey Lake Power in Wendel CA. Together they currently purchase 9,000 BDT of their required 580,000 BDT from the CFSA. Northern Nevada Correctional Center in Carson City NV and Sierra Pacific Industries in Loyalton

CA, were purchasing 32,000 BDT of their required 132,000 BDT from the CFSA before their shutdown in May 2010 and August 2010, respectively.

In addition to the use of biomass material generated in the CFSA for renewable energy, there are additional requirements for value-added uses. Up to 82,000 BDT of material is consumed annually by alternate processes within 100 miles of the Cabin Creek facility. These processes include landscape products, compost and mulch used for soil restoration, and firewood for residential heating *(TSS, "Biomass Fuel Procurement Plan For The Lake Tahoe Basin Biomass Energy Generation Facility, 2010").*

Subtask 3.5 Summary;

Excess material will be made available for alternate processes and biomass facilities in the region. Fuel levels and demand for the LTR facility will be managed by the project's Fuels Procurement Manager. As excess fuel becomes available it would be made available for sale to the regional biomass facilities and value-added processes.