GENERAL INFORMATION

OWNER:
6980 WEST LAKE, LLC.
P.O. BOX 430
RANCHO SANTA FE, CA 92067

CIVIL ENGINEER:
ADRIAN TIESLAU, P.E.
TIESLAU CIVIL ENGINEERING, INC.
3080 NORTH LAKE BLVD
TAHOE CITY, CA 96145
P.O. BOX 412
TAHOE VISTA, CA 96148
(530) 546-4805

LAND SURVEYOR
DEAN JOHNSON, P.L.S.

ARCHITECT:
JLS DESIGN
JOEL SHERMAN
10374 DONNER PASS RD.
P.O. BOX 9385
TRUCKEE, CA 96162
(530) 587-5232

LAND USE PLANNER / LANDSCAPE ARCHITECT:
OGILVY CONSULTING AND LAND USE
850 NORTH LAKE BLVD
TAHOE CITY, CA 96145
(530)583-5800

NORTH TAHOE FIRE PROTECTION DISTRICT:
300 NORTH LAKE BOULEVARD
PO BOX 5879
TAHOE CITY, CA 96145
(530) 583-6913

SOUTHWEST GAS:
JIMMY SMITH
218 INCLINE COURT
INCLINE VILLAGE, NV 89451
(530) 582-7288

LIBERTY ENERGY:
RICK MADRID
701 NATIONAL AVENUE
PO BOX 107
TAHOE VISTA, CA 96148
(530) 546-1720

TAHOE CITY PUBLIC UTILITY DISTRICT:
221 FAIRWAY DRIVE
PO BOX 5249
TAHOE CITY, CA 96145
(530) 583-3796

TAHOE CEDARS WATER COMPANY:
6998 W. LAKE BLVD.
TAHOMA, CA 96142
(530) 525-7555

ADJACENT PROPERTIES:
APN: 98-210-10
OWNER: PUBLIC USE

APN: 98-210-11
OWNER: JOSEPH CALCAGNO

APN: 98-210-34
OWNER: MARR FAMILY, LLC.

APN: 98-210-35
OWNER: STEVE KRANHOLD

APN: 98-210-36
OWNER: TAHOE GROUP, INC.

APN: 98-210-39
OWNER: MICHAEL KING

REVIEWED

NORTH TAHOE FIRE PROTECTION DISTRICT _____ DATE _____

TAHOE CITY PUBLIC UTILITY DISTRICT _____ DATE _____

OWNER/DEVELOPER:

6980 WEST LAKE, LLC
P.O. BOX 430
RANCHO SANTA FE, CA 92067

DEVELOPERS RIGHT-OF-WAY CERTIFICATE

6980 WEST LAKE, LLC., DEVELOPERS OF THE 6980 WEST LAKE BLVD. PLANNED DEVELOPMENT PROJECT HEREBY CERTIFIES THAT ALL REQUIRED RIGHT-OF-WAY AND OTHER LEGAL REQUIREMENTS FOR THE CONSTRUCTION OF ALL IMPROVEMENTS ASSOCIATED WITH THIS PROJECT, INCLUDING CONSTRUCTION PERMITS, WRITTEN CONSENTS, AND RIGHTS OF ENTRY, HAVE BEEN ACQUIRED PRIOR TO APPROVAL OF THESE PLANS. DEVELOPER CERTIFIES THAT DOCUMENTATION TO SUBSTANTIATE THIS CERTIFICATION HAS BEEN SUBMITTED TO PLACER COUNTY. DEVELOPER SHALL HOLD PLACER COUNTY HARMLESS IN THE EVENT THE ABOVE RIGHTS ARE NOT OBTAINED OR ARE DISPUTED. DEVELOPER HEREBY ACKNOWLEDGES AND AGREES THAT UNDISCOVERED ERRORS AND OMISSIONS OR OTHER REVISIONS REQUIRED BY ACTUAL FIELD CONDITIONS SHALL BE CORRECTED AT THE DEVELOPER'S EXPENSE AS DISCOVERED.

AS USED IN THIS CERTIFICATE, "DEVELOPER" SHALL INCLUDE THE DEVELOPER, DEVELOPER'S SUCCESSORS AND ASSIGNS AND DEVELOPER'S AUTHORIZED AGENT(S).

THE UNDERSIGNED HEREBY CERTIFIES THAT HE OR SHE HAS LEGAL AUTHORITY TO EXECUTE THIS CERTIFICATE ON BEHALF OF DEVELOPER, AND TO BIND DEVELOPER TO THE TERMS AND CONDITIONS STATED HEREIN.

SIGNED: _____ TITLE: _____

PRINT NAME: _____ DATE: _____

6980 WEST LAKE, LLC.

6980 WEST LAKE BLVD

PLANNED DEVELOPMENT
CIVIL IMPROVEMENT PLANS
APN: 98-210-30 & 31

SHEET INDEX:

CIVIL TITLE SHEET	C1.0
CIVIL EXISTING CONDITIONS	C2.0
DEMO PLAN	C2.1
LAND COVERAGE EXHIBIT	C2.2
CIVIL GRADING PLAN	C3.0
CIVIL GRADING PLAN	C3.1
CIVIL PROFILE/SECTIONS	C3.2
CIVIL UTILITY PLAN	C4.0
CIVIL UTILITY PLAN	C4.1
SEWER MAIN PROFILES	C4.2
BMP PLAN AND CALCULATIONS	C5.0
BMP PLAN AND CALCULATIONS	C5.1
FIRE TURN-AROUND EXHIBIT	C6.0
CIVIL DETAILS	C7.0
CIVIL DETAILS	C7.1
CIVIL DETAILS	C7.2
CIVIL DETAILS	C7.3
CIVIL UTILITY DETAILS	C7.4
CIVIL UTILITY DETAILS	C7.5
CIVIL UTILITY DETAILS	C7.6
VESTING TENTATIVE MAP PAGE 1 EXISTING	TM1
VESTING TENTATIVE MAP PAGE 2 PROPOSED	TM2
VESTING TENTATIVE MAP PAGE 3 PUBLIC LAKE ACCESS	TM3
LANDSCAPE PLAN	L1.0

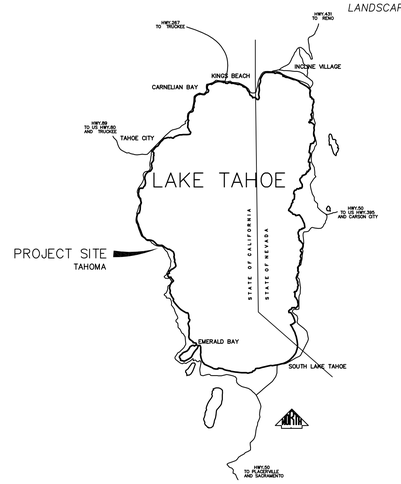

VICINTY MAP

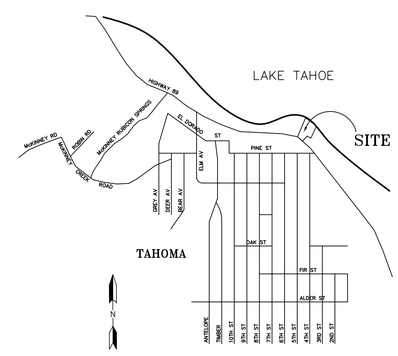

SECTION8, TOWNSHIP 14N & RANGE 17E

LOCATION MAP

RECORDS DRAWING NOTE

ALL INFORMATION SHOWN ON THESE PLANS HAS BEEN PREPARED BY, OR UNDER DIRECTION OF, THE UNDERSIGNED ENGINEER. ADJUSTMENTS MADE IN THE FIELD DURING CONSTRUCTION ARE INCLUDED HEREIN AND ARE BASED UPON FIELD OBSERVATIONS MADE UNDER THE DIRECTION OF OR BY THE UNDERSIGNED AND/OR INFORMATION RECEIVED FROM THE PROJECT OWNER, PROJECT CONTRACTORS AND PUBLIC AGENCIES WHEN THE ENGINEER IS ADVISED IN WRITING OF SUCH CHANGE. THE ENGINEER PREPARING THESE PLANS WILL NOT BE RESPONSIBLE FOR, OR LIABLE FOR, CHANGES TO THESE PLANS NOT AUTHORIZED BY THE ENGINEER.

DATE _____ ENGINEER SIGNATURE (STAMP OR SEAL) _____

2 working days
Call before you Dig.
1-800-227-2600
AVOID CUTTING UNDERGROUND UTILITIES

ESD _____
PLN16-00067 _____

PLACER COUNTY APPROVAL

PLANS ARE ACCEPTED FOR USE AS WORKING DOCUMENTS. UNDISCOVERED ERRORS AND OMISSIONS SHALL BE CORRECTED AT THE DEVELOPER'S EXPENSE AS DISCOVERED. THIS APPROVAL EXPIRES THREE (3) YEARS FROM THE APPROVAL DATE UNLESS AN EXTENSION IS APPROVED IN WRITING BY THE COUNTY DEPARTMENT(S) BELOW OR CONSTRUCTION HAS BEEN INITIATED. EXPIRATION WILL RESULT IN A REQUIREMENT TO RESUBMIT THE PLANS FOR PLAN CHECK, PAYMENT OF CURRENT FEES AND COMPLIANCE WITH CURRENT COUNTY STANDARDS.

COMMUNITY DEVELOPMENT RESOURCE AGENCY
ENGINEERING AND SURVEYING DIVISION

SIGNED: _____ TITLE: _____

PRINTED NAME: _____ TITLE: _____

COMMUNITY DEVELOPMENT RESOURCE AGENCY
PLANNING SERVICES DIVISION

SIGNED: _____ TITLE: _____

PRINTED NAME: _____ TITLE: _____

DEPARTMENT OF HEALTH AND HUMAN SERVICES
ENVIRONMENTAL HEALTH DIVISION

SIGNED: _____ TITLE: _____

PRINTED NAME: _____ TITLE: _____

ENVIRONMENTAL HEALTH NOTE:

IF AT ANY TIME DURING THE COURSE OF EXECUTING THE PROPOSED PROJECT, EVIDENCE OF SOIL AND/OR GROUNDWATER CONTAMINATION WITH HAZARDOUS MATERIAL IS ENCOUNTERED, THE APPLICANT SHALL IMMEDIATELY STOP THE PROJECT AND CONTACT ENVIRONMENTAL HEALTH SERVICES HAZARDOUS MATERIALS SECTION. THE PROJECT SHALL REMAIN STOPPED UNTIL THERE IS RESOLUTION OF THE CONTAMINATION PROBLEM TO THE SATISFACTION OF ENVIRONMENTAL HEALTH SERVICES AND TO THE LAHONTAN REGIONAL WATER QUALITY CONTROL BOARD.

ESTIMATED EARTHWORK
CUT = ~4,800 CY
FILL = ~500 CY

BASIS OF ELEVATION:

DATUM IS BASED ON PROJECT BENCHMARK 8016 A TEMPORARY CONCRETE NAIL NEAR SOUTHWEST PROPERTY LINE ACROSS STATE ROUTE 89 PER ANDREGG GEOMATICS PLAN OF 3/2015 HAVING AN ELEVATION OF 6280.87, WHICH CLOSELY CORRESPONDS TO LAKE TAHOE ELEVATION AT TIME OF RESURVEY (LAKE TAHOE DATUM).

BASIS OF BEARING:

THE MERIDIAN FOR THIS MAP IS IDENTICAL TO THAT AS SHOWN ON THE RECORD OF SURVEY FILED IN BOOK 19 OF SURVEYS AT PAGE 26, O.R.P.C. AND IS THE COUNTY LINE, AND SHOWN BETWEEN THE FOUND MONUMENTS AS SOUTH 89°48'00" WEST 2362.19'.

INSTRUCTIONS TO CONTRACTORS

PRIOR TO COMMENCING WORK
48 HOUR NOTICE REQUIRED

BEFORE COMMENCING WORK, ALL PLANS, SCHEDULES, AND PROGRAMS MUST BE SUBMITTED AND APPROVED IN CONFORMANCE WITH THE REQUIREMENTS OF SECTION 7-1.01E, 7-1.01G AND 8-1.04 OF THE PLACER COUNTY GENERAL SPECIFICATIONS DATED AUGUST 2005, AND THE STATE OF CALIFORNIA STANDARD SPECIFICATIONS DATED 2010. BEFORE COMMENCING WORK, THE CONTRACTOR SHALL NOTIFY THE PLACER COUNTY DEPARTMENT OF ENGINEERING & SURVEYING, CONSTRUCTION DIVISION 48 HOURS IN ADVANCE OF THE TIME OF COMMENCEMENT.

PLACER COUNTY ESD — LAKE TAHOE (530) 581-6227

TRPA COMPLIANCE DIVISION — (775) 588-4547

REV.	DATE	DESCRIPTION	APPROVED	DATE

OWNERS INFORMATION
6980 WEST LAKE, LLC
P.O. Box 430
Rancho Santa Fe, CA 92067

TIESLAU CIVIL ENGINEERING, INC.
3080 NORTH LAKE BLVD
TAHOE CITY, CA 96145
P.O. BOX 412
TAHOE VISTA, CA 96148
ATCIVIL.COM
(530) 546-4805

REGISTERED PROFESSIONAL ENGINEER
ADRIAN TIESLAU
No. 60323
CIVIL
STATE OF CALIFORNIA

TITLE SHEET
TAHOE CEDARS
TAHOMA — PLACER COUNTY — CALIFORNIA

COMP:____ DESIGN:
DRWN: PRJ.ENG: AT

PROJECT #: 16.005
SCALE:
HORIZONTAL: N/A
VERTICAL:

DATE: 2-24-17

C1.0

NOTE:

1. EXHIBIT BASED ON TOPOGRAPHIC AND BOUNDARY SURVEY PROVIDED BY ANDREGG GEOMATICS, INC.

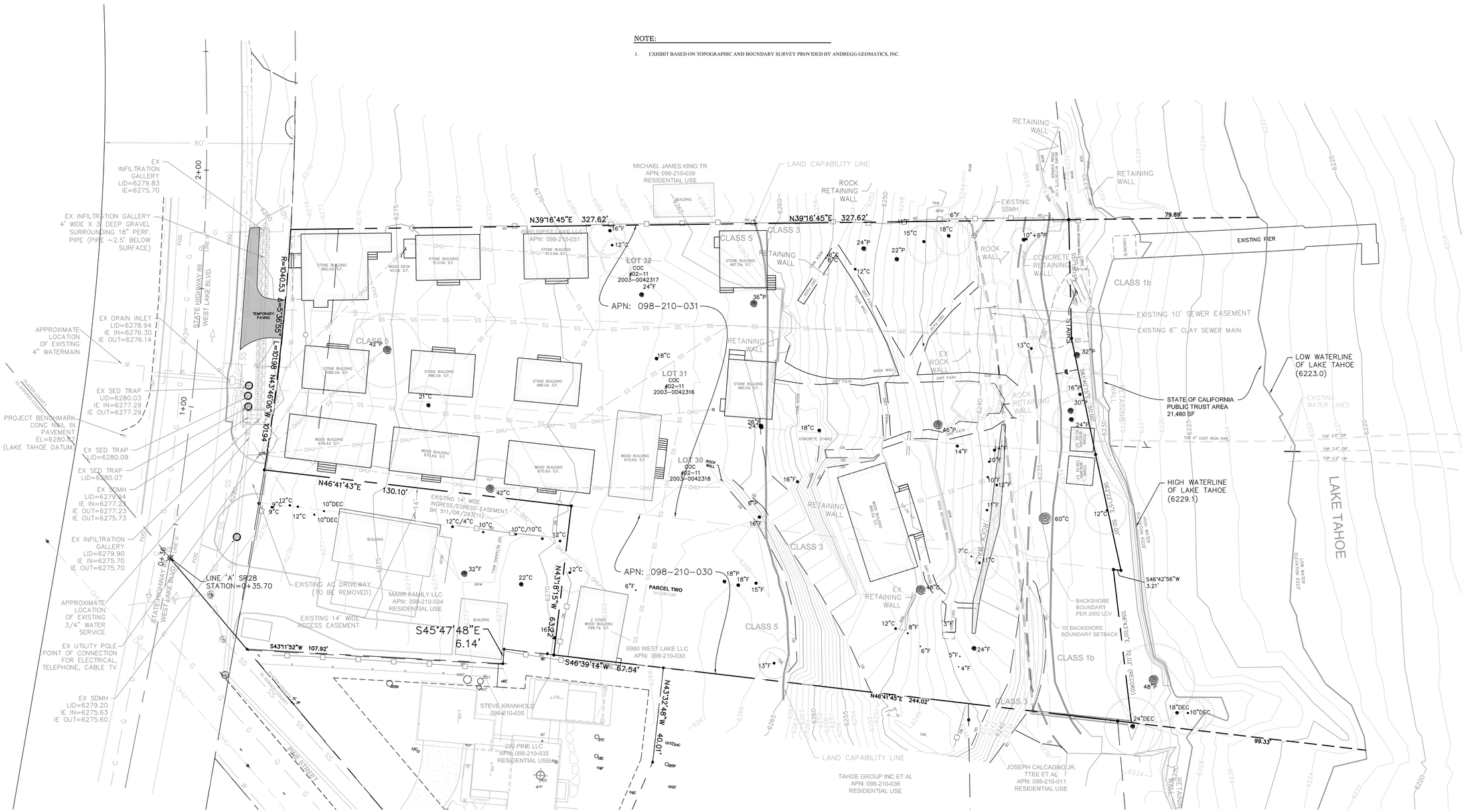

REV	DATE	DESCRIPTION	APPROVED	DATE

OWNERS INFORMATION
6980 WEST LAKE, LLC
P.O. Box 430
Rancho Santa Fe, CA 92067

TIESLAU CIVIL ENGINEERING, INC.
3080 NORTH LAKE BLVD
TAHOE CITY, CA 96145
P.O. BOX 412
TAHOE VISTA, CA 96148
ATCIVIL.COM
(530) 546-4805

REGISTERED PROFESSIONAL ENGINEER ADRIAN TIESLAU No. 60323 CIVIL STATE OF CALIFORNIA

EXISTING CONDITIONS
TAHOE CEDARS

TAHOMA PLACER COUNTY CALIFORNIA

COMP:____ DESIGN:
DRWN: PRJ.ENG: AT

PROJECT #: 16.005
SCALE:
HORIZONTAL: N/A
VERTICAL:

DATE: 2-24-17

C2.0

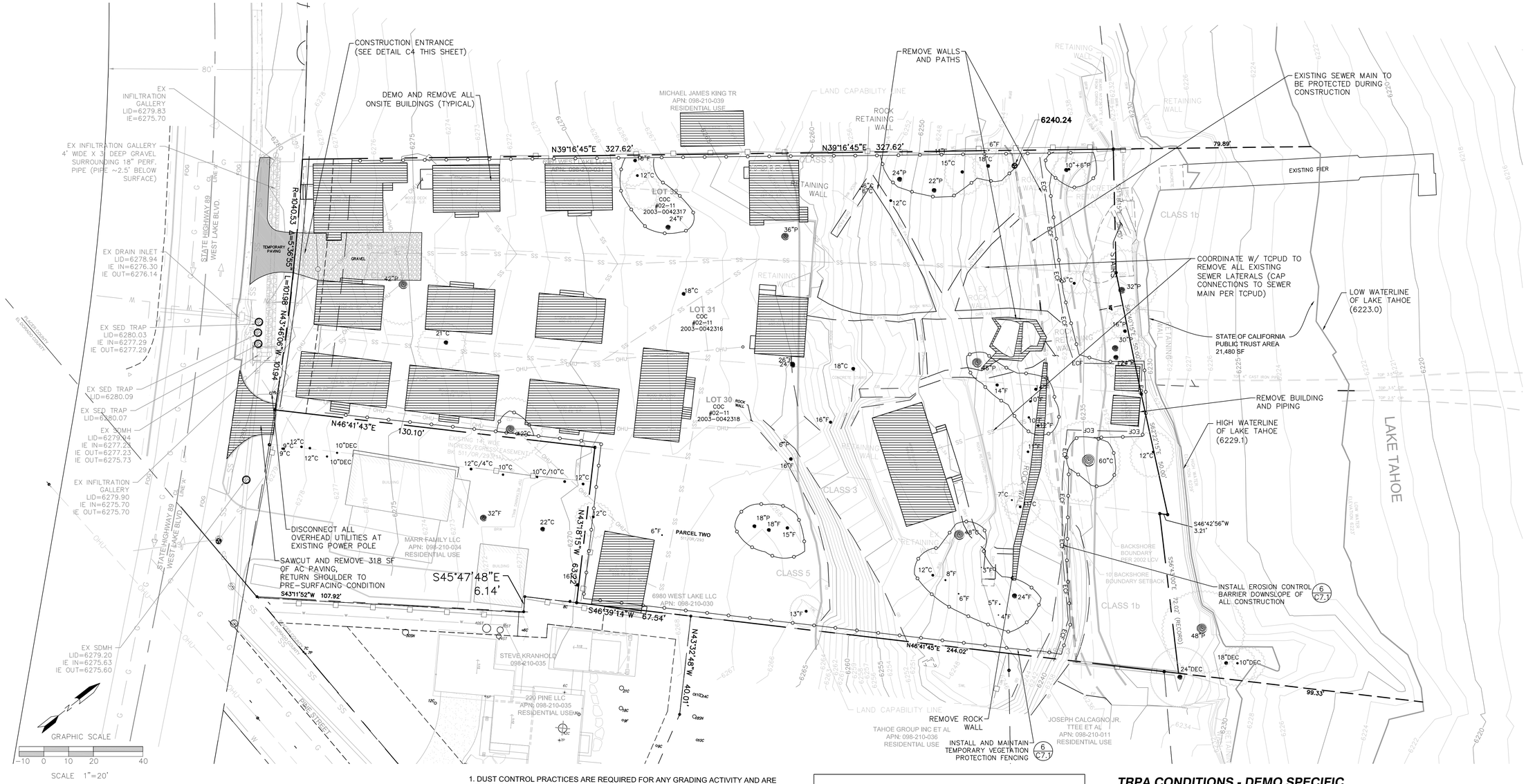

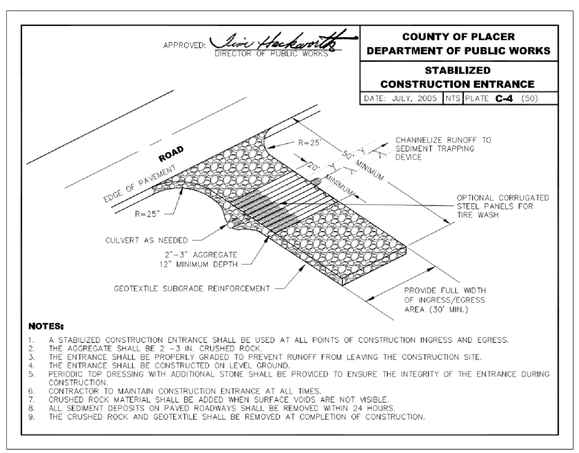

1. DUST CONTROL PRACTICES ARE REQUIRED FOR ANY GRADING ACTIVITY AND ARE APPLICABLE TO MOST CONSTRUCTION SITES. ALL EXPOSED AREAS OF THE APPROVED CONSTRUCTION SITE
SHALL BE MULCHED WITH A 2 TO 3 INCH LAYER OF PINE NEEDLES OR WOOD CHIPS. MULCHING TO A DEPTH, WHICH APPROACHES OR EXCEEDS 4 INCHES NEGATIVELY EFFECTS SOIL PROPERTIES AND CAN INHIBIT REVEGETATION. STRAW MULCH WILL NOT BE ACCEPTABLE. OTHER TECHNIQUES SUCH AS EROSION CONTROL BLANKETS CAN BE SUBSTITUTED FOR MULCH IF THEY ARE INSTALLED AND MAINTAINED ACCORDING TO MANUFACTURERS SPECIFICATIONS.

2. FENCING OF "NON-APPROVED" CONSTRUCTION AREAS SHALL BE SPECIFIED TO BE AT LEAST 48 INCHES HIGH AND SHALL BE CONSTRUCTED OF METAL POSTS AND EITHER ORANGE CONSTRUCTION FENCING OR METAL MESH FENCING ALSO AT LEAST 48 INCHES HIGH.

3. NO MATERIAL OR EQUIPMENT SHALL ENTER OR BE PLACED IN THE AREAS PROTECTED BY FENCING OR OUTSIDE THE APPROVED CONSTRUCTION AREA WITHOUT PRIOR APPROVAL.

4. TO REDUCE SOIL DISTURBANCE AND DAMAGE TO VEGETATION, THE AREA OF DISTURBANCE DURING THE CONSTRUCTION OF A STRUCTURE SHALL BE LIMITED TO THE AREA BETWEEN THE FOOTPRINT OF THE BUILDING AND THE PUBLIC ROAD. FOR THE REMAINDER OF THE SITE, THE DISTURBANCE AREA SHALL NOT EXCEED 12 FEET FROM THE FOOTPRINT OF THE STRUCTURE, PARKING AREA OR CUT/FILL SLOPE. THIS FENCING SHALL BE CLEARLY SHOWN ON THE APPROVED PLANS. ALL CHANGES OR EXCEPTIONS SHALL BE SHOWN ON A REVISED SET OF PLANS FOR APPROVAL. ANY "IN-THE-FIELD" CHANGES SHALL BE APPROVED BY THE ENGINEER.

SURVEY MONUMENT PRESERVATION NOTE:

The contractor is responsible for the preservation and protection of existing survey and property corner monuments that exist at the time of construction in the area where construction activities occur. Monuments disturbed, or lost, due to construction activities will require that the contractor have them replaced, in kind, by a licensed California Land Surveyor - who will be required to file either a corner record, or record of survey with the County - whichever will meet the requirements of L.S. ACT Section 8771. (b).

SURVEY:
EXHIBIT BASED ON TOPOGRAPHIC AND BOUNDARY SURVEY PROVIDED BY ANDREGG GEOMATICS, INC.

TRPA:
A LAKE TAHOE NATIVE SPECIES SEED MIX WILL BE APPLIED PRIOR TO APPLICATION OF MULCH.

WATER:
LAKE INTAKE TO BE ABANDONED. NO CURRENT WATER SUPPLY TO PROPERTY.

NATURAL GAS:
NO CURRENT SERVICE TO PROPERTY (IF GAS LINE IS ENCOUNTERED, CONTACT SOUTHWEST GAS IMMEDIATELY).

2 working days
Call before you Dig.
1-800-227-2600
AVOID CUTTING UNDERGROUND UTILITIES

TRPA CONDITIONS - DEMO SPECIFIC

1. THIS PERMIT AUTHORIZES THE DEMOLITION OF 14 EXISTING STRUCTURES AND ASSOCIATED FOUNDATIONS. WALLS AND PATHS ABOVE THE BACKSHORE SETBACK BOUNDARY WILL ALSO BE REMOVED. THE WALL ALONG THE SHORELINE WILL REMAIN. TWO STONE BUILING LOCATED WITHIN THE BACKSHORE BOUNDARY WILL ALSO BE REMOVED. ALL BUILDING FOUNDATIONS WILL BE BACKFILLED WITH CLEAN FILL AND FINISHED GRADES WILL BE CONSISTENT WITH ADJACENT NATURAL GRADES. TREE REMOVAL IS AUTHORIZED BY TRPA PERMIT 08552 WHICH ALLOWS FOR THE REMOVAL OF 18 TREES GREATER THAN 14" DBH AND FOUR TREES GREATER THAN 30"DBH. A TEMPORARY ASPHALT PAVING INGRESS/EGRESS WILL BE ESTABLISHED TO PROVIDE A STAGING AREA FOR CONSTRUCTION VEHICLES AND REDUCE TRACKING OF SEDIMENT OFF SITE. UPON COMPLETION OF THE DEMOLITION THE SITE WILL BE STABILIZED WITH MULCH AND REVEGETATED WITH A NATIVE VEGETATION SEED MIX. NO NEW LAND COVERAGE IS PROPOSED OR AUTHORIZED BY THIS PERMIT. THE STRUCTURES ARE NOT CONSIDERED HISTORICALLY SIGNIFICANT PURSUANT TO PREVIOUS TRPA DETERMINATIONS.

3A. THE SITE PLAN SHALL BE REVISED TO RELOCATE THE TEMPORARY EROSION CONTROL FENCE UPLAND, BEYOND THE BACKSHORE BOUNDARY SETBACK, EXCEPT IN THE IMMEDIATE VICINITY OF THE TWO STONE BUILDINGS TO BE REMOVED.

5. NO TREE REMOVAL IS AUTHORIZED BY THIS PERMIT. ALL TREE REMOVAL SHALL OCCUR PURSUANT TO TRPA TREE REMOVAL PERMIT 08552.

7. ANY NORMAL CONSTRUCTION ACTIVITIES CREATING NOISE IN EXCESS OF THE TRPA NOISE STANDARDS SHALL BE CONSIDERED EXEMPT FROM SAID NOISE STANDARDS PROVIDED AL SUCH WORK IS CONDUCTED BETWEEN THE HOURS OF 8:00 AM AND 6:30 PM.

8. GRADING IS PROHIBITED ANY TIME OF THE YEAR DURING PERIODS OF PRECIPITATION AND FOR THE RESULTING PERIOD OF TIME WHEN THE SITE IS COVERED WITH SNOW, OR IS IN A SATURATED, MUDDY, OR UNSTABLE CONDITION.

9. THIS SITE SHALL BE WINTERIZED IN ACCORDANCE WITH THE PROVISIONS OF ATTACHMENT Q BY OCTOBER 15TH UNLESS A GRADING SEASON EXCEPTION IS GRANTED IN WRITING BY TRPA PRIOR TO OCTOBER 15TH.

10. TEMPORARY AND PERMANENT BMPS MAY BE FIELD-FIT AS APPROPRIATE BY THE TRPA INSPECTOR.

11. ANY CHANGE TO THE PROJECT REQUIRES APPROVAL (EXCEPT FOR THE TRPA EXEMPT ACTIVITIES) OF A TRPA PLAN REVISION PERMIT PRIOR TO THE CHANGES BEING MADE TO ANY ELEMENT OF THE PROJECT (I.E. STRUCTURAL MODIFICATIONS, COVERAGE, SCENIC, GRADING, BMPS, ETC.). FAILURE TO OBTAIN PRIOR APPROVAL FOR MODIFICATIONS MAY RESULT IN MONETARY PENALTIES AND REMOVAL OF THE UNAPPROVED ELEMENTS.

REV	DATE	DESCRIPTION	APPROVED	DATE

OWNERS INFORMATION
6980 WEST LAKE, LLC
P.O. Box 430
Rancho Santa Fe, CA 92067

TIESLAU CIVIL ENGINEERING, INC.
3080 NORTH LAKE BLVD
TAHOE CITY, CA 96145
P.O. BOX 412
TAHOE VISTA, CA 96148
ATCIVIL.COM
(530) 546-4805

REGISTERED PROFESSIONAL ENGINEER ADRIAN TIESLAU No. 60323 CIVIL STATE OF CALIFORNIA

DEMO PLAN
TAHOE CEDARS

TAHOMA PLACER COUNTY CALIFORNIA

COMP: DESIGN:
DRWN: PRJ.ENG: AT

PROJECT #: 16.005
SCALE:
HORIZONTAL: N/A
VERTICAL:

DATE: 2-24-17

C2.1

NOTE:

1. EXHIBIT BASED ON TOPOGRAPHIC AND BOUNDARY SURVEY PROVIDED BY ANDREGG GEOMATICS, INC.

COVERAGE CALCULATIONS

APN: 098-210-030/031 = 60,140 S.F. (To MHW)

ALLOWABLE COVERAGE

LAND CAP	SOIL TYPE	ALLOWABLE	TOTAL AREA	ALLOWABLE AREA
1b		1%	6,881 S.F.	69 S.F.
3	TcE	5%	23,796 S.F.	1,190 S.F.
5	TcC	25%	29,463 S.F.	7,365 S.F.
			60,140 S.F.	8,624 S.F.

TOTAL EXISTING COVERAGE	41,340 S.F.
Class (1b)	**6,327 SF**
Buildings	227 S.F.
Concrete stairs, landings, stoops, walks and patios	1,036 S.F.
BBQs	38 S.F.
Dirt paths,roads, patios	5,026 S.F.
Class (3)	**12,249 SF**
Buildings	1,926 S.F.
Concrete stairs, landings, stoops, walks and patios	548 S.F.
BBQs	13 S.F.
Dirt paths,roads, patios	9,764 S.F.
Class (5)	**22,764 SF**
Buildings	6,666 S.F.
Stone steps	239 S.F.
Concrete stairs, landings, stoop, walk and patios	18 S.F.
Dirt paths, roads, patios	15,841 S.F.

TOTAL PROPOSED COVERAGE	27,877 S.F.
Class (1b)	**50 SF**
PIER (AT GRADE)	50 S.F.
Class (3)	**11,591 SF**
Paver Drveway	1,483 S.F.
Building Unit #1	3,498 S.F.
Building Unit #2	2,960 S.F.
Building Unit #3 (portion of)	3,184 S.F.
Stairs and landings (no reduction)	466 S.F.
Class (5)	**16,236 SF**
Asphalt Driveway	5,443 S.F.
Paver Drveway	2,839 S.F.
Building Unit #3 (portion of)	58 S.F.
Building Unit #4	2,673 S.F.
Building Unit #5	3,111 S.F.
Building Unit #6	2,112 S.F.

LEGEND

EXISTING VERIFIED COVERAGE TO BE REMOVED

PROPOSED LAND COVERAGE

PROPOSED COVERAGE OVER EXISTING

REV	DATE	DESCRIPTION	APPROVED	DATE

OWNERS INFORMATION
6980 WEST LAKE, LLC
P.O. Box 430
Rancho Santa Fe, CA 92067

TIESLAU CIVIL ENGINEERING, INC.
3080 NORTH LAKE BLVD
TAHOE CITY, CA 96145
P.O. BOX 412
TAHOE VISTA, CA 96148
ATCIVIL.COM
(530) 545-4805

REGISTERED PROFESSIONAL ENGINEER ADRIAN TIESLAU No. 60323 CIVIL STATE OF CALIFORNIA

LAND COVERAGE EXHIBIT

TAHOE CEDARS

TAHOMA PLACER COUNTY CALIFORNIA

COMP:____ DESIGN:
DRWN: PRJ.ENG: AT

PROJECT #: 16.005

SCALE:
HORIZONTAL: N/A
VERTICAL:

DATE: 2-24-17

C2.2

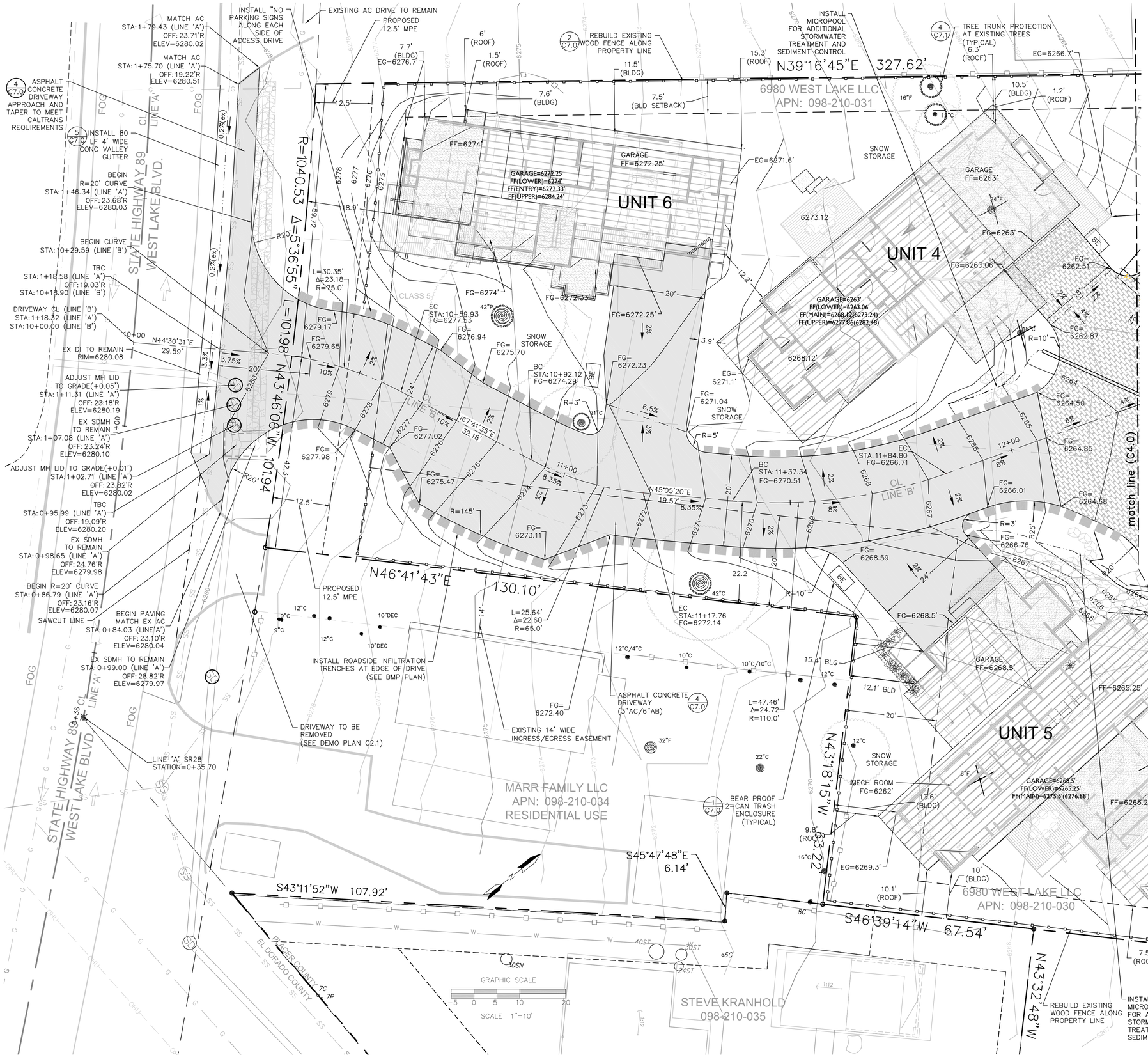

DRAINAGE REPORT

A DRAINAGE REPORT INCLUDING REQUIREMENTS BY PLACER COUNTY AND THE TAHOE REGIONAL PLANNING AGENCY WILL BE PREPARED AS A PART OF THIS PROJECT. THE DRAINAGE REPORT WILL DEMONSTRATE THAT PROPOSED STORMWATER FLOWS FROM THE SITE ARE LESS THAN THE FLOWS FROM THE EXISTING SITE. THE DRAINAGE REPORT WILL ALSO INCLUDE BMP SIZING AND CALCULATIONS AS REQUIRED BY THE TRPA. THE REPORT WILL ALSO INCLUDE MAINTENANCE RECOMMENDATIONS TO ENSURE LONG TERM FUNCTION OF THE PROPOSED STORMWATER CONVEYANCE AND COLLECTION FACILITIES.

WATER DEMAND CALULATIONS

FIXTURE	QUANTITY	FIXTURE UNITS	TOTAL
BAR SINK	4	1	4
BATHTUB	11	2	22
WASHER	6	2	12
SHOWER	15	2	30
SINK	62	2	124
TOILET	26	6	156
HOSE BIB	12	2	24
			372 UNITS

PER UPC CHART A-2 --- DOMESTIC DEMAND = 125 GPM

LOW IMPACT DEVELOPMENT (LID) DESIGN PLAN

LOW IMPACT DEVELOPMENT (LIDS) PRACTICES WILL BE INCORPORATED INTO THE SITE DESIGN AND CONSTRUCTION. LID PRINCIPLES ARE MODELED AFTER NATURE TO MANAGE URBAN RUNOFF AT THE SOURCE USING LOCAL AND SMALL CONTROLS THAN TRADITIONAL CENTRALIZED STORMWATER TREATMENT. THE GOAL OF LID IS TO MIMIC THE PREDEVELOPMENT HYDROLOGY OF A SITE BY USING DESIGN PRACTICES AND TECHNIQUES THAT EFFECTIVELY CAPTURE, FILTER, STORE, EVAPORATE, DETAIN AND INFILTRATE RUNOFF CLOSE TO ITS SOURCE. SITE DESIGN FEATURES CAN ACCOMPLISH THESE GOALS BY DIRECTING RUNOFF TO VEGETATED AREA, PROTECTING NATIVE VEGETATION AND OPEN SPACE, AND REDUCING THE AMOUNT OF HARD SURFACES AND SOIL COMPACTION. LID ADDRESSES STORMWATER THROUGH SMALL, COST-EFFECTIVE LANDSCAPE FEATURES AT THE LOCAL LEVEL. LID IS A VERSATILE APPROACH THAT INCLUDES BOTH SOURCE CONTROLS, STRUCTURAL TREATMENT CONTROLS, AND STRUCTURAL TREATMENT CONTROLS EQUALLY WELL TO THE REDEVELOPMENT PROJECT.

NOISE

THE CONTRACTOR SHALL INSURE THAT ALL CONSTRUCTION VEHICLES OR EQUIPMENT, FIXED OR MOBILE, OPERATED WITHIN CLOSE PROXIMITY OF A RESIDENTIAL DWELLING SHALL BE EQUIPPED WITH PROPERLY OPERATING AND MAINTAINED MUFFLERS AT ALL TIMES DURING PROJECT CONSTRUCTION. IT IS THE OWNERS RESPONSIBILITY TO OBTAIN THE SERVICES OF A QUALIFIED ACOUSTICAL PROFESSIONAL TO VERIFY PROPER EQUIPMENT MUFFLERS IF CONCERNS RELATING TO THE ISSUE ARISE.

CONSTRUCTION NOISE EMANATING FROM ANY CONSTRUCTION ACTIVITIES FOR WHICH A GRADING PERMIT IS REQUIRED IS PROHIBITED ON SUNDAYS AND FEDERAL HOLIDAYS, AND SHALL ONLY OCCUR:

a.) MONDAY THROUGH FRIDAY, 6:00 AM TO 8:00 PM (DURING DAYLIGHT SAVINGS)
b) MONDAY THROUGH FRIDAY, 7:00 AM TO 8:00 PM (DURING STANDARD TIME)
c) SATURDAYS, 8:00 AM TO 6:00 PM

IN ADDITION, TEMPORARY SIGNS 4 FEET X 4 FEET SHALL BE LOCATED THROUGHOUT THE PROJECT AS DETERMINED BY THE DEVELOPMENT REVIEW COMMITTEE, AT THE INTERSECTION AND ONE OF THE DRIVEWAY ENCROACHMENTS ABOVE DEPICTING THE ABOVE CONSTRUCTION HOUR LIMITATIONS. SAID SIGNS SHALL INCLUDE A TOLL FREE PUBLIC INFORMATION PHONE NUMBER WHERE SURROUNDING RESIDENTS CAN REPORT VIOLATIONS AND THE DEVELOPER WILL RESPOND AND RESOLVE NOISE VIOLATIONS. THIS CONDITION SHALL BE INCLUDED ON THE IMPROVEMENT PLANS.

ADVISORY COMMENT: ESSENTIALLY, QUIET ACTIVITIES, WHICH DO NOT INVOLVE HEAVY EQUIPMENT OR MACHINERY, MAY OCCUR AT OTHER TIMES. WORK OCCURRING WITHIN AN ENCLOSED BUILDING, SUCH AS A HOUSE UNDER CONSTRUCTION WITH THE ROOF AND SIDING ON, CAN OCCUR AT OTHER TIMES AS WELL. THE PLANNING DIRECTOR IS AUTHORIZED TO WAIVE THE TIME FRAMES BASED ON SPECIAL CIRCUMSTANCES, SUCH AS ADVERSE WEATHER CONDITIONS.

CONSTRUCTION RELATED CONDITIONS OF APPROVAL

1. THE FOLLOWING STANDARD NOTES SHALL BE LISTED ON THE IMPROVEMENT/GRADING PLAN, OR AS AN ATTACHED FORM:
   a. DURING CONSTRUCTION THE CONTRACTOR SHALL UTILIZE EXISTING POWER SOURCES (E.G., POWER POLES) OR CLEAN FUEL (E.G., GASOLINE, BIODIESEL, NATURAL GAS) GENERATORS RATHER THAN TEMPORARY DIESEL POWER GENERATORS.
   b. DURING CONSTRUCTION, THE CONTRACTOR SHALL MINIMIZE IDLING TIMES TO A MAXIMUM OF 5 MINUTES FOR ALL DIESEL POWERED EQUIPMENT.
   c. SIGNS SHALL BE POSTED IN THE DESIGNATED QUEUING AREAS OF THE CONSTRUCTION SITE TO LIMIT IDLING TO A MAXIMUM OF 5 MINUTES.
   d. IDLING OF CONSTRUCTION RELATED EQUIPMENT AND CONSTRUCTION RELATED VEHICLES SHOULD NOT OCCUR WITHIN 1,000 FEET OF ANY SENSITIVE RECEPTOR.
2. THE DISTRICT'S RULES AND REGULATIONS SHALL BE LISTED AS STANDARD NOTES, OR AS AN ATTACHED FORM TO ALL SUBSEQUENT GRADING/IMPROVEMENT PLANS. A LIST OF THE DISTRICT'S RULES AND REGULATIONS CAN BE FOUND IN APPENDIX B OF THE DISTRICT'S CEQA HANDBOOK1.
3. PRIOR TO APPROVAL OF GRADING OR IMPROVEMENT PLANS, ON PROJECT SITES GREATER THAN ONE ACRE, THE APPLICANT SHALL SUBMIT A CONSTRUCTION EMISSION/DUST CONTROL PLAN (DCP) TO THE PLACER COUNTY AIR POLLUTION CONTROL DISTRICT. THE APPLICANT SHALL NOT BREAK GROUND PRIOR TO RECEIVING DISTRICT APPROVAL OF THE DCP, AND DELIVERING THAT APPROVAL TO THE LOCAL JURISDICTION ISSUING THE PERMIT. THE DCP IS AVAILABLE ONLINE AND CAN BE SUBMITTED VIA THE DISTRICT'S WEBSITE2.

OPERATIONAL RELATED CONDITIONS OF APPROVAL

1. THE DISTRICT'S RULES AND REGULATIONS SHALL BE LISTED AS STANDARD NOTES OR AS AN ATTACHED FORM TO ALL SUBSEQUENT BUILDING PERMITS FOR THE OPERATIONAL PHASE OF THE PROJECT. A LIST OF THE DISTRICT'S RULES AND REGULATIONS CAN BE FOUND IN APPENDIX D OF THE DISTRICT'S CEQA HANDBOOK.
2. IN COMPLIANCE WITH DISTRICT RULES 2253, ONLY U.S. EPA PHASE II CERTIFIED WOOD BURNING DEVICES SHALL BE ALLOWED IN SINGLE FAMILY RESIDENCES. THE EMISSION POTENTIAL FROM EACH RESIDENCE SHALL NOT EXCEED A CUMULATIVE TOTAL OF 7.5 GRAMS PER HOUR FOR ALL DEVICES. MASONRY FIREPLACES SHALL HAVE EITHER AN EPA CERTIFIED PHASE II WOOD BURNING DEVICE OR SHALL BE A U.L. LISTED DECORATIVE GAS APPLIANCE.
3. IN COMPLIANCE WITH DISTRICT RULE 5014, AN AUTHORITY TO CONSTRUCT (ATC) PERMIT MUST BE OBTAINED FROM THE DISTRICT FOR ANY STATIONARY SOURCES OR PROCESSES (E.G., CERTAIN TYPES OF ENGINES, BACK-UP GENERATORS, BOILERS, HEATERS, ETC.) CONSISTING OF 1) ANY ENGINE GREATER THAN 50 BRAKE HORSEPOWER, 2) ANY BOILER THAT PRODUCES HEAT IN EXCESS OF 1,000,000 BTU PER HOUR, OR 3) ANY EQUIPMENT OR PROCESS WHICH DISCHARGES 2 POUNDS PER DAY OR MORE OF POLLUTANTS (CALIFORNIA HEALTH & SAFETY CODE § 39013).

1. PLAN GENERATED FROM TOPOGRAPHIC SURVEY BY ANDREGG GEOMATICS, INC.
2. ALL DISTURBED AREAS WILL BE REVEGETATED WITH THE TRPA APPROVED FOREST UNDERSTORY SEED MIXTURE AND ALL AREAS OF EXPOSED SOIL WILL BE STABILIZED WITH PINE STRAW OR MULCH PRIOR TO SUBMITTING FOR FINAL RELEASE."
3. ALL BARE SOIL AREAS NEED TO BE PROTECTED EITHER WITH A MULCH, PROTECT WITH ADDITIONAL VEGETATION OR PROTECTED USING A COMBINATION OF BOTH. USE NONCOMBUSTIBLE MULCH NEXT TO FOUNDATIONS OF RESIDENCES AND UNDER DECKS AND BUILDING OVERHANGS.
4. ALL SPOIL PILES SHALL BE PROTECTED DURING CONSTRUCTION THROUGH THE USE OF EITHER FILTER FABRIC FENCING OR FIBER ROLLS AROUND THE PERIMETER OF THE PILES AND A PLASTIC OR OTHER IMPERVIOUS COVERING.
5. THE TOP 6" OF TOPSOIL FROM DISTURBED AREAS SHALL BE SALVAGED AND REUSED ONSITE.

ESTIMATED EARTHWORK

CUT= ~4,800 CY
FILL= ~500 CY

DRAINAGE I.O.D. EASEMENT:
A DRAINAGE I.O.D. WITH THE SAME DESCRIPTION AS THE BLANKET UTILITY EASEMENT WILL BE OFFERED OVER DRAINAGE FEATURES WITH ACCESS TO STATE ROUTE 28.

REV.	DATE	DESCRIPTION	APPROVED	DATE

OWNERS INFORMATION
6980 WEST LAKE, LLC
P.O. Box 430
Rancho Santa Fe, CA 92067

TIESLAU CIVIL ENGINEERING, INC.
3080 NORTH LAKE BLVD
TAHOE CITY, CA 96145
P.O. BOX 412
TAHOE VISTA, CA 96148
ATCIVIL.COM
(530) 546-4805

REGISTERED PROFESSIONAL ENGINEER ADRIAN TIESLAU No. 60323 CIVIL STATE OF CALIFORNIA

CIVIL GRADING PLAN
TAHOE CEDARS

TAHOMA — PLACER COUNTY — CALIFORNIA

COMP:____ DESIGN:
DRWN: PRJ.ENG: AT

PROJECT #: 16.005
SCALE:
HORIZONTAL: N/A
VERTICAL:

DATE: 2-24-17

C3.0

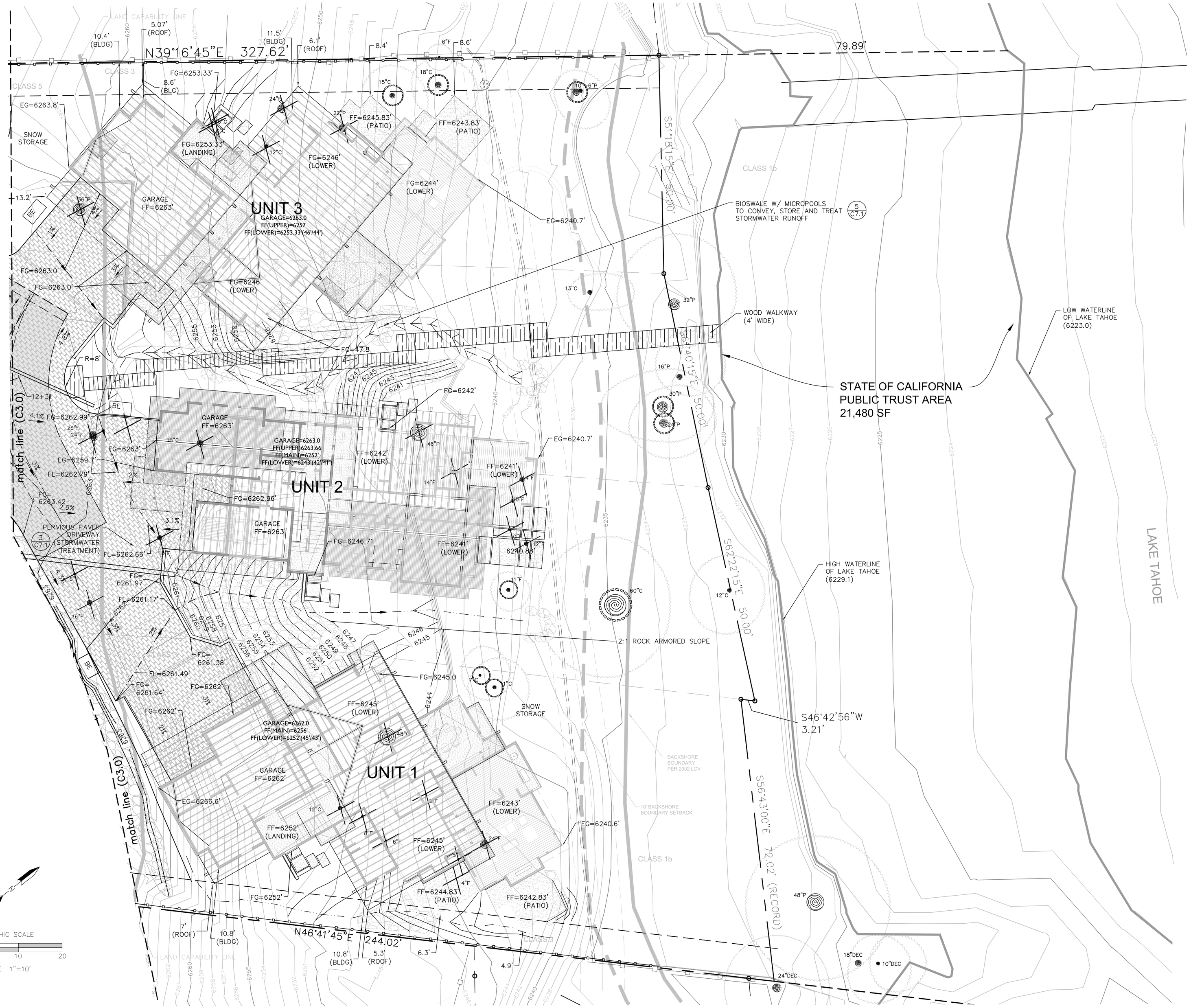

REV.	DATE	DESCRIPTION	APPROVED	DATE

OWNERS INFORMATION
6980 WEST LAKE, LLC
P.O. Box 430
Rancho Santa Fe, CA 92067

TIESLAU CIVIL ENGINEERING, INC.
3080 NORTH LAKE BLVD
TAHOE CITY, CA 96145
P.O. BOX 412
TAHOE VISTA, CA 96148
ATCIVIL.COM
(530) 546-4805

REGISTERED PROFESSIONAL ENGINEER
ADRIAN TIESLAU
No. 60323
CIVIL
STATE OF CALIFORNIA

CIVIL GRADING PLAN
TAHOE CEDARS

TAHOMA — PLACER COUNTY — CALIFORNIA

COMP: ____ DESIGN:
DRWN: PR.J.ENG: AT

PROJECT #: 16.005
SCALE:
HORIZONTAL: N/A
VERTICAL:

DATE: 2-24-17

C3.1

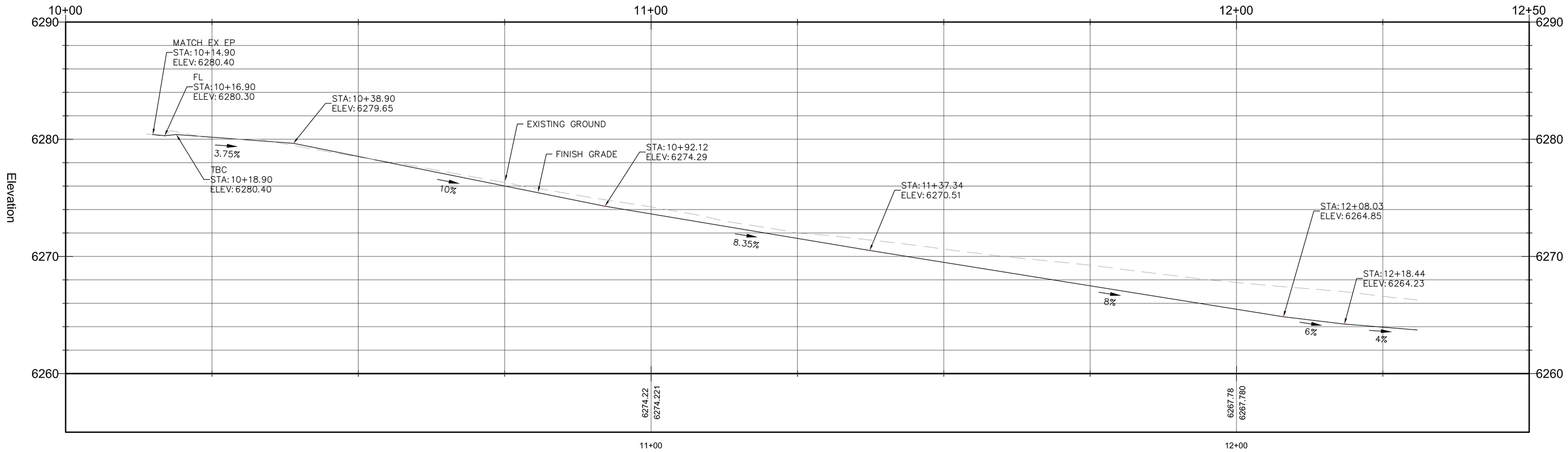

Prop Road CL PROFILE
SCALE:
HORIZONTAL 1"=10' VERTICAL 1"=5'

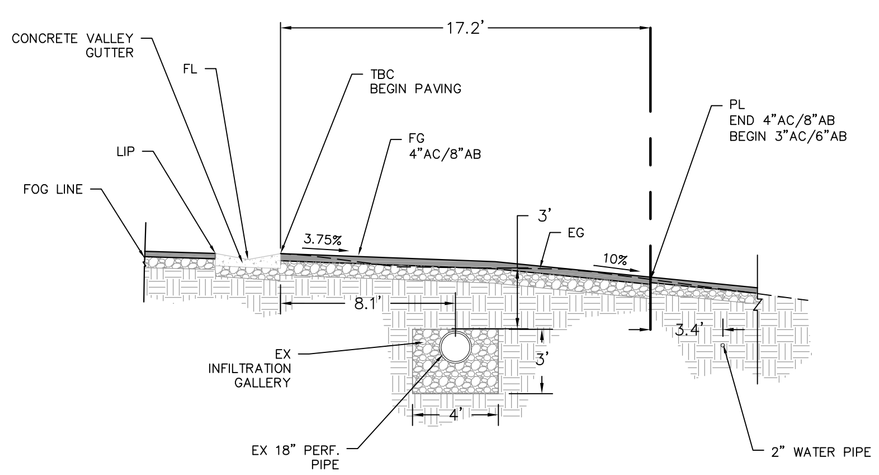

PROPOSED DRIVEWAY (IN ROW)
CL PROFILE
1"=5'

REV.	DATE	DESCRIPTION	APPROVED	DATE

OWNERS INFORMATION
6980 WEST LAKE, LLC
P.O. Box 430
Rancho Santa Fe, CA 92067

TIESLAU
CIVIL
ENGINEERING, INC.
3080 NORTH LAKE BLVD
TAHOE CITY, CA 96145
P.O. BOX 412
TAHOE VISTA, CA 96148
ATCIVIL.COM
(530) 546-4805

REGISTERED PROFESSIONAL ENGINEER
ADRIAN TIESLAU
No. 60323
CIVIL
STATE OF CALIFORNIA

CIVIL PROFILES/SECTIONS
TAHOE CEDARS
TAHOMA PLACER COUNTY CALIFORNIA

COMP:____ DESIGN:
DRWN: PRJ.ENG: AT

PROJECT #: 16.005
SCALE:
HORIZONTAL: N/A
VERTICAL:

DATE: 2-24-17

C3.2

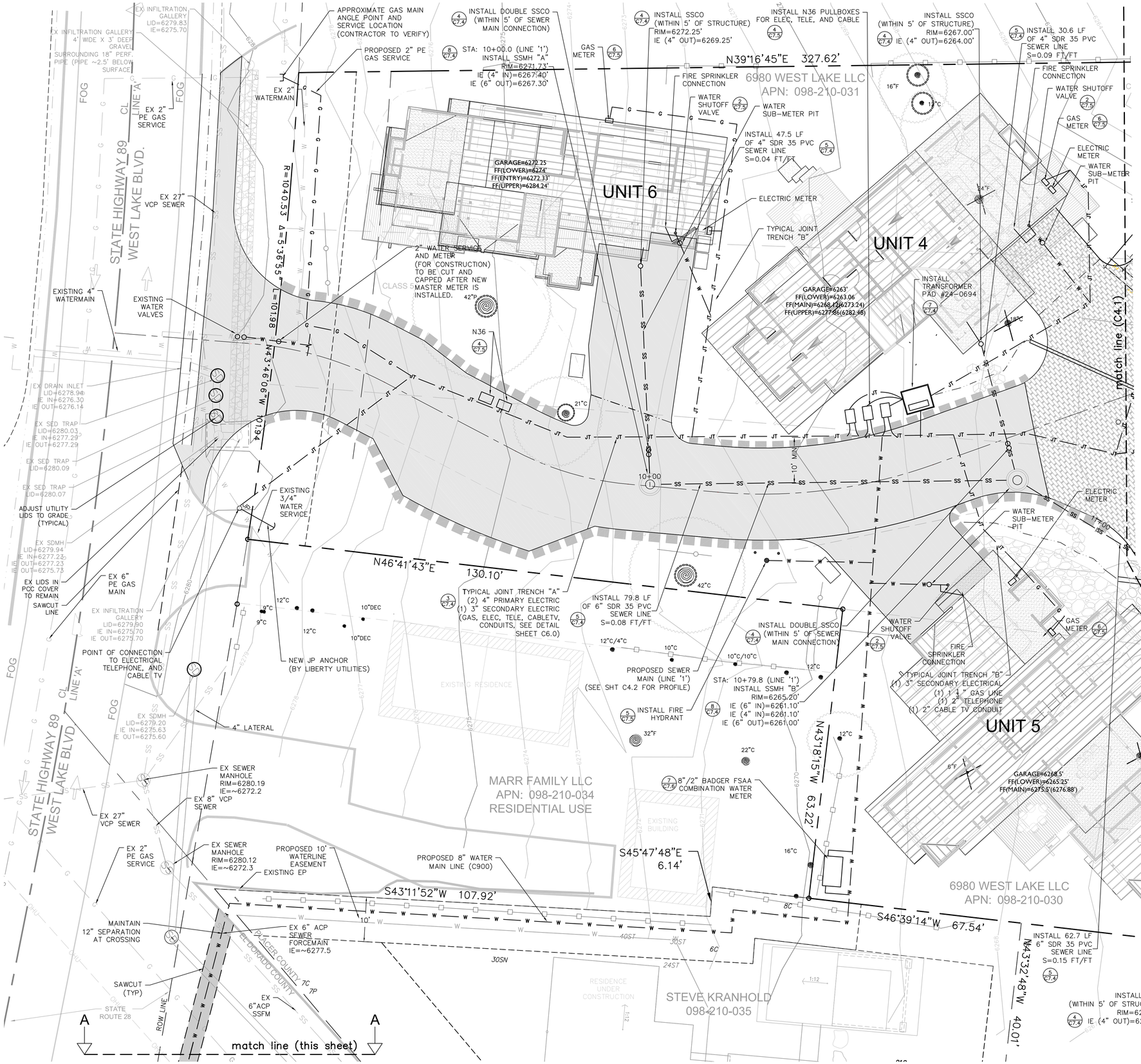

NOTE:
BLANKET EASEMENT PROPOSED OVER COMMON AREA FROM SR89 TO LINE 'C' (SHT C4.1) FOR INGRESS/EGRESS AND UTILITIES (WATER, SEWER, ELECTRIC, TELEPHONE, AND CABLE TV).

WATER NOTES:
1. EFFECTIVE 1/1/18, INDIVIDUAL HOMES AND IRRIGATION WILL BE REQUIRED TO BE SEPARATELY SUB-METERED. METER PITS WITH METER IDLERS SHALL BE INSTALLED AT EACH UNIT AND IRRIGATION CONNECTION AS A PART OF THIS PROJECT. METERS WILL BE INSTALLED IN THE FUTURE WHEN REQUIRED.

2. THE CONNECTION POINT OF EACH HOME'S FIRE SPRINKLER SYSTEM MUST BE DOWNSTREAM OF EACH HOME'S SUB-METER.

3. BACKFLOW PROTECTION IS REQUIRED AT THE CONNECTION POINT OF EACH HAZARD (FIRE SYSTEM, IRRIGATION SYSTEM, BOILER, ETC.)

REV.	DATE	DESCRIPTION	APPROVED	DATE

OWNERS INFORMATION
6980 WEST LAKE, LLC
P.O. Box 430
Rancho Santa Fe, CA 92067

TIESLAU CIVIL ENGINEERING, INC.
3080 NORTH LAKE BLVD
TAHOE CITY, CA 96145
P.O. BOX 412
TAHOE VISTA, CA 96148
ATCIVIL.COM
(530) 546-4805

REGISTERED PROFESSIONAL ENGINEER ADRIAN TIESLAU No. 60323 CIVIL STATE OF CALIFORNIA

CIVIL UTILITY PLAN
TAHOE CEDARS

TAHOMA — PLACER COUNTY — CALIFORNIA

COMP: DESIGN:
DRWN: PRJ.ENG: AT

PROJECT #: 16.005
SCALE:
HORIZONTAL: N/A
VERTICAL:

DATE: 2-24-17

C4.0

NOTE:
BLANKET EASEMENT PROPOSED OVER COMMON AREA FROM SR89 TO LINE 'C' (SHT C4.1) FOR INGRESS/EGRESS AND UTILITIES (WATER, SEWER, ELECTRIC, TELEPHONE, AND CABLE TV).

REV.	DATE	DESCRIPTION	APPROVED	DATE

OWNERS INFORMATION
6980 WEST LAKE, LLC
P.O. Box 430
Rancho Santa Fe, CA 92067

TIESLAU CIVIL ENGINEERING, INC.
3080 NORTH LAKE BLVD
TAHOE CITY, CA 96145
P.O. BOX 412
TAHOE VISTA, CA 96148
ATCIVIL.COM
(530) 546-4805

REGISTERED PROFESSIONAL ENGINEER
ADRIAN TIESLAU
No. 60323
CIVIL
STATE OF CALIFORNIA

CIVIL UTILITY PLAN
TAHOE CEDARS

TAHOMA — PLACER COUNTY — CALIFORNIA

COMP:____ DESIGN:
DRWN: PRJ.ENG: AT

PROJECT #: 16.005
SCALE:
HORIZONTAL: N/A
VERTICAL:

DATE: 2-24-17

C4.1

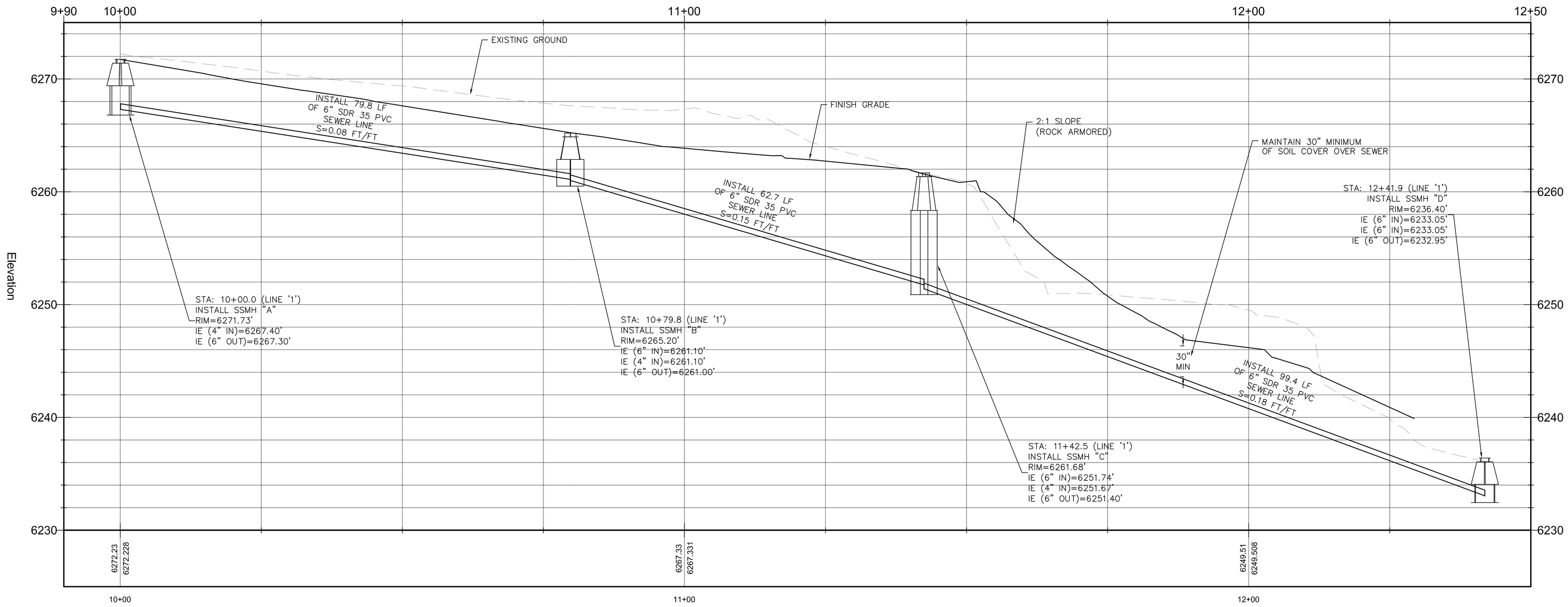

PROPOSED SEWER MAIN - LINE '1' PROFILE
SCALE:
HORIZONTAL 1"=10' VERTICAL 1"=5'

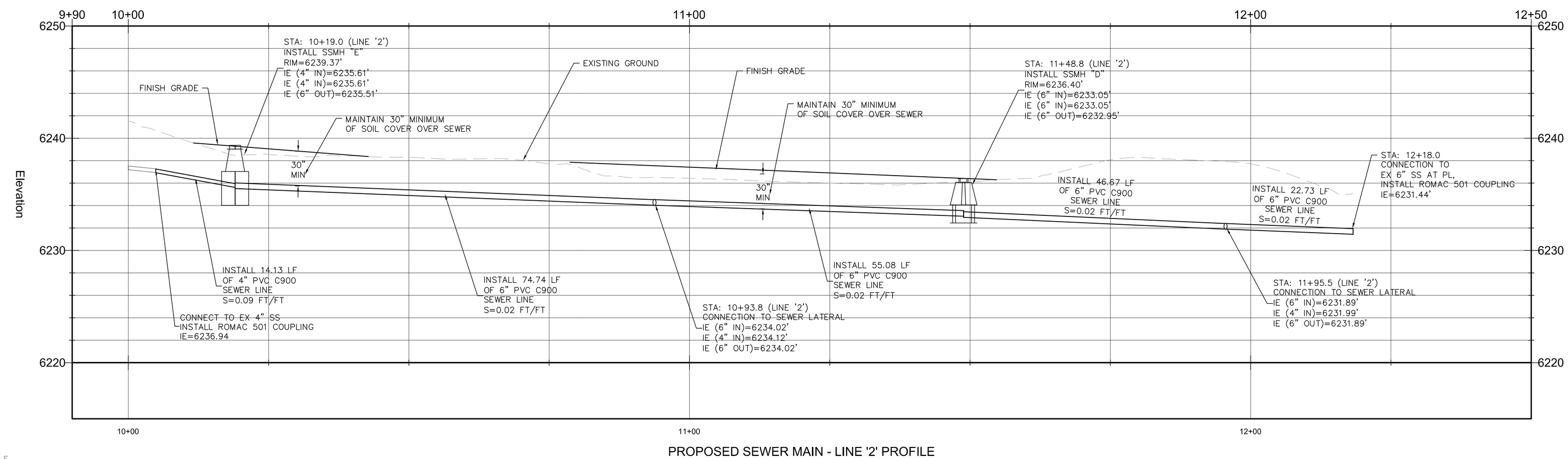

PROPOSED SEWER MAIN - LINE '2' PROFILE
SCALE:
HORIZONTAL 1"=10' VERTICAL 1"=5'

GRAPHIC SCALE
−5 0 5 10 20
SCALE 1"=10'

REV.	DATE	DESCRIPTION	APPROVED	DATE

OWNERS INFORMATION
6980 WEST LAKE, LLC
P.O. Box 430
Rancho Santa Fe, CA 92067

TIESLAU CIVIL ENGINEERING, INC.
3080 NORTH LAKE BLVD
TAHOE CITY, CA 96145
P.O. BOX 412
TAHOE VISTA, CA 96148
ATCIVIL.COM
(530) 546-4805

REGISTERED PROFESSIONAL ENGINEER
ADRIAN TIESLAU
No. 60323
CIVIL
STATE OF CALIFORNIA

CIVIL UTILITY PROFILES
TAHOE CEDARS
TAHOMA PLACER COUNTY CALIFORNIA

COMP:____ DESIGN:
DRWN: PRJ.ENG: AT
PROJECT #: 16.005
SCALE:
HORIZONTAL: N/A
VERTICAL:
DATE: 2-24-17

C4.2

BMP Calculation Spreadsheet

Estimated Soil Erosion Savings of 37.3 pounds per year by doing your BMPs.

Soil erosion is estimated by the treatement volume multiplied by a 250 mg/l concentration plus contributions of source control and deck treatments calculated with the USLE.

Property Address: 6980 W LAKE BLVD
(Start here) APN: 098-210-031 — APN lookup
Date: 6/7/16
Designed By: GLL

MAP DATA — **Water Table:** 51in. — **Restriction:** Duripan at 43in. — **Max. Depth of Install:** 31 in. — **Map Unit:** 7525

ON-SITE DEPTHS

Total Drain Rock Quantity (yd^3) 14.2
Total Runoff (ft^3) 286.8 **Amount Treated** 286.8
Total Excavation (yd^3) 17.1

Treatment Label	Prefab Dimensions		Overall Dimensions	
Prefab Type	Length (ft.) or Cubic Inches	4.0	Length (ft.) or Cubic Inches	6.0
	Width (in.) or Cross Sectional Area (in^2)	24	Width (in.) or Cross Sectional Area (in^2)	48
	Depth (in.) or # of Units	24	Depth (in.)	30
	Prefab Void %	95%	Average Void %	**55%**

Treatment Label	Prefab Dimensions		Overall Dimensions	
Prefab Type	Length (ft.) or Cubic Inches	8.0	Length (ft.) or Cubic Inches	10.0
	Width (in.) or Cross Sectional Area (in^2)	48	Width (in.) or Cross Sectional Area (in^2)	72
	Depth (in.) or # of Units	24	Depth (in.)	30
	Prefab Void %	95%	Average Void %	**63%**

Contributing Surface	A	B	C	D	E	F	G
# of Stories	0	0	0	0	0	0	0
Length (ft.)	1	1	1	1	1	1	1
Width (ft.)	1442	298	60	155	124	189	1174
Area (ft2)							
Area (ft^2)	1442	298	60	155	124	189	1174
Runoff (ft^3)	**120.2**	**24.8**	**5.0**	**12.9**	**10.3**	**15.8**	**97.8**
Treatment Label:	**A**	**B**	**C**	**D**	**E**	**F**	**G**
Length (ft.)	40.0	6.0	3.0	37.0	3.0	4.0	10.0
Width (in.)	36	48	36	12	36	36	72
Depth (in.)	18	30	8	6	24	30	30
On-Site Ksat ($^{in}/_{hr}$)							
mapped Ksat ($^{in}/_{hr}$)	4.0	4.0	4.0	4.0	4.0	4.0	4.0
Prefab Void Space (%)		95%					95%
Average Void Space (%)	40%	55%	40%	40%	40%	40%	63%
Effective Volume (yd^3)	6.7	2.2	0.2	0.7	0.7	1.1	5.6
Treatment Capacity (ft^3)	**124.9**	**44.2**	**5.8**	**23.7**	**11.5**	**18.2**	**119.9**
Drain Rock Quantity (yd^3)	6.7	1.6	0.2	0.7	0.7	1.1	3.2
Excess Runoff (ft^3)	**0.0**	**0.0**	**0.0**	**0.0**	**0.0**	**0.0**	**0.0**
Excess Capacity (ft^3)	**4.7**	**19.4**	**0.8**	**10.8**	**1.2**	**2.4**	**22.0**

UNIT 6 BMP CALCS

BMP Calculation Spreadsheet

Estimated Soil Erosion Savings of 37.5 pounds per year by doing your BMPs.

Soil erosion is estimated by the treatement volume multiplied by a 250 mg/l concentration plus contributions of source control and deck treatments calculated with the USLE.

Property Address: 6980 W LAKE BLVD
(Start here) APN: 098-210-030 — APN lookup
Date: 6/7/16
Designed By: GLL

MAP DATA — **Water Table:** 51in. — **Restriction:** Duripan at 43in. — **Max. Depth of Install:** 31 in. — **Map Unit:** 7525

ON-SITE DEPTHS

Total Drain Rock Quantity (yd^3) 12.7
Total Runoff (ft^3) 288.4 **Amount Treated** 288.4
Total Excavation (yd^3) 14.9

Treatment Label	Prefab Dimensions		Overall Dimensions	
Prefab Type	Length (ft.) or Cubic Inches	4.0	Length (ft.) or Cubic Inches	6.0
	Width (in.) or Cross Sectional Area (in^2)	24	Width (in.) or Cross Sectional Area (in^2)	48
	Depth (in.) or # of Units	24	Depth (in.)	30
	Prefab Void %	95%	Average Void %	**55%**

Contributing Surface	A	B	C	D	E
# of Stories	0	0	0	0	0
Length (ft.)	1	1	1	1	1
Width (ft.)	339	522	1527	171	902
Area (ft2)					
Area (ft^2)	339	522	1527	171	902
Runoff (ft^3)	**28.3**	**43.5**	**127.3**	**14.3**	**75.2**
Treatment Label:	**A**	**B**	**C**	**D**	**E**
Length (ft.)	6.0	20.0	42.0	23.0	16.0
Width (in.)	48	30	36	12	48
Depth (in.)	30	14	18	6	24
On-Site Ksat ($^{in}/_{hr}$)					
mapped Ksat ($^{in}/_{hr}$)	4.0	4.0	4.0	4.0	4.0
Prefab Void Space (%)	95%				
Average Void Space (%)	55%	40%	40%	40%	40%
Effective Volume (yd^3)	2.2	2.2	7.0	0.4	4.7
Treatment Capacity (ft^3)	**44.2**	**45.0**	**131.2**	**14.7**	**79.4**
Drain Rock Quantity (yd^3)	1.6	2.2	7.0	0.4	4.7
Excess Runoff (ft^3)	**0.0**	**0.0**	**0.0**	**0.0**	**0.0**
Excess Capacity (ft^3)	**16.0**	**1.5**	**3.9**	**0.5**	**4.3**

UNIT 5 BMP CALCS

BMP Calculation Spreadsheet

Estimated Soil Erosion Savings of 31.7 pounds per year by doing your BMPs.

Soil erosion is estimated by the treatement volume multiplied by a 250 mg/l concentration plus contributions of source control and deck treatments calculated with the USLE.

Property Address: 6980 W LAKE BLVD
(Start here) APN: 098-210-031 — APN lookup
Date: 6/7/16
Designed By: GLL

MAP DATA — **Water Table:** 51in. — **Restriction:** Duripan at 43in. — **Max. Depth of Install:** 31 in. — **Map Unit:** 7525

ON-SITE DEPTHS

Total Drain Rock Quantity (yd^3) 13.7
Total Runoff (ft^3) 243.6 **Amount Treated** 243.6
Total Excavation (yd^3) 14.9

Treatment Label	Prefab Dimensions		Overall Dimensions	
Prefab Type	Length (ft.) or Cubic Inches	6.0	Length (ft.) or Cubic Inches	8.0
	Width (in.) or Cross Sectional Area (in^2)	24	Width (in.) or Cross Sectional Area (in^2)	48
	Depth (in.) or # of Units	24	Depth (in.)	30
	Prefab Void %	95%	Average Void %	**57%**

Treatment Label	Prefab Dimensions		Overall Dimensions	
Prefab Type	Length (ft.) or Cubic Inches	2.0	Length (ft.) or Cubic Inches	4.0
	Width (in.) or Cross Sectional Area (in^2)	24	Width (in.) or Cross Sectional Area (in^2)	48
	Depth (in.) or # of Units	24	Depth (in.)	30
	Prefab Void %	95%	Average Void %	**51%**

Contributing Surface	A	B	C	D	E
# of Stories	0	0	0	0	0
Length (ft.)	1	1	1	1	1
Width (ft.)	1791	163	551	184	234
Area (ft2)					
Area (ft^2)	1791	163	551	184	234
Runoff (ft^3)	**149.3**	**13.6**	**45.9**	**15.3**	**19.5**
Treatment Label:	**A**	**B**	**C**	**D**	**E**
Length (ft.)	30.0	30.0	8.0	26.0	4.0
Width (in.)	42	12	48	12	48
Depth (in.)	30	3	30	6	30
On-Site Ksat ($^{in}/_{hr}$)					
mapped Ksat ($^{in}/_{hr}$)	4.0	4.0	4.0	4.0	4.0
Prefab Void Space (%)			95%		95%
Average Void Space (%)	40%	40%	57%	40%	51%
Effective Volume (yd^3)	9.7	0.3	3.0	0.5	1.5
Treatment Capacity (ft^3)	**156.3**	**14.6**	**60.6**	**16.7**	**27.9**
Drain Rock Quantity (yd^3)	9.7	0.3	2.0	0.5	1.2
Excess Runoff (ft^3)	**0.0**	**0.0**	**0.0**	**0.0**	**0.0**
Excess Capacity (ft^3)	**7.0**	**1.0**	**14.7**	**1.3**	**8.4**

UNIT 4 BMP CALCS

BMP Calculation Spreadsheet

Estimated Soil Erosion Savings of 58.6 pounds per year by doing your BMPs.

Soil erosion is estimated by the treatement volume multiplied by a 250 mg/l concentration plus contributions of source control and deck treatments calculated with the USLE.

Property Address: 6980 W LAKE BLVD
(Start here) APN: 098-210-031 — APN lookup
Date: 6/7/16
Designed By: GLL

MAP DATA — **Water Table:** 51in. — **Restriction:** Duripan at 43in. — **Max. Depth of Install:** 31 in. — **Map Unit:** 7525

ON-SITE DEPTHS

Total Drain Rock Quantity (yd^3) 16.8
Total Runoff (ft^3) 450.8 **Amount Treated** 450.8
Total Excavation (yd^3) 18.6

Treatment Label	Prefab Dimensions		Overall Dimensions	
Prefab Type	Length (ft.) or Cubic Inches	6.0	Length (ft.) or Cubic Inches	8.0
	Width (in.) or Cross Sectional Area (in^2)	48	Width (in.) or Cross Sectional Area (in^2)	72
	Depth (in.) or # of Units	24	Depth (in.)	30
	Prefab Void %	95%	Average Void %	**62%**

Contributing Surface	A	B	C	D	E	F	G
# of Stories	0	0	0	0	0	0	0
Length (ft.)	1	1	1	1	1	1	1
Width (ft.)	759	1617	1121	758	1154	2286	1728
Area (ft2)							
Area (ft^2)	759	1617	1121	758	1154	2286	1728
Runoff (ft^3)	**63.3**	**134.8**	**93.4**	**63.2**	**96.2**	**190.5**	**144.0**
Treatment Label:	**A**	**B**	**C**	**D**	**E**	**F**	**G**
Length (ft.)	67.0	125.0	8.0	75.0	50.0	2286.0	1728.0
Width (in.)	24	24	72	18	24	12	12
Depth (in.)	6	6	30	6	16	3	3
On-Site Ksat ($^{in}/_{hr}$)						0.0	0.0
mapped Ksat ($^{in}/_{hr}$)	4.0	4.0	4.0	4.0	4.0	4.0	4.0
Prefab Void Space (%)			95%				
Average Void Space (%)	40%	40%	62%	40%	40%	40%	40%
Effective Volume (yd^3)	2.5	4.6	4.4	2.1	4.9	21.2	16.0
Treatment Capacity (ft^3)	**78.5**	**146.5**	**94.7**	**68.0**	**101.1**	**228.6**	**172.8**
Drain Rock Quantity (yd^3)	2.5	4.6	2.7	2.1	4.9	21.2	16.0
Excess Runoff (ft^3)	**0.0**	**0.0**	**0.0**	**0.0**	**0.0**	**0.0**	**0.0**
Excess Capacity (ft^3)	**15.3**	**11.7**	**1.3**	**4.8**	**4.9**	**38.1**	**28.8**

DRIVEWAY BMP CALCS

REV.	DATE	DESCRIPTION	APPROVED	DATE

OWNERS INFORMATION
6980 WEST LAKE, LLC
P.O. Box 430
Rancho Santa Fe, CA 92067

TIESLAU CIVIL ENGINEERING, INC.
3080 NORTH LAKE BLVD
TAHOE CITY, CA 96145
P.O. BOX 412
TAHOE VISTA, CA 96148
ATCIVIL.COM
(530) 546-4805

REGISTERED PROFESSIONAL ENGINEER
ADRIAN TIESLAU
No. 60323
CIVIL
STATE OF CALIFORNIA

BMP PLAN AND CALCULATIONS

TAHOE CEDARS

TAHOMA — PLACER COUNTY — CALIFORNIA

COMP:____ DESIGN:
DRWN: PRJ.ENG: AT

PROJECT #: 16.005
SCALE:
HORIZONTAL: N/A
VERTICAL:

DATE: 2-24-17

C5.0

BMP Calculation Spreadsheet

Estimated Soil Erosion Savings of 38 pounds per year by doing your BMPs. Soil erosion is estimated by the treatement volume multiplied by a 250 mg/l concentration plus contributions of source control and deck treatments calculated with the USLE.

Property Address: 6980 W LAKE BLVD
(Start here) APN: 098-210-030 (APN lookup)
Date: 6/7/16
Designed By: GLL

MAP DATA		ON-SITE DEPTHS			
Water Table:	51in.			**Total Drain Rock Quantity (yd^3)**	11.9
Restriction:	Duripan at 43in.				
Max. Depth of Install:	31 in.	**Map Unit:** 7525	**Total Runoff (ft^2)** 292.2	**Amount Treated**	292.2
				Total Excavation (yd^3)	15.0

Contributing Surface	A	B	C	D	E	F	G	H
# of Stories	0	0	0	0	0	0	0	0
Length (ft.)	1	1	1	1	1	1	1	1
Width (ft.)	509	289	612	113	694	577	501	211
Area (ft2)								
Area (ft^2)	509	289	612	113	694	577	501	211
Runoff (ft^3)	**42.4**	**24.1**	**51.0**	**9.4**	**57.8**	**48.1**	**41.8**	**17.6**
Treatment Label:	**A**	**B**	**C**	**D**	**E**	**F**	**G**	**H**
Length (ft.)	6.0	11.0	8.0	8.0	8.0	19.0	6.0	4.0
Width (in.)	48	30	48	18	48	30	48	48
Depth (in.)	30	18	30	12	30	18	30	30
On-Site Ksat ($^{in}/_{hr}$)								
mapped Ksat ($^{in}/_{hr}$)	4.0	4.0	4.0	4.0	4.0	4.0	4.0	4.0
Prefab Void Space (%)	95%		95%		95%		95%	95%
Average Void Space (%)	55%	40%	57%	40%	57%	40%	55%	51%
Effective Volume (yd^3)	2.2	1.5	3.0	0.4	3.0	2.6	2.2	1.5
Treatment Capacity (ft^3)	**44.2**	**29.2**	**60.6**	**10.5**	**60.6**	**50.5**	**44.2**	**27.9**
Drain Rock Quantity (yd^3)	1.6	1.5	2.0	0.4	2.0	2.6	1.6	1.2
Excess Runoff (ft^3)	**0.0**	**0.0**	**0.0**	**0.0**	**0.0**	**0.0**	**0.0**	**0.0**
Excess Capacity (ft^3)	**1.8**	**5.1**	**9.6**	**1.1**	**2.8**	**2.4**	**2.5**	**10.3**

Treatment Label	Prefab Dimensions		Overall Dimensions	
Prefab Type	Length (ft.)	4.0	Length (ft.)	6.0
	or Cubic Inches		or Cubic Inches	
	Width (in.)	24	Width (in.)	48
	or Cross Sectional Area (in^2)		or Cross Sectional Area (in^2)	
	Depth (in.)	24	Depth (in.)	30
	or # of Units			
	Prefab Void %	95%	Average Void %	**55%**

Treatment Label	Prefab Dimensions		Overall Dimensions	
Prefab Type	Length (ft.)	6.0	Length (ft.)	8.0
	or Cubic Inches		or Cubic Inches	
	Width (in.)	24	Width (in.)	48
	or Cross Sectional Area (in^2)		or Cross Sectional Area (in^2)	
	Depth (in.)	24	Depth (in.)	30
	or # of Units			
	Prefab Void %	95%	Average Void %	**57%**

Treatment Label	Prefab Dimensions		Overall Dimensions	
Prefab Type	Length (ft.)	2.0	Length (ft.)	4.0
	or Cubic Inches		or Cubic Inches	
	Width (in.)	24	Width (in.)	48
	or Cross Sectional Area (in^2)		or Cross Sectional Area (in^2)	
	Depth (in.)	24	Depth (in.)	30
	or # of Units			
	Prefab Void %	95%	Average Void %	**51%**

UNIT 1 AND UNIT 3 BMP CALCS

GRAPHIC SCALE
−5 0 5 10 20
SCALE 1"=10'

BMP Calculation Spreadsheet

Estimated Soil Erosion Savings of 35.5 pounds per year by doing your BMPs. Soil erosion is estimated by the treatement volume multiplied by a 250 mg/l concentration plus contributions of source control and deck treatments calculated with the USLE.

Property Address: 6980 W LAKE BLVD
(Start here) APN: 098-210-031 (APN lookup)
Date: 6/7/16
Designed By: GLL

MAP DATA		ON-SITE DEPTHS			
Water Table:	51in.			**Total Drain Rock Quantity (yd^3)**	10.8
Restriction:	Duripan at 43in.				
Max. Depth of Install:	31 in.	**Map Unit:** 7525	**Total Runoff (ft^2)** 272.9	**Amount Treated**	272.9
				Total Excavation (yd^3)	9.8

Contributing Surface	A	B	C	D	E	F	G	H
# of Stories	0	0	0	0	0	0	0	0
Length (ft.)	1	1	1	1	1	1	1	1
Width (ft.)	185	708	151	175	287	292	1112	365
Area (ft2)								
Area (ft^2)	185	708	151	175	287	292	1112	365
Runoff (ft^3)	**15.4**	**59.0**	**12.6**	**14.6**	**23.9**	**24.3**	**92.7**	**30.4**
Treatment Label:	**A**	**B**	**C**	**D**	**E**	**F**	**G**	**H**
Length (ft.)	20.0	28.0	15.0	14.0	23.5	25.0	46.0	38.0
Width (in.)	36	30	36	18	18	18	30	18
Depth (in.)	0	14	0	8	8	10	12	6
On-Site Ksat ($^{in}/_{hr}$)								
mapped Ksat ($^{in}/_{hr}$)	4.0	4.0	4.0	4.0	4.0	4.0	4.0	4.0
Prefab Void Space (%)								
Average Void Space (%)	40%	40%	40%	40%	40%	40%	40%	40%
Effective Volume (yd^3)	0.0	3.0	0.0	0.5	0.9	1.2	4.3	1.0
Treatment Capacity (ft^3)	**19.8**	**63.0**	**14.9**	**14.6**	**24.5**	**29.5**	**94.2**	**32.6**
Drain Rock Quantity (yd^3)	0.6	3.0	0.4	0.5	0.9	1.2	4.3	1.0
Excess Runoff (ft^3)	**0.0**	**0.0**	**0.0**	**0.0**	**0.0**	**0.0**	**0.0**	**0.0**
Excess Capacity (ft^3)	**4.4**	**4.0**	**2.3**	**0.0**	**0.6**	**5.2**	**1.5**	**2.2**

Treatment Label	Prefab Dimensions		Overall Dimensions	
Prefab Type	Length (ft.)	6.7	Length (ft.)	7.7
	or Cubic Inches		or Cubic Inches	
	Width (in.)	40	Width (in.)	52
	or Cross Sectional Area (in^2)		or Cross Sectional Area (in^2)	
	Depth (in.)	24	Depth (in.)	30
	or # of Units			
	Prefab Void %	95%	Average Void %	**69%**

Treatment Label	Prefab Dimensions		Overall Dimensions	
Prefab Type	Length (ft.)	3.3	Length (ft.)	5.0
	or Cubic Inches		or Cubic Inches	
	Width (in.)	40	Width (in.)	52
	or Cross Sectional Area (in^2)		or Cross Sectional Area (in^2)	
	Depth (in.)	12	Depth (in.)	18
	or # of Units			
	Prefab Void %	95%	Average Void %	**59%**

Treatment Label	Prefab Dimensions		Overall Dimensions	
Prefab Type	Length (ft.)	3.3	Length (ft.)	5.0
	or Cubic Inches		or Cubic Inches	
	Width (in.)	40	Width (in.)	52
	or Cross Sectional Area (in^2)		or Cross Sectional Area (in^2)	
	Depth (in.)	16	Depth (in.)	24
	or # of Units			
	Prefab Void %	95%	Average Void %	**59%**

Treatment Label	Prefab Dimensions		Overall Dimensions	
Prefab Type	Length (ft.)	4.0	Length (ft.)	6.0
	or Cubic Inches		or Cubic Inches	
	Width (in.)	24	Width (in.)	48
	or Cross Sectional Area (in^2)		or Cross Sectional Area (in^2)	
	Depth (in.)	24	Depth (in.)	30
	or # of Units			
	Prefab Void %	95%	Average Void %	**55%**

UNIT 2 BMP CALCS

REV	DATE	DESCRIPTION	APPROVED	DATE

OWNERS INFORMATION
6980 WEST LAKE, LLC
P.O. Box 430
Rancho Santa Fe, CA 92067

TIESLAU CIVIL ENGINEERING, INC.
3080 NORTH LAKE BLVD
TAHOE CITY, CA 96145
P.O. BOX 412
TAHOE VISTA, CA 96148
ATCIVIL.COM
(530) 546-4805

REGISTERED PROFESSIONAL ENGINEER
ADRIAN TIESLAU
No. 60323
CIVIL
STATE OF CALIFORNIA

BMP PLAN AND CALCULATIONS

TAHOE CEDARS

TAHOMA — PLACER COUNTY — CALIFORNIA

COMP: DESIGN:
DRWN: PRJ.ENG: AT

PROJECT #: 16.005
SCALE:
HORIZONTAL: N/A
VERTICAL:

DATE: 2-24-17

C5.1

LEGEND

BE 2 CAN BEAR RESISTANT GARBAGE ENCLOSURE

NOISE

THE CONTRACTOR SHALL INSURE THAT ALL CONSTRUCTION VEHICLES OR EQUIPMENT, FIXED OR MOBILE, OPERATED WITHIN CLOSE PROXIMITY OF A RESIDENTIAL DWELLING SHALL BE EQUIPPED WITH PROPERLY OPERATING AND MAINTAINED MUFFLERS AT ALL TIMES DURING PROJECT CONSTRUCTION. IT IS THE OWNER'S RESPONSIBILITY TO OBTAIN THE SERVICES OF A QUALIFIED ACOUSTICAL PROFESSIONAL TO VERIFY PROPER EQUIPMENT MUFFLERS IF CONCERNS RELATING TO THE ISSUE ARISE.

CONSTRUCTION NOISE EMANATING FROM ANY CONSTRUCTION ACTIVITIES FOR WHICH A GRADING PERMIT IS REQUIRED IS PROHIBITED ON SUNDAYS AND FEDERAL HOLIDAYS, AND SHALL ONLY OCCUR:

a.) MONDAY THROUGH FRIDAY, 6:00 AM TO 8:00 PM (DURING DAYLIGHT SAVINGS)
b) MONDAY THROUGH FRIDAY, 7:00 AM TO 8:00 PM (DURING STANDARD TIME)
c) SATURDAYS, 8:00 AM TO 6:00 PM

IN ADDITION, TEMPORARY SIGNS 4 FEET X 4 FEET SHALL BE LOCATED THROUGHOUT THE PROJECT AS DETERMINED BY THE DEVELOPMENT REVIEW COMMITTEE, AT THE INTERSECTION AND ONE OF THE DRIVEWAY ENCROACHMENTS ABOVE DEPICTING THE ABOVE CONSTRUCTION HOUR LIMITATIONS. SAID SIGNS SHALL INCLUDE A TOLL FREE PUBLIC INFORMATION PHONE NUMBER WHERE SURROUNDING RESIDENTS CAN REPORT VIOLATIONS AND THE DEVELOPER WILL RESPOND AND RESOLVE NOISE VIOLATIONS. THIS CONDITION SHALL BE INCLUDED ON THE IMPROVEMENT PLANS.

ADVISORY COMMENT: ESSENTIALLY, QUIET ACTIVITIES, WHICH DO NOT INVOLVE HEAVY EQUIPMENT OR MACHINERY, MAY OCCUR AT OTHER TIMES. WORK OCCURRING WITHIN AN ENCLOSED BUILDING, SUCH AS A HOUSE UNDER CONSTRUCTION WITH THE ROOF AND SIDING ON, CAN OCCUR AT OTHER TIMES AS WELL. THE PLANNING DIRECTOR IS AUTHORIZED TO WAIVE THE TIME FRAMES BASED ON SPECIAL CIRCUMSTANCES, SUCH AS ADVERSE WEATHER CONDITIONS.

LOW IMPACT DEVELOPMENT (LID) DESIGN PLAN

LOW IMPACT DEVELOPMENT (LIDS) PRACTICES WILL BE INCORPORATED INTO THE SITE DESIGN AND CONSTRUCTION. LID PRINCIPLES ARE MODELED AFTER NATURE TO MANAGE URBAN RUNOFF AT THE SOURCE USING LOCAL AND SMALL CONTROLS THAN TRADITIONAL CENTRALIZED STORMWATER TREATMENT. THE GOAL OF LID IS TO MIMIC THE PREDEVELOPMENT HYDROLOGY OF A SITE BY USING DESIGN PRACTICES AND TECHNIQUES THAT EFFECTIVELY CAPTURE, FILTER, STORE, EVAPORATE, DETAIN AND INFILTRATE RUNOFF CLOSE TO ITS SOURCE. SITE DESIGN FEATURES CAN ACCOMPLISH THESE GOALS BY DIRECTING RUNOFF TO VEGETATED AREA, PROTECTING NATIVE VEGETATION AND OPEN SPACE, AND REDUCING THE AMOUNT OF HARD SURFACES AND SOIL COMPACTION. LID ADDRESSES STORMWATER THROUGH SMALL, COST-EFFECTIVE LANDSCAPE FEATURES AT THE LOCAL LEVEL. LID IS A VERSATILE APPROACH THAT INCLUDES BOTH SOURCE CONTROLS, STRUCTURAL TREATMENT CONTROLS, AND STRUCTURAL TREATMENT CONTROLS EQUALLY WELL TO THE REDEVELOPMENT PROJECT.

1. PLAN GENERATED FROM TOPOGRAPHIC SURVEY BY ANDREGG GEOMATICS, INC.
2. ALL DISTURBED AREAS WILL BE REVEGETATED WITH THE TRPA APPROVED FOREST UNDERSTORY SEED MIXTURE AND ALL AREAS OF EXPOSED SOIL WILL BE STABILIZED WITH PINE STRAW OR MULCH PRIOR TO SUBMITTING FOR FINAL RELEASE.
3. ALL BARE SOIL AREAS NEED TO BE PROTECTED EITHER WITH A MULCH, PROTECT WITH ADDITIONAL VEGETATION OR PROTECTED USING A COMBINATION OF BOTH. USE NONCOMBUSTIBLE MULCH NEXT TO FOUNDATIONS OF RESIDENCES AND UNDER DECKS AND BUILDING OVERHANGS.
4. ALL SPOIL PILES SHALL BE PROTECTED DURING CONSTRUCTION THROUGH THE USE OF EITHER FILTER FABRIC FENCING OR FIBER ROLLS AROUND THE PERIMETER OF THE PILES AND A PLASTIC OR OTHER IMPERVIOUS COVERING.
5. THE TOP 6" OF TOPSOIL FROM DISTURBED AREAS SHALL BE SALVAGED AND REUSED ONSITE.

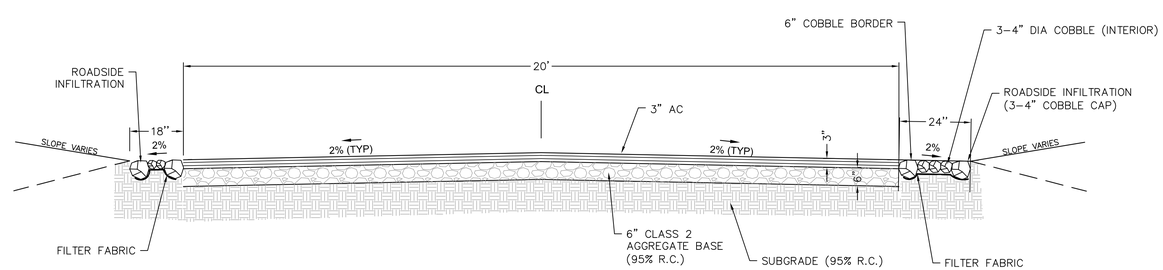

TYPICAL DRIVEWAY SECTION
NOT TO SCALE

REV.	DATE	DESCRIPTION	APPROVED	DATE

OWNERS INFORMATION
6980 WEST LAKE, LLC
P.O. Box 430
Rancho Santa Fe, CA 92067

TIESLAU CIVIL ENGINEERING, INC.
3080 NORTH LAKE BLVD
TAHOE CITY, CA 96145
P.O. BOX 412
TAHOE VISTA, CA 96148
ATCIVIL.COM
(530) 546-4805

REGISTERED PROFESSIONAL ENGINEER ADRIAN TIESLAU No. 60323 CIVIL STATE OF CALIFORNIA

FIRE TURN-AROUND EXHIBIT
TAHOE CEDARS

TAHOMA PLACER COUNTY CALIFORNIA

COMP:____ DESIGN:
DRWN: PRJ.ENG: AT

PROJECT #: 16.005
SCALE:
HORIZONTAL: N/A
VERTICAL:

DATE: 2-24-17

C6.0

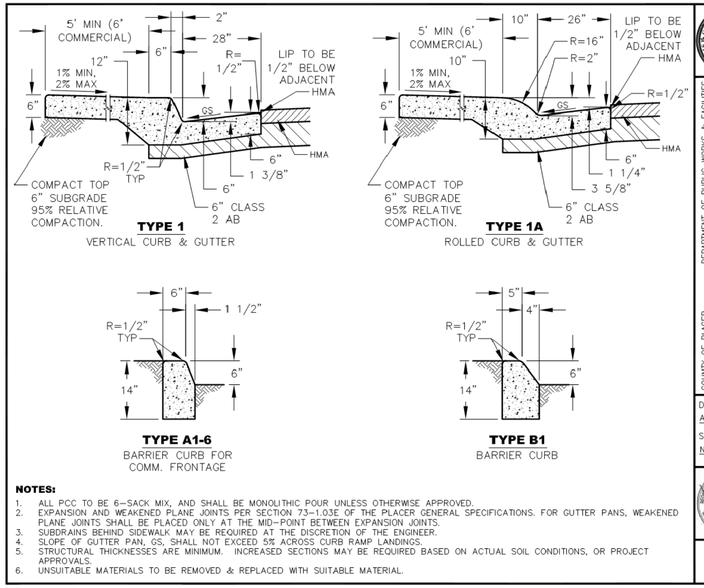

6 C7.0 PLACER COUNTY CONCRETE CURBS AND GUTTERS DETAILS
N.T.S

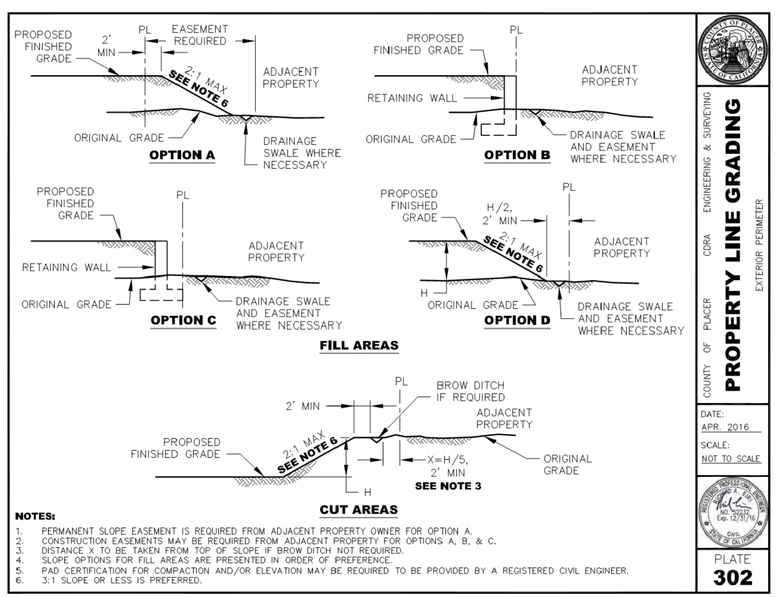

7 C7.0 PLACER COUNTY PROPERTY LINE GRADING DETAILS
N.T.S

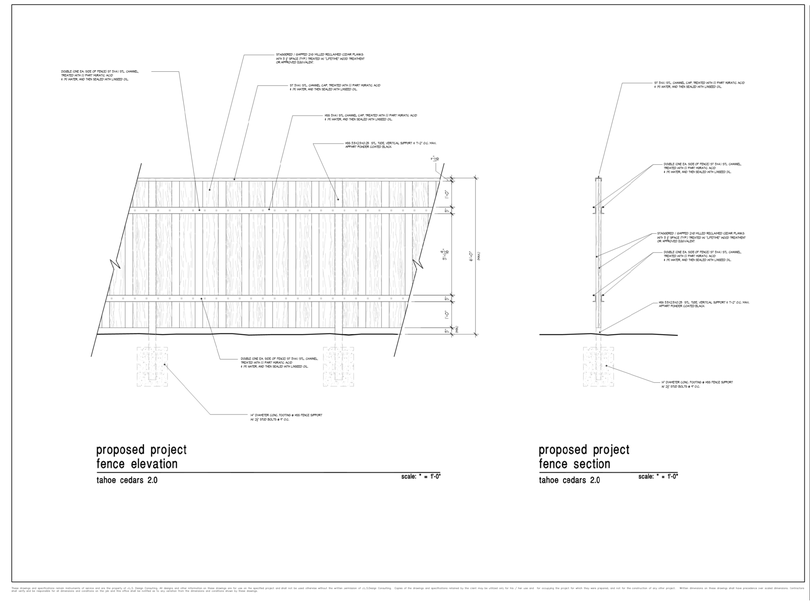

2 C7.0 WOOD FENCE AT GRADE
N.T.S

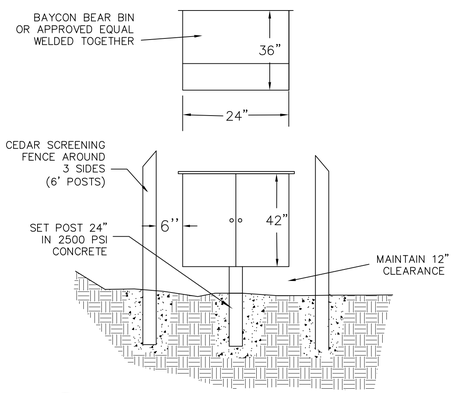

1 C7.0 BEAR PROOF TRASH ENCLOSURE - 2 CAN
N.T.S

NOTE: ENSURE 1% MINIMUM LONGITUDINAL SLOPE AND ENSURE SWALE BOTTOM IS BELOW THE LOW SIDE OF SWALE TO ENSURE FLOW DOESN'T BYPASS SWALE

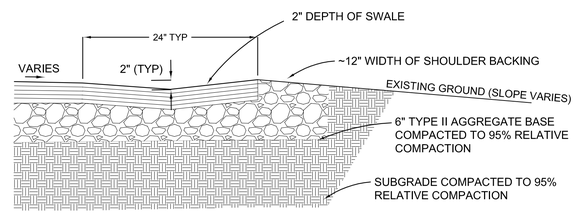

3 C7.0 AC SWALE DETAIL
N.T.S

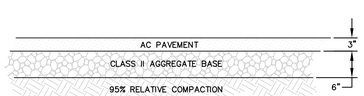

4 C7.0 ASPHALT PAVEMENT SECTION
N.T.S

NOTES:
1. ENSURE GUTTER BOTTOM IS BELOW THE LOW SIDE OF GUTTER TO ENSURE FLOW DOESN'T BYPASS GUTTER
2. PCC SHALL CONFORM TO SECTION 90-2 OF CALTRANS STANDARD SPECIFICATIONS

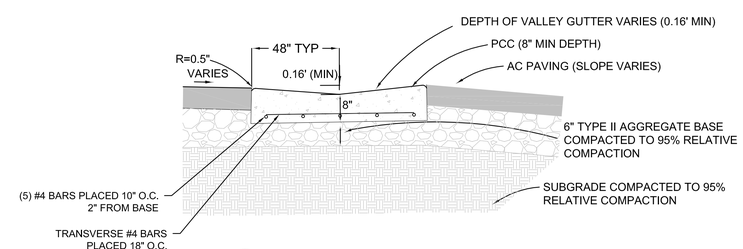

5 C7.0 CONCRETE VALLEY GUTTER
N.T.S

J.L.S Design
Consultants:
Owner:
6980 wb, llc.
p.o. box 124
tahoe city, ca 96145
530.362.0501
Legal Description:
Project:
tahoe cedars 2.0 common area general improvements
6980 west lake blvd.
tahoma, ca 96142
not for construction
design development
proposed site fence schematic elevation & section
a7.1

REV.	DATE	DESCRIPTION	APPROVED	DATE

OWNERS INFORMATION
6980 WEST LAKE, LLC
P.O. Box 430
Rancho Santa Fe, CA 92067

TIESLAU CIVIL ENGINEERING, INC.
3080 NORTH LAKE BLVD
TAHOE CITY, CA 96145
P.O. BOX 412
TAHOE VISTA, CA 96148
ATCIVIL.COM
(530) 546-4805

CIVIL DETAILS
TAHOE CEDARS
PLACER COUNTY CALIFORNIA
TAHOMA

COMP: DESIGN:
DRWN: PRJ.ENG: AT
PROJECT #: 16.005
SCALE: HORIZONTAL: N/A VERTICAL:
DATE: 2-24-17

C7.0

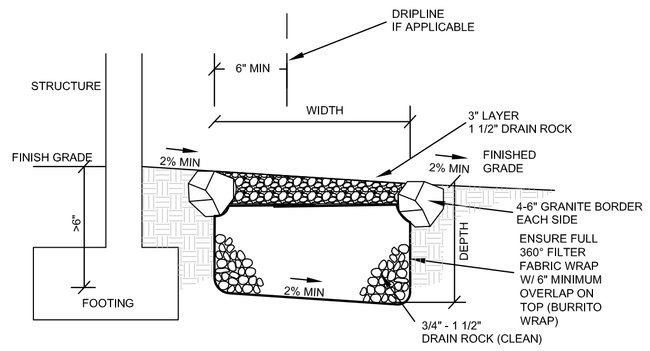

1 C7.1 DRIPLINE INFILTRATION TRENCH
N.T.S

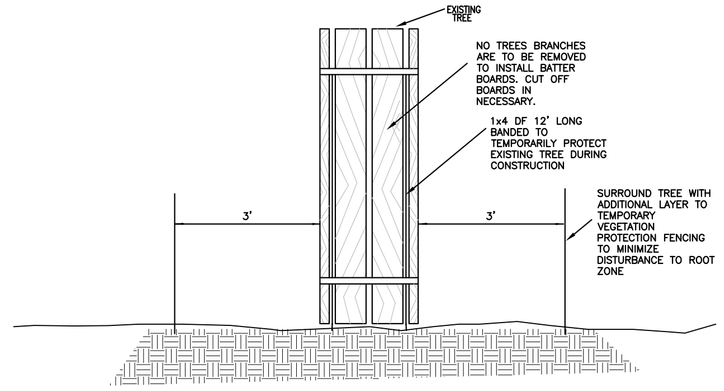

4 C7.1 TREE PROTECTION FOR CONSTRAINED CONSTRUCTION AREAS
N.T.S

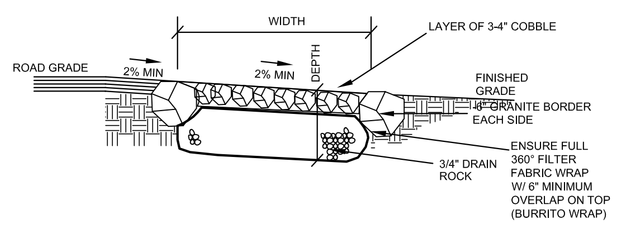

2 C7.1 INFILTRATION TRENCH NEAR EDGE OF PAVEMENT
N.T.S

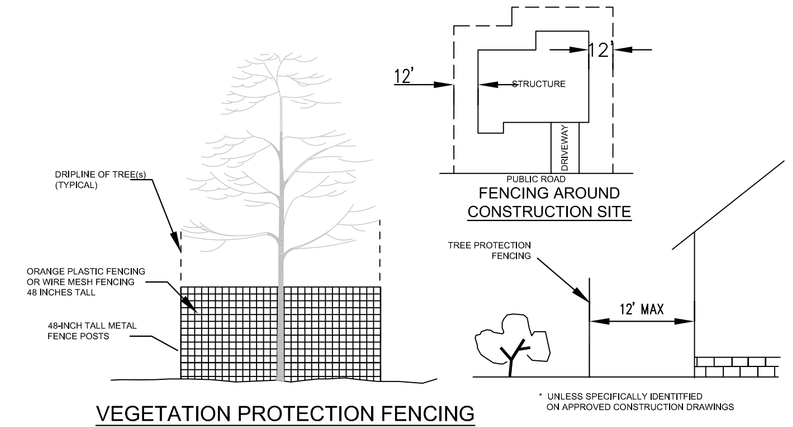

1. DUST CONTROL PRACTICES ARE REQUIRED FOR ANY GRADING ACTIVITY AND ARE APPLICABLE TO MOST CONSTRUCTION SITES. ALL EXPOSED AREAS OF THE APPROVED CONSTRUCTION SITE SHALL BE MULCHED WITH A 2 TO 3 INCH LAYER OF PINE NEEDLES OR WOOD CHIPS. MULCHING TO A DEPTH, WHICH APPROACHES OR EXCEEDS 4 INCHES NEGATIVELY EFFECTS SOIL PROPERTIES AND CAN INHIBIT REVEGETATION. STRAW MULCH WILL NOT BE ACCEPTABLE. OTHER TECHNIQUES SUCH AS EROSION CONTROL BLANKETS CAN BE SUBSTITUTED FOR MULCH IF THEY ARE INSTALLED AND MAINTAINED ACCORDING TO MANUFACTURERS SPECIFICATIONS.

2. FENCING OF "NON-APPROVED" CONSTRUCTION AREAS SHALL BE SPECIFIED TO BE AT LEAST 48 INCHES HIGH AND SHALL BE CONSTRUCTED OF METAL POSTS AND EITHER ORANGE CONSTRUCTION FENCING OR METAL MESH FENCING ALSO AT LEAST 48 INCHES HIGH.

3. NO MATERIAL OR EQUIPMENT SHALL ENTER OR BE PLACED IN THE AREAS PROTECTED BY FENCING OR OUTSIDE THE APPROVED CONSTRUCTION AREA WITHOUT PRIOR APPROVAL.

4. TO REDUCE SOIL DISTURBANCE AND DAMAGE TO VEGETATION, THE AREA OF DISTURBANCE DURING THE CONSTRUCTION OF A STRUCTURE SHALL BE LIMITED TO THE AREA BETWEEN THE FOOTPRINT OF THE BUILDING AND THE PUBLIC ROAD. FOR THE REMAINDER OF THE SITE, THE DISTURBANCE AREA SHALL NOT EXCEED 12 FEET FROM THE FOOTPRINT OF THE STRUCTURE, PARKING AREA OR CUT/FILL SLOPE. THIS FENCING SHALL BE CLEARLY SHOWN ON THE APPROVED PLANS. ALL CHANGES OR EXCEPTIONS SHALL BE SHOWN ON A REVISED SET OF PLANS FOR APPROVAL. ANY "IN-THE-FIELD" CHANGES SHALL BE APPROVED BY THE ENGINEER.

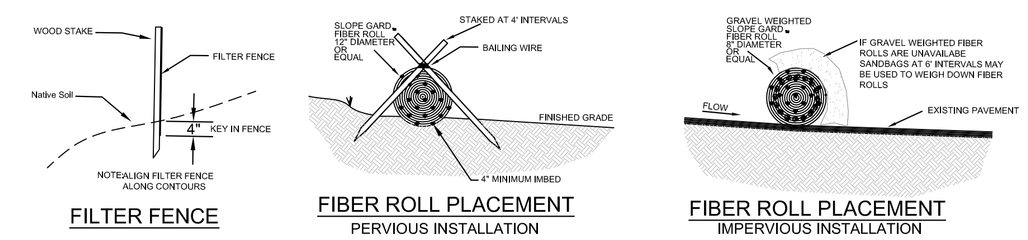

6 C7.1 SOIL PROTECTION DETAILS
N.T.S

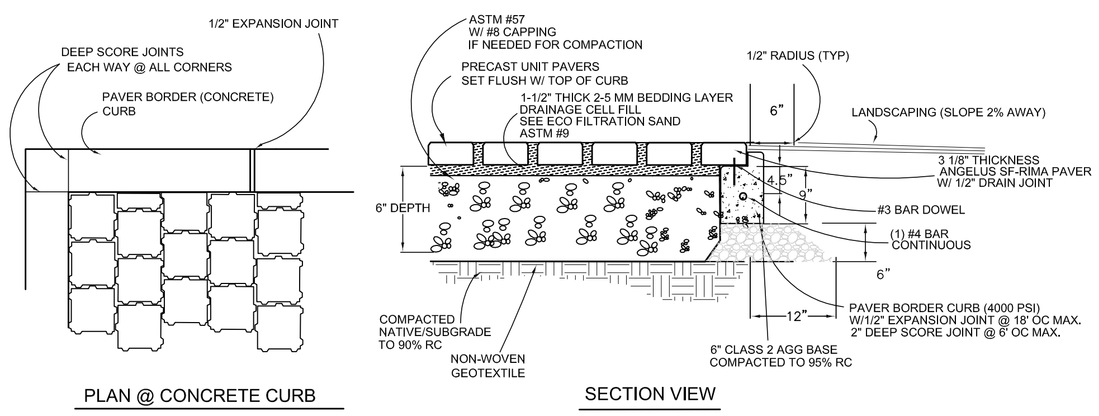

NOTES:

1. SPACING OF JOINTS IN CONCRETE CURB: EXPANSION JOINTS: 40' O.C. MAX.
   DEEP SCORE JOINTS: 10' O.C. MAX.
2. CONCRETE SHALL HAVE NATURAL GREY COLOR.
3. CONCRETE SURFACE TO BE HEAVY BROOM FINISH.
4. CONTRACTOR TO TAKE CARE WHEN FORMING CURBS AND BANDS TO AVOID CONCRETE SLUFF OR SPILLAGE. CONCRETE DEFORMATIONS THAT PREVENT PAVERS FROM FITTING FLUSH AGAINST CURB SHALL BE REPLACED.
5. CONCRETE SHALL BE 4000 PSI
6. PAVER COLORS SHALL BE GRAY, TERRA COTTA AND SANDSTONE (EQUAL QUANTITIES OF EACH)

3 C7.1 PERVIOUS PAVERS DETAIL
N.T.S

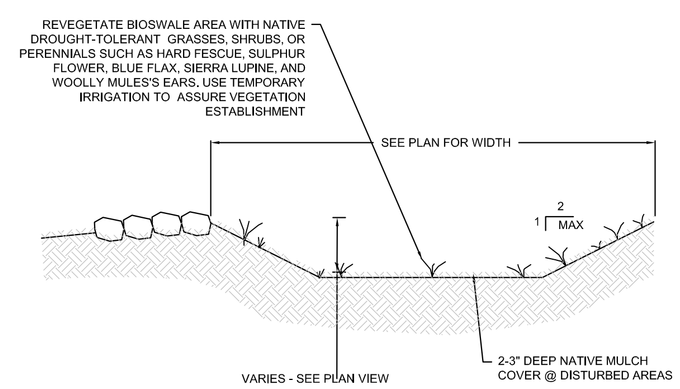

5 C7.1 BIOSWALE TYPICAL SECTION
N.T.S

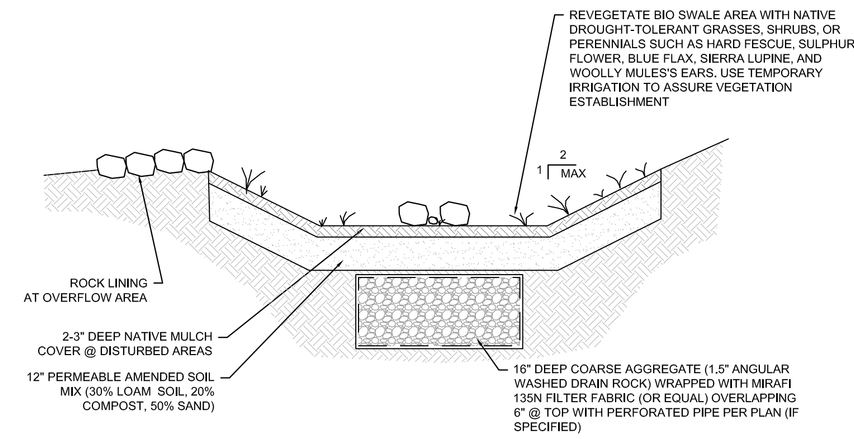

7 C7.1 BIOSWALE W/ SUBSURFACE INFILTRATION TYPICAL SECTION
N.T.S

LAKE TAHOE STANDARD DRAWING

(RESIDENTIAL USE ONLY)
BEST MANAGEMENT PRACTICE
PARKING BARRIERS

STANDARD DRAWING NO. BMP-026
DATE: 4-6-2012

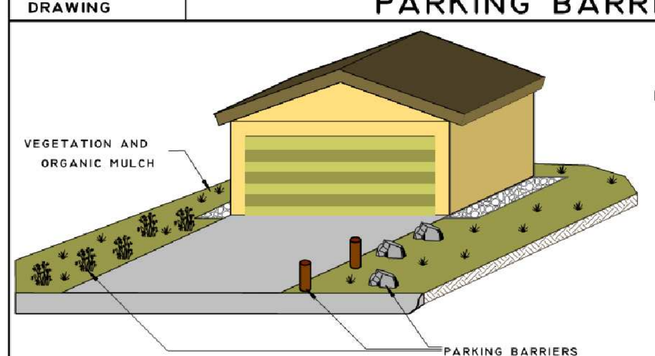

TYPICAL PARKING BARRIERS

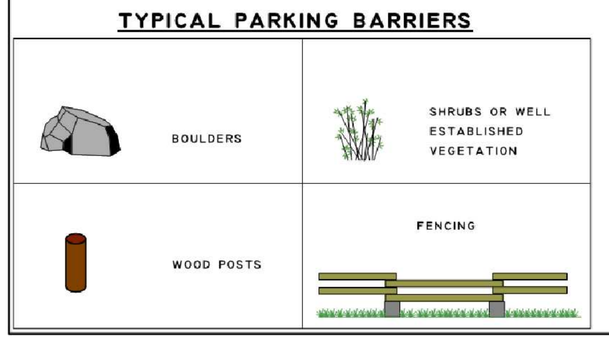

CONSTRUCTION NOTES

1. PARKING BARRIERS SHALL BE PLACED TO RESTRICT VEHICULAR ACCESS ON DISTURBED SOIL AREAS.

BOULDERS:
BOULDERS SHALL BE GREATER THAN 18" DIAMETER AND BE KEYED IN TO THE SOIL A MINIMUM OF 6"

POSTS:
WOOD POSTS SHALL BE A MINIMUM OF 2' ABOVE GRADE, AND ANCHORED IN A CONCRETE FOOTING

SHRUBS OR WELL ESTABLISHED VEGETATION:
THIS PARKING BARRIER IS NOT RECOMMENDED IN AREAS USED FOR SNOW STORAGE

FENCING
POSTS SHALL BE ANCHORED IN A CONCRETE FOOTING

2. INFORMATION ON REHABILITATING DISTURBED SOIL AREAS CAN BE FOUND ON THE NRCS "DIRECT SEEDING OF DISTURBED AREAS" TIP SHEET.

3. *REGULARLY SCHEDULED MAINTENANCE INCLUDING SERVICE, REPAIR, OR REPLACEMENT OF COMPONENTS IS NECESSARY TO MAINTAIN FULL FUNCTION.*

U.S. DEPARTMENT OF AGRICULTURE
NATURAL RESOURCES CONSERVATION SERVICE
IN COOPERATION WITH
TAHOE RESOURCE CONSERVATION DISTRICT, AND
NEVADA TAHOE CONSERVATION DISTRICT
DRAWN BY: SKB | APPROVED BY: | DATE:

THIS STANDARD DRAWING IS BASED ON A REFERENCE TO THE NRCS STANDARD PRACTICE 561 - HEAVY USE AREA PROTECTION SYSTEMS.
THIS DRAWING IS INTENDED TO ASSIST THE DESIGNER IN PREPARATION OF A COMPLETE SITE SPECIFIC DESIGN, AND IT IS NOT TO REPLACE THE INDEPENDENT JUDGMENT AND ANALYSIS BY A QUALIFIED DESIGNER.
USDA IS AN EQUAL OPPORTUNITY PROVIDER AND EMPLOYER

8 C7.1 NRCS PARKING BARRIERS DETAIL
N.T.S

LAKE TAHOE STANDARD DRAWING

(RESIDENTIAL USE ONLY)
BEST MANAGEMENT PRACTICE
EROSION CONTROL FOR ELEVATED STRUCTURES
(DECKS, OPEN STAIRCASES, WALKWAYS, AND ELEVATED DRIVEWAYS)

STANDARD DRAWING NO. BMP-010
DATE: 4-6-2012

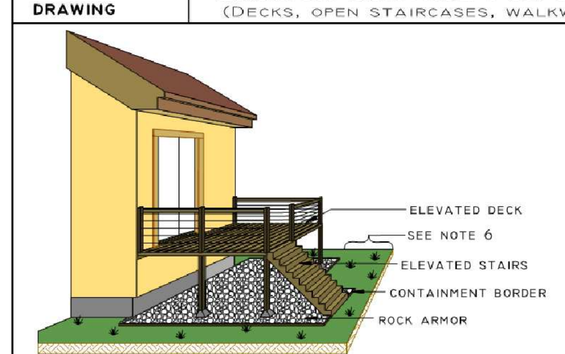

CONSTRUCTION NOTES

1. SUB-GRADE SHALL SLOPE 2% MINIMUM AWAY FROM FOUNDATION FOR 5'.
2. PLACE ROCK ARMOR BELOW THE ENTIRE ELEVATED STRUCTURE FOOTPRINT AND EXTEND 12" OUT FROM THE PERIMETER. INACCESSIBILITY MAY LIMIT TREATMENT UNDER ENTIRE FOOTPRINT.
3. 3/4" TO 1 1/2" DRAIN ROCK OR COBBLE IS RECOMMENDED FOR ROCK ARMOR ON SLOPES BETWEEN 0 AND 15%. INSTALL BAFFLES AS SHOWN TO CONTAIN ROCK ON SLOPES BETWEEN 10% AND 15%. NATIVE ROCK CAN BE SUBSTITUTED IF AVAILABLE. USE ROCK SLOPE PROTECTION ON STEEPER SLOPES. SEE BMP-040 AND BMP-041 FOR DETAIL.
4. FINISH GRADE OF ROCK SHALL BE AT LEAST 6" BELOW WOOD SIDING TO MAINTAIN EARTH TO WOOD SEPARATION REQUIRED BY LOCAL BUILDING CODES.
5. CONTAINMENT BORDERS ARE REQUIRED. OPTIONS FOR MATERIALS INCLUDE PRESSURE TREATED LUMBER, RECYCLED COMPOSITES, BRICK, STONE, COBBLE, OR OTHER LANDSCAPE EDGING MATERIAL. FIRE DEFENSIBLE SPACE GUIDELINES FOR LAKE TAHOE RECOMMEND A NON-COMBUSTIBLE AREA WITHIN 5 FEET OF A STRUCTURE. COMBUSTIBLE MATERIAL SHALL NOT CONNECT FROM THE BORDER TO THE STRUCTURE.
6. CONSULT WITH YOUR LOCAL FIRE PROTECTION DISTRICT WHEN LANDSCAPING NEAR STRUCTURES. VISIT WWW.LIVINGWITHFIRE.INFO/TAHOE FOR GUIDELINES ON THE DEFENSIBLE SPACE ZONE.
7. *REMOVE PINE NEEDLES AND ACCUMULATED SEDIMENT TO MAINTAIN FULL FUNCTION. KEEP AREA CLEAR OF STORED MATERIALS SUCH AS FIREWOOD, LUMBER, HOUSEHOLD ITEMS, ETC.*

INSTALLATION GUIDELINES

BAFFLE SPACING FOR ROCK ARMOR	SLOPE %
N/A	0-10
10'	10
5'	15

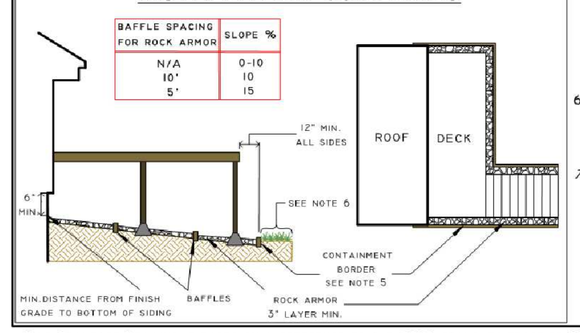

U.S. DEPARTMENT OF AGRICULTURE
NATURAL RESOURCES CONSERVATION SERVICE
IN COOPERATION WITH
TAHOE RESOURCE CONSERVATION DISTRICT, AND
NEVADA TAHOE CONSERVATION DISTRICT
DRAWN BY: DMG/CLT | APPROVED BY: | DATE:

THIS STANDARD DRAWING IS BASED ON A REFERENCE TO THE NRCS STANDARD PRACTICE 570 - STORMWATER RUNOFF CONTROL. THIS DRAWING IS INTENDED TO ASSIST THE DESIGNER IN PREPARATION OF A COMPLETE SITE SPECIFIC DESIGN, AND IT IS NOT TO REPLACE THE INDEPENDENT JUDGMENT AND ANALYSIS BY A QUALIFIED DESIGNER.
USDA IS AN EQUAL OPPORTUNITY PROVIDER AND EMPLOYER

9 C7.1 NRCS EROSION CONTROL FOR ELEVATED STRUCTURES DETAIL
N.T.S

REV.	DATE	DESCRIPTION	APPROVED	DATE

OWNERS INFORMATION
6980 WEST LAKE, LLC
P.O. Box 430
Rancho Santa Fe, CA 92067

TIESLAU CIVIL ENGINEERING, INC.
3080 NORTH LAKE BLVD
TAHOE CITY, CA 96145
P.O. BOX 412
TAHOE VISTA, CA 96148
ATCIVIL.COM
(530) 546-4805

REGISTERED PROFESSIONAL ENGINEER
ADRIAN TIESLAU
No. 60323
CIVIL
STATE OF CALIFORNIA

CIVIL DETAILS
TAHOE CEDARS
PLACER COUNTY
CALIFORNIA
TAHOMA

COMP:____ DESIGN:
DRWN: PRJ.ENG: AT

PROJECT #: 16.005
SCALE:
HORIZONTAL: N/A
VERTICAL:

DATE: 2-24-17

C7.1

LAKE TAHOE STANDARD DRAWING	(RESIDENTIAL USE ONLY) BEST MANAGEMENT PRACTICE **SEDIMENT TRAP**	STANDARD DRAWING NO. **BMP-030** DATE: 4-6-2012

GENERAL NOTES: SEDIMENT TRAPS HELP PROTECT INFILTRATION SYSTEMS FROM PREMATURE CLOGGING FROM DIRTY STORM WATER. **REFER TO THE BMP "SITE EVALUATION RECOMMENDED TREATMENTS" FORM FOR SITE SPECIFIC SEDIMENT TRAP SIZE.** FOR SOME AVAILABLE PRODUCTS, SEE NRCS "SEDIMENT TRAP SIZING SHEET" BMP-030A. THE LIST IS THE RESULT OF A LIMITED SEARCH OF LOCAL AND INTERNET BASED SUPPLIERS. OTHER PRODUCTS ARE APPLICABLE.

INSTALLATION: (REFER TO NRCS STANDARD DRAWING, BMP-007 FOR AN OVERVIEW OF INFILTRATION SYSTEMS.)

1. DETERMINE THE APPROPRIATE PLACEMENT OF THE SEDIMENT TRAP. IT MAY BE PLACED EITHER DIRECTLY IN THE INFILTRATION SYSTEM OR UPSTREAM OF IT. THE TRAP MUST BE LOCATED SUCH THAT WATER WILL FLOW INTO IT FROM THE IMPERVIOUS SURFACE AND LEAVE IT DOWNSTREAM TO THE INFILTRATION SYSTEM. ENSURE THAT THE DEPTHS REQUIRED FOR INSTALLATION ARE NOT IN CONFLICT WITH BEDROCK, UTILITIES, HIGH GROUNDWATER, ETC. CALL FOR APPROVAL IF DESIGN MODIFICATIONS ARE REQUIRED.
2. IF THE SEDIMENT TRAP IS UPSTREAM FROM THE INFILTRATION SYSTEM DIG A HOLE LARGE ENOUGH TO ALLOW 3" OF BACKFILL (GRAVEL OR SAND) ON EACH SIDE AND THE BOTTOM OF THE SEDIMENT TRAP (BOX). IF IT IS PLACED IN THE INFILTRATION SYSTEM CREATE THE NECESSARY SPACE.
3. CUT WEEP HOLES IN THE BOTTOM OF THE BOX OR SELECT A BOTTOMLESS BOX. MINIMALLY THIS SHOULD BE ABOUT 4 - ¾" HOLES. WHETHER A BOTTOMLESS BOX OR WEEP HOLES, THE AREA BELOW THE BOX NEEDS TO BE PROTECTED FROM SEDIMENT CLOGGING. THIS IS DONE BY COVERING THE WEEP HOLES OR BOTTOM OF BOTTOMLESS BOX COMPLETELY WITH A SAND BAG FILTER OR ALTERNATIVE METHOD (SEE NOTE 5.)
4. PLACE THE ASSEMBLED BOX TO THE PROPER GRADE AND CONNECT PIPE(S) AS APPROPRIATE. THE INLET PIPE MUST SLOPE TOWARDS THE BOX AND THE OUTLET PIPE AWAY FROM THE BOX BOTH AT A MINIMUM OF ¼ INCH VERTICAL DROP PER 1 FOOT HORIZONTAL DISTANCE. INSURE A SNUG CONNECTION SO THAT STORM WATER IS NOT ABLE TO ESCAPE AROUND THE SIDES OF THE PIPE. ENSURE THAT NO FILTER FABRIC BLOCKS THE INLET OR OUTLET, HOWEVER, SOME SCREENING OF THE OUTLET PIPE WITH HARDWARE CLOTH, WIRE MESH, ETC. IS NECESSARY TO PREVENT FLOATABLE DEBRIS, SUCH AS PINE NEEDLES, FROM CLOGGING THE SYSTEM. SIMPLY SECURE THE SCREEN OVER THE OUTLET INSIDE THE BOX. A 90 DEGREE ELBOW MAY BE ADDED TO INCREASE SEDIMENT STORAGE FOR TOP INLET MODEL (SEE DRAWING).
5. COVER THE WEEP HOLES WITH A SAND BAG FILTER. THE SAND BAG FILTER MAY BE CONSTRUCTED FROM A 1 OR 5 GALLON PAINT STRAINER FILLED WITH CLEAN WASHED PLAY SAND. SIMILAR TO CONNECTING THE PIPES IN #4 ABOVE, STORM WATER MUST NOT BE ABLE TO ESCAPE AROUND THE SAND BAG FILTER AND OUT THE BOTTOM OF THE TRAP.
6. ALL INSTALLATIONS MUST BE APPROPRIATELY LOAD RATED AS NECESSITATED BY POTENTIAL VEHICLE TRAFFIC. ALTERNATIVELY, BLOCK ACCESS WITH PARKING BARRIERS PER BMP-026.
7. ADD EXTENSIONS AS NEEDED TO ADJUST LID TO FINISH GRADE. BACKFILL SYSTEM TO THE TOP OF THE BOX.

MAINTENANCE. INSPECT IN SPRING, FALL, AND AFTER HEAVY RAINS. REMOVE AND DISPOSE OF SEDIMENT AND DEBRIS PROPERLY. CHECK SAND BAG FILTER AND PIPES FOR CLOGGING AND RE-ESTABLISH DRAINAGE AS NEEDED. REMOVE AND REPLACE OR REJUVENATE SAND BAG FILTER WHEN DRAIN TIME OF FULL BOX AFTER STORM EXCEEDS 48 HOURS.

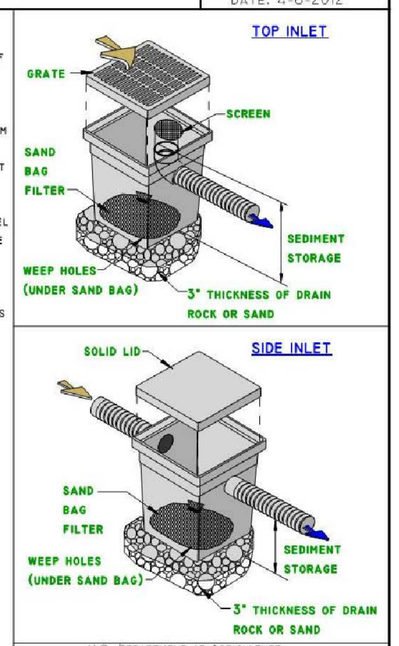

U.S. DEPARTMENT OF AGRICULTURE
NATURAL RESOURCES CONSERVATION SERVICE
IN COOPERATION WITH
TAHOE RESOURCE CONSERVATION DISTRICT, AND
NEVADA TAHOE CONSERVATION DISTRICT

DRAWN BY: | APPROVED BY: | DATE | CLT

THIS STANDARD DRAWING IS BASED ON A REFERENCE TO THE NRCS STANDARD PRACTICE 570-STORMWATER RUNOFF CONTROL.
THIS DRAWING IS INTENDED TO ASSIST THE DESIGNER IN PREPARATION OF A COMPLETE SITE SPECIFIC DESIGN, AND IT IS NOT TO REPLACE THE INDEPENDENT JUDGMENT AND ANALYSIS BY A QUALIFIED DESIGNER.
USDA IS AN EQUAL OPPORTUNITY PROVIDER AND EMPLOYER

1 C7.2 NRCS SEDIMENT TRAP DETAIL
N.T.S

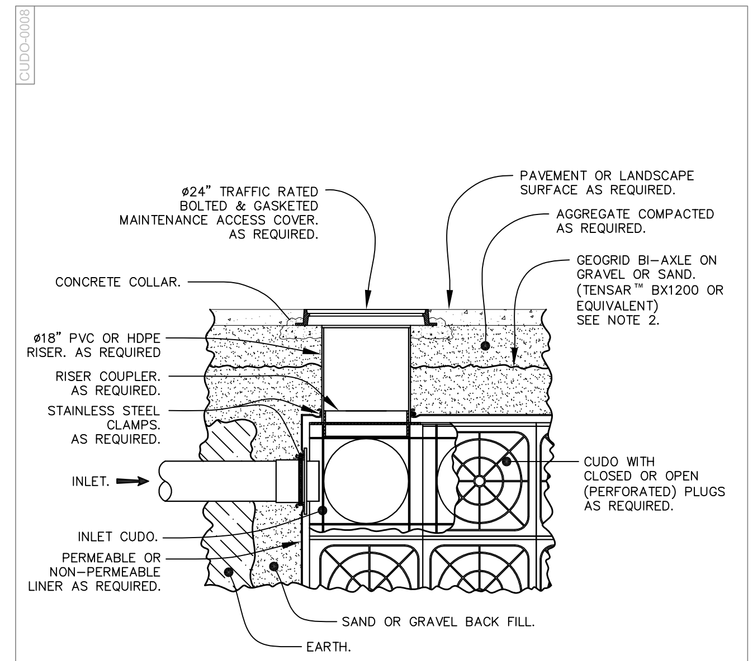

NOTES:
1. REFER TO CUDO INSTALLATION DETAILS.
2. INSTALL GEOGRID LAYER, (TENSAR™ BX1200 OR EQUIVALENT) IN ACCORDANCE WITH MANUFACTURER RECOMMENDATIONS IN AREAS SUBJECT TO VEHICLE TRAFFIC.

PATENT PENDING

TITLE: CUDO Water Storage System
TYPICAL MAINTENANCE ACCESS

CUDO Stormwater Products, Inc.
P.O. Box 497 Occidental, CA 95465
Ph. (877) 876-3345 Fax (707) 876-3346

CUDO-0008 | A | 0001 JPR 9/26/08 | JPR 5/2/08 | SHEET 1 OF 1

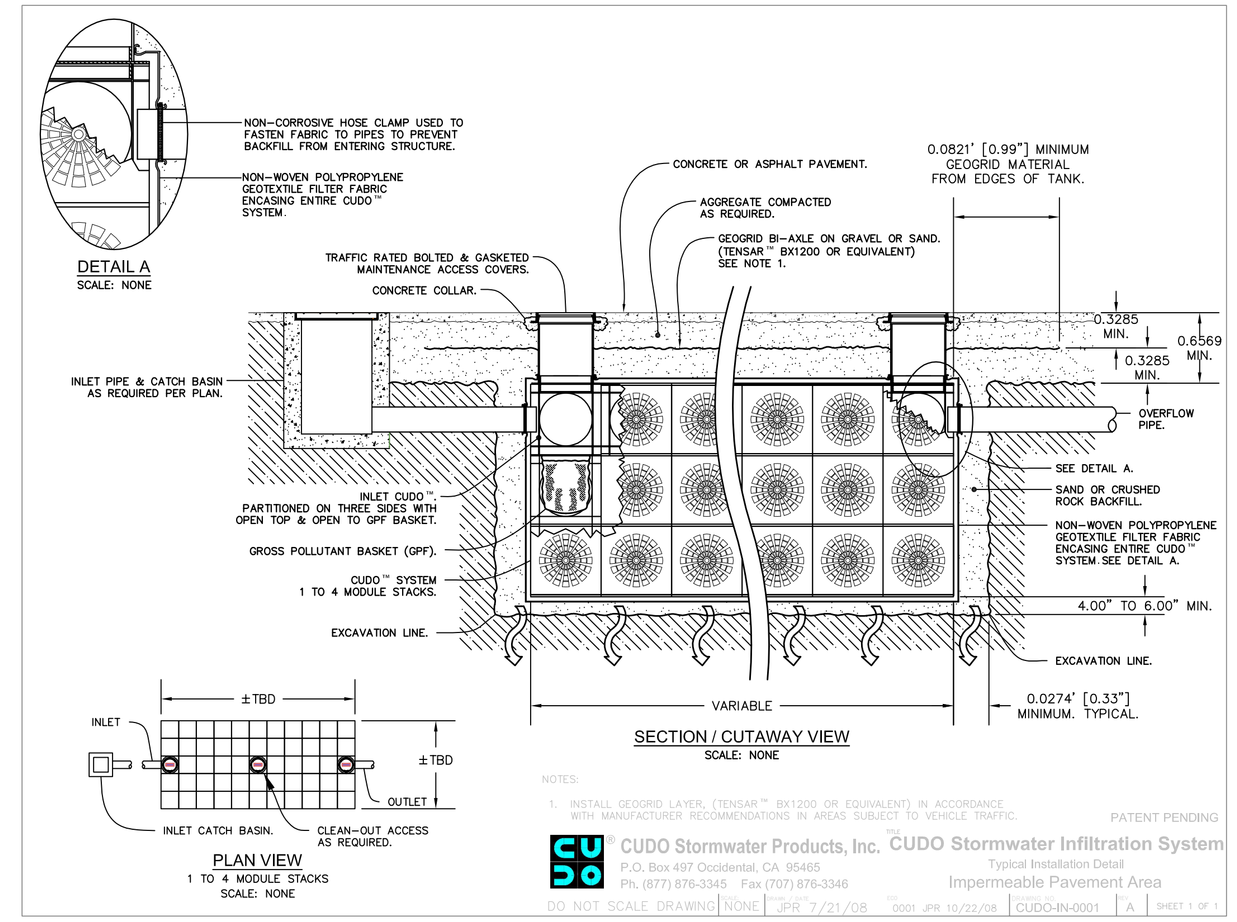

NOTES:
1. INSTALL GEOGRID LAYER, (TENSAR™ BX1200 OR EQUIVALENT) IN ACCORDANCE WITH MANUFACTURER RECOMMENDATIONS IN AREAS SUBJECT TO VEHICLE TRAFFIC.

PATENT PENDING

CUDO Stormwater Products, Inc.
P.O. Box 497 Occidental, CA 95465
Ph. (877) 876-3345 Fax (707) 876-3346

CUDO Stormwater Infiltration System
Typical Installation Detail
Impermeable Pavement Area

DO NOT SCALE DRAWING | NONE | JPR 7/21/08 | 0001 JPR 10/22/08 | CUDO-IN-0001 | A | SHEET 1 OF 1

3 C7.2 CUDO CUBE MANUFACTURER'S DETAILS
N.T.S

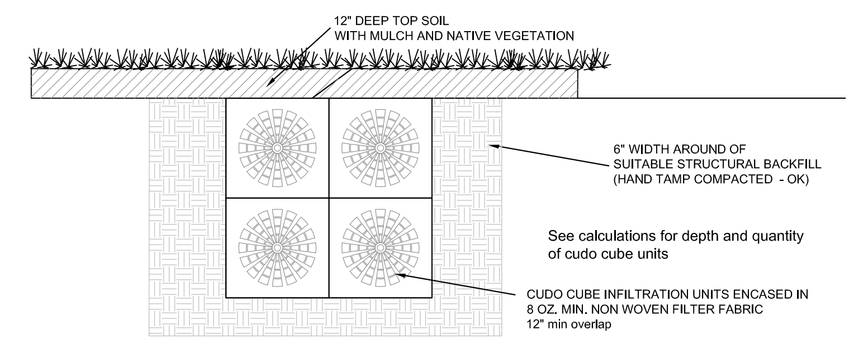

Kristar Enterprises, Inc currently supplies
Cudo Cube Unit in California 707-975-0909

5 C7.2 TYPICAL CUDO CUBE IN UNPAVED (NON-TRAFFIC) AREA
N.T.S

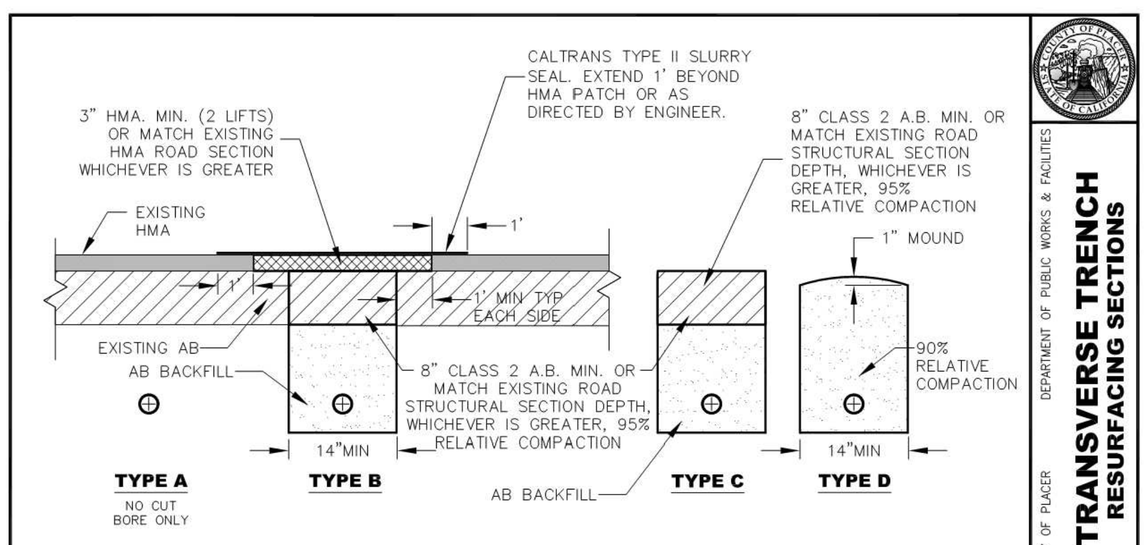

TYPE A: PAVEMENT SURFACES LESS THAN 5 YEARS OLD, SURFACE TREATMENTS LESS THAN 3 YEARS OLD, & MAJOR THOROUGHFARES WITH HIGH QUALITY RIDING SURFACES, BORING OR JACKING ONLY. NO PAVEMENT CUTTING PERMITTED.

TYPE B: PAVEMENT GREATER THAN 5 YEARS OLD

TYPE C: UNSURFACED ROAD SHOULDER OR OTHER AREAS SUBJECT TO TRAFFIC LOADS

TYPE D: OUTSIDE ROADWAY, NOT SUBJECT TO TRAFFIC LOADS

NOTES:
1. SEE PLATES 433, 434, 435 AND PLACER COUNTY GENERAL SPECIFICATIONS SECTION 19 FOR APPLICABLE TRENCH, BACKFILL, AND COMPACTION REQUIREMENTS.
2. WHERE OPEN-GRADE OR OTHER SPECIALIZED HMA/SURFACE TREATMENT IS PRESENT, RESTORATION REQUIREMENTS WILL BE DETERMINED BY ENGINEER.
3. WHERE GEOTEXTILE FABRIC IS PRESENT, RESTORATION REQUIREMENTS WILL BE DETERMINED BY ENGINEER.

COUNTY OF PLACER — DEPARTMENT OF PUBLIC WORKS & FACILITIES
TRANSVERSE TRENCH RESURFACING SECTIONS
DATE: APR. 2016
SCALE: NOT TO SCALE
PLATE **431**

2 C7.2 PLACER COUNTY TRANSVERSE TRENCH DETAIL
N.T.S

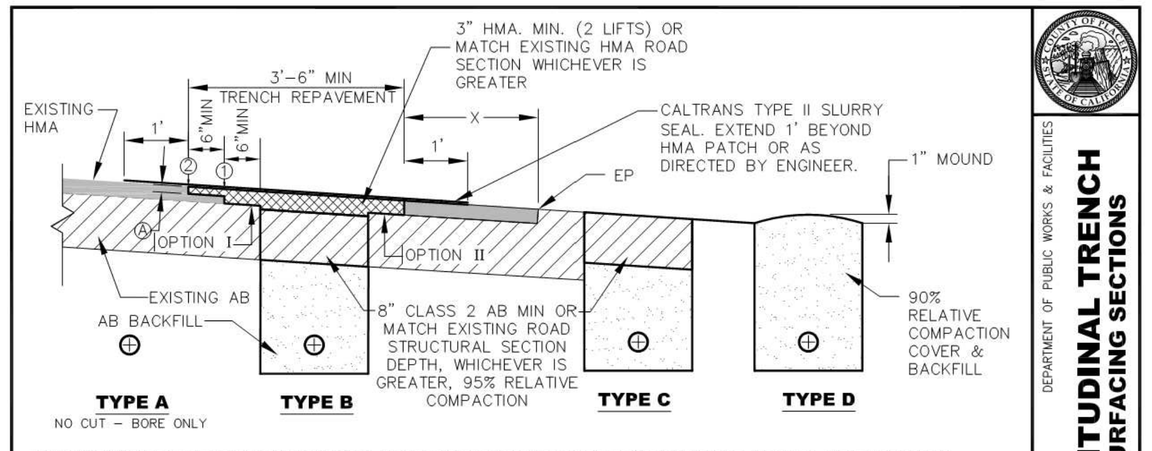

TYPE A: PAVEMENT LESS THAN 5 YRS OLD, SURFACE TREATMENT LESS THAN 3 YRS OLD, AND MAJOR THOROUGHFARES WITH HIGH QUALITY RIDING SURFACES
1. BORING AND JACKING ONLY–NO PAVEMENT CUTTING UNLESS REQUESTED IN WRITING AND APPROVED IN WRITING BY THE DIRECTOR OF DPW.
2. RESTORATION SHALL BE AS DIRECTED BY THE ENGINEER AND MAY INCLUDE:
   A. COMPLETE ROAD OVERLAY AFTER TRENCHING 0.2 FT. MIN. THICKNESS OR AS SPECIFIED ON THE PERMIT.
   B. COMPLETE ROAD RECONSTRUCTION TO MATCH EXISTING.
3. ANY OTHER RESTORATION MUST BE REQUESTED IN WRITING AND APPROVED IN WRITING BY THE DIRECTOR OF PUBLIC WORKS.

TYPE B: PAVEMENT OLDER THAN 5 YEARS; OR SURFACE TREATMENT OLDER THAN 3 YRS
1. THE ENGINEER SHALL DETERMINE WHICH OPTION (I OR II) APPLIES.
2. IF USING OPTION I: TRENCH RESTORATION TO INCLUDE PLACEMENT OF NEW HMA USING OFFSET JOINT WITH MIN. 6" + 6" LAP EACH SIDE. GRIND DEPTH (A) TO BE 0.2' AT DISCRETION OF COUNTY WHERE EXISTING AC SECTION IS LESS THAN 3". NEW HMA SHALL BE PLACED IN TWO LIFTS. THE FIRST LIFT SHALL BE TO TOP OF OFFSET JOINT AT SAWCUT LINE (1) SECOND LIFT SHALL BE FULL WIDTH OF NEW AC TO GRIND LINE (2). COUNTY MAY REQUIRE PLACEMENT OF GEOTEXTILE FABRIC BETWEEN TWO AC LIFTS WHERE EXTENSIVE SURFACE CRACKS ARE PRESENT OR IF POOR SOIL CONDITIONS EXIST.
3. IF X<3 FT. FOR ALL TRENCHES REPAVE TO E.P.
4. SLURRY SEAL OR OTHER ASPHALT MATERIAL AS DIRECTED BY THE ENGINEER, MINIMUM OF 2 FT. EITHER SIDE OF TRENCH LIMITS, IF X< 5 FT. SEAL TO E.P. A MINIMUM OF ONE FOOT BEYOND THE SAWCUT/GRIND LIMITS AND/OR LIMITS OF DISTURBANCE.
5. DAMAGE TO THE STRUCTURAL SECTION OR THE PAVEMENT SURFACE RESULTING FROM WORK UNDER THIS PERMIT SHALL BE RESTORED BY THE PERMITTEE TO EQUAL OR BETTER CONDITIONS AS DIRECTED BY THE COUNTY. EXTENSIVE DAMAGE MAY REQUIRE RESTORATION VIA CREATION OF A NEW STRUCTURAL SECTION.
6. IF OPEN GRADE OR OTHER SPECIALIZED HMA/SURFACE TREATMENT IS PRESENT, RESTORATION REQUIREMENTS WILL BE DETERMINED BY ENGINEER.
7. PAVEMENT REPAIR JOINTS SHALL BE LOCATED OUTSIDE OF VEHICLE WHEEL PATH.
8. WHERE GEOTEXTILE FABRIC IS PRESENT, RESTORATION REQUIREMENTS WILL BE DETERMINED BY ENGINEER.
9. SEE PLATES 433–435 AND PLACER COUNTY GENERAL SPECS SECTION 19 FOR TRENCH, BACKFILL, AND COMPACTION REQUIREMENTS.

TYPE C: UNSURFACED ROAD SHOULDER OR OTHER AREAS SUBJECT TO TRAFFIC LOADS
TYPE D: OUTSIDE ROADWAY PRISM, NOT SUBJECT TO TRAFFIC

COUNTY OF PLACER — DEPARTMENT OF PUBLIC WORKS & FACILITIES
LONGITUDINAL TRENCH RESURFACING SECTIONS
DATE: APR. 2016
SCALE: NOT TO SCALE
PLATE **432**

4 C7.2 PLACER COUNTY LONGITUDINAL TRENCH DETAIL
N.T.S

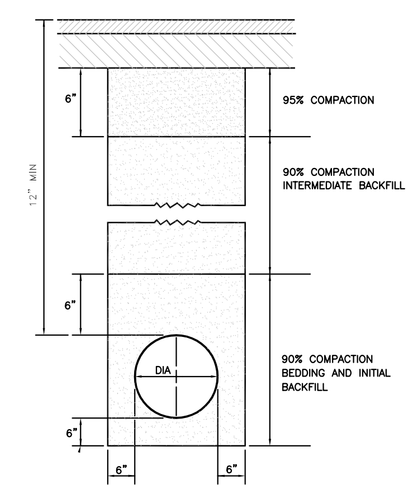

6 C7.2 TYPICAL STORM DRAIN PIPE
N.T.S

REV	DATE	DESCRIPTION	APPROVED	DATE

OWNERS INFORMATION
6980 WEST LAKE, LLC
P.O. Box 430
Rancho Santa Fe, CA 92067

TIESLAU CIVIL ENGINEERING, INC.
3080 NORTH LAKE BLVD
TAHOE CITY, CA 96145
P.O. BOX 412
TAHOE VISTA, CA 96148
ATCIVIL.COM
(530) 546-4805

REGISTERED PROFESSIONAL ENGINEER — ADRIAN TIESLAU — No. 60323 — CIVIL — STATE OF CALIFORNIA

CIVIL DETAILS
TAHOE CEDARS
PLACER COUNTY — CALIFORNIA — TAHOMA

COMP: ____ DESIGN:
DRWN: PRJ.ENG: AT

PROJECT #: 16.005
SCALE:
HORIZONTAL: N/A
VERTICAL:

DATE: 2-24-17

C7.2

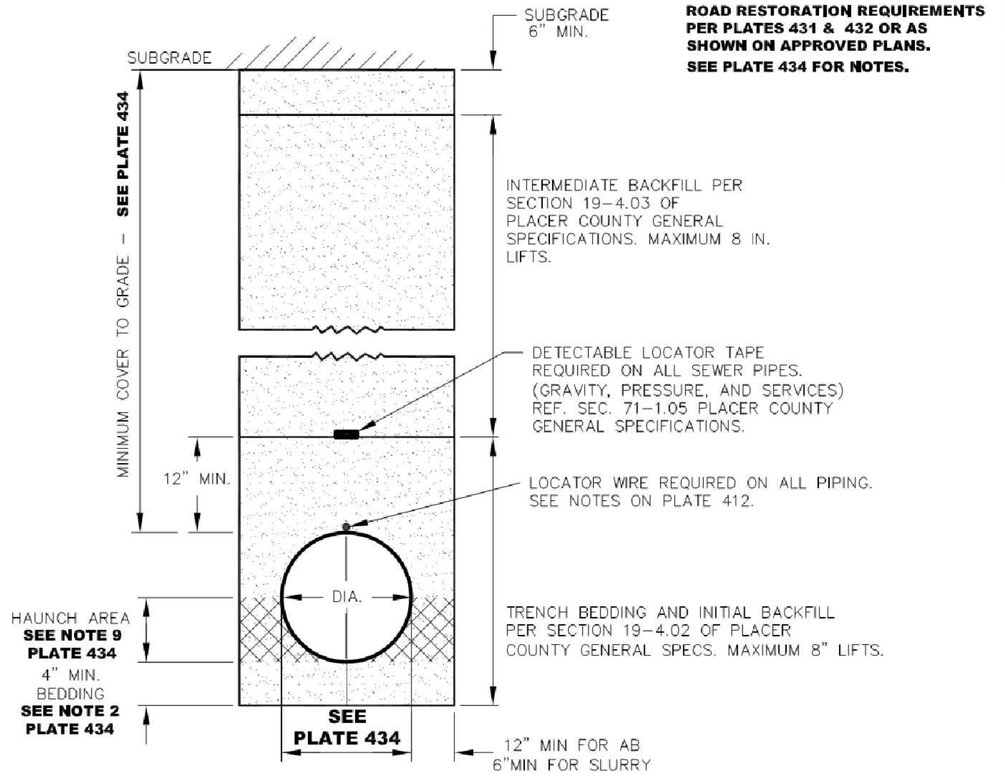

ROAD RESTORATION REQUIREMENTS PER PLATES 431 & 432 OR AS SHOWN ON APPROVED PLANS. SEE PLATE 434 FOR NOTES.

COUNTY OF PLACER — DEPARTMENT OF PUBLIC WORKS & FACILITIES

TRENCH EXCAVATION AND BACKFILL

DATE: APR. 2016

SCALE: NOT TO SCALE

PLATE **433**

NOTES:

1. UNLESS OTHERWISE APPROVED, MINIMUM COVERAGE FROM TOP OF PIPE TO FINISH GRADE SHALL BE AS FOLLOWS:

SEWER	36 IN.
WATER	30 IN.
CULVERTS	18 IN.
STORM DRAINS	18 IN.
OTHER UTILITIES	30 IN.

2. IN WET OR ROCKY MATERIAL, THE DEPTH OF TRENCH BEDDING SHALL BE INCREASED TO THE LARGER OF EITHER 6 IN. OR 1/4 DIA.
3. FOR CULVERTS/STORM DRAINS, THE MINIMUM DISTANCE BETWEEN THE SIDE OF THE TRENCH AND THE SIDE OF THE PIPE SHALL BE 12 IN.
4. MINIMUM COMPACTION REQUIREMENTS (SEE SECTION 19-4.04 OF THE PLACER COUNTY GENERAL SPECIFICATIONS).

   A. WITHIN ROADWAY PRISM–

   BEDDING/INITIAL BACKFILL
   SUBGRADE 95%
   INTERMEDIATE BACKFILL 92%

   B. OUTSIDE ROADWAY PRISM–
   BEDDING/INITAL BACKFILL 90%
   INTERMEDIATE BACKFILL 90%

5. IN AREAS WITH MINIMUM COVER, INTERMEDIATE BACKFILL SHALL BE CLASS 2 AGGREGATE BASE.
6. IN AREAS OF NATURAL VEGETATION OR LANDSCAPING, REMOVE TOP 12 IN. OF MATERIAL, STOCKPILE & REPLACE IN A MOUND PER PLATE 431, TYPE D AND PLATE 432, TYPE D.
7. ALL LANDSCAPING CONDUITS WITHIN THE ROADWAY PRISM AND/OR TRAFFIC AREAS MUST HAVE MINIMUM OF 30 INCHES COVER. MINIMUM COVER WITHIN COUNTY R/W BUT OUTSIDE THE ROADWAY AND TRAFFIC AREAS SHALL BE AS FOLLOWS:

LOW VOLTAGE ELECTRICAL CONDUITS	24 IN. MIN
PRESSURIZED WATERLINES	24 IN. MIN
NONPRESSURIZED (DISCHARGED) LATERALS	12 IN. MIN

8. COMPACTION TESTING WITHIN THE PIPE ZONE (BOTTOM OF TRENCH TO 12 IN. ABOVE CONDUIT(S)) SHALL BE PERFORMED BY TESTING LAB AS APPROVED BY THE COUNTY OR DONE BY THE COUNTY AND REIMBURSED BY THE APPLICABLE DEVELOPER OR UTILITY COMPANY.
9. SHOVEL SLICE BEDDING MATERIAL UNIFORMLY UNDER PIPE IN HAUNCH AREA. SHOVEL SLICING SHALL BE COMPLETED BEFORE THE BEDDING IS BROUGHT UP TO THE PIPE SPRINGLINE AND PREFERABLY WHEN IT IS NO HIGHER THAN THE QUARTER POINT OF THE PIPE.

COUNTY OF PLACER — DEPARTMENT OF PUBLIC WORKS & FACILITIES

TRENCH EXCAVATION AND BACKFILL - NOTES

DATE: APR. 2016

SCALE: NOT TO SCALE

PLATE **434**

1 / C7.3 PLACER COUNTY TRENCH EXCAVATION AND BACKFILL DETAILS
N.T.S

COUNTY OF PLACER
Community Development Resource Agency — **BUILDING**

FIRE SAFE RESIDENTIAL DRIVEWAY STANDARDS

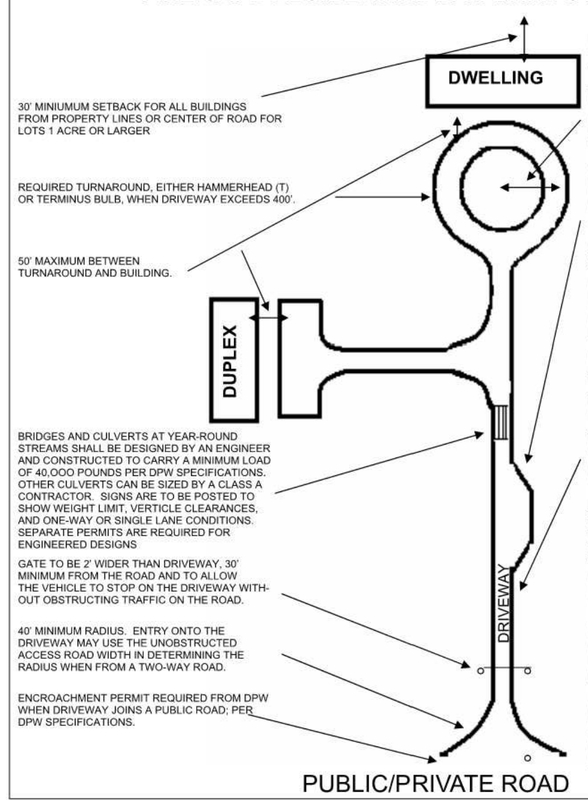

GENERAL NOTES
REQUIREMENTS ARE MINIMUM UNLESS SUPERSEDED BY SUBDIVISION/PARCEL MAP APPROVALS.

40' MINIMUM RADIUS AT CENTER LINE OF DRIVEWAY TURNAROUND

PROVIDE A TURNOUT AT MIDPOINT OF DRIVEWAY. SAME SURFACE AS DRIVEWAY, WHEN THE DRIVEWAY EXCEEDS 150'. DRIVEWAYS LESS THAN 400' MAY OMIT TURNOUT WHEN FULL SIGHT DISTANCE IS MAINTAINED. IF DRIVEWAY EXCEEDS 800' TURNOUTS SHALL BE NO MORE THAN 400' APART; TURNOUT TO BE 10' WIDE BY 30' LONG WITH A MINIMUM TAPER AT EACH END.

DRIVE WAY WHEN BUILDING IS MORE THAN 50' FROM THE ROAD:
THE GRADE IS NOT TO EXCEED 16% (SEE DRIVEWAY EXCEPTION). 10' MINIMUM DRIVEWAY WIDTH. 15' MINIMUM VERTICLE CLEARANCES. THE MINIMUM CENTER LINE RADIUS ON CURVES IS 40'. ONE DRIVEWAY SHALL SERVE NOT MORE THAN 2 BUILDINGS WITH NO MORE THAN 3 DWELLING UNITS AND ANY NUMBER OF ACCESSORY BUILDINGS. THE DRIVEWAY MUST BE ALL WEATHER AND SUPPORT A 40,000 LB VEHICLE. MINIMUM RECOMMENDED SURFACING ON A 90% COMPACTED SOIL IS 6" OF AGGREGATE BASE. **ALTERNATE** SURFACING DESIGNS MAY BE PERMITTED FROM AN ENGINEER OR CLASS A CONTRACTOR CERTIFYING THE DRIVEWAY WILL SUPPORT A 40,000 POUND VEHICLE AND BE ALL-WEATHER.

EXCEPTION: WHEN APPROVED BY THE FIRE DISTRICT, DRIVEWAYS BETWEEN 16% AND 20% MAY BE ALLOWED WHEN SURFACED WITH APPROVED ASPHALT OR CONCRETE.

DRIVEWAYS OVER 20% GRADE REQUIRE FIRE DEPARTMENT APPROVAL PRIOR TO FOUNDATION INSPECTION

501.2 ADDRESS NUMBERS. BUILDINGS SHALL HAVE APPROVED ADDRESS NUMBERS, BUILDING NUMBERS OR APPROVED BUILDING IDENTIFICATION PLACED IN A POSITION THAT IS PLAINLY LEGIBLE AND VISIBLE FROM THE STREET OR ROAD FRONTING THE PROPERTY. THESE NUMBERS SHALL CONTRAST WITH THEIR BACKGROUND. ADDRESS NUMBERS SHALL BE ARABIC NUMERALS OR ALPHABETICAL LETTERS. NUMBERS SHALL BE A MINIMUM OF 4 " HIGH WITH A MINIMUM STROKE WIDTH OF 0.5 INCH.

3091 County Center dr. Suite 160 / Auburn, California 95603 / (530) 745-3010 / Fax (530) 745-3058
Internet Address: http://www.placer.ca.gov / email: building@placer.ca.gov

2 / C7.3 PLACER COUNTY FIRE SAFETY RESIDENTIAL DRIVEWAY DETAIL
N.T.S

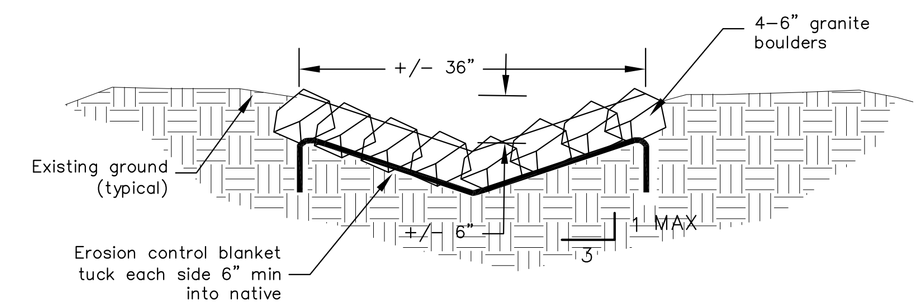

3 / C7.3 ROCK LINED SWALE
N.T.S

REV.	DATE	DESCRIPTION	APPROVED	DATE

OWNERS INFORMATION
6980 WEST LAKE, LLC
P.O. Box 430
Rancho Santa Fe, CA 92067

TIESLAU CIVIL ENGINEERING, INC.
3080 NORTH LAKE BLVD
TAHOE CITY, CA 96145
P.O. BOX 412
TAHOE VISTA, CA 96148
ATCIVIL.COM
(530) 546-4805

REGISTERED PROFESSIONAL ENGINEER — ADRIAN TIESLAU — No. 60323 — CIVIL — STATE OF CALIFORNIA

CIVIL DETAILS

TAHOE CEDARS

PLACER COUNTY — CALIFORNIA — TAHOMA

COMP:____ DESIGN:
DRWN: PRJ.ENG: AT

PROJECT #: 16.005
SCALE:
HORIZONTAL: N/A
VERTICAL:

DATE: 2-24-17

C7.3

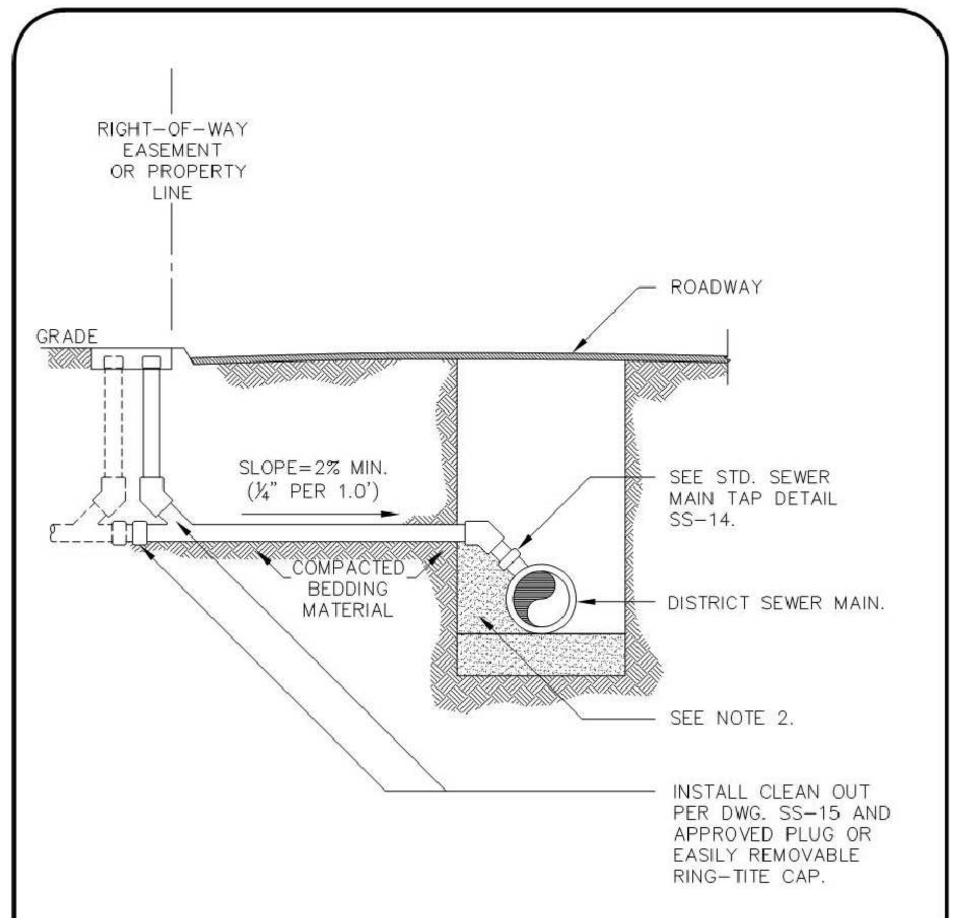

NOTES:
1. HORIZONTAL SECTIONS OF HOUSE SERVICE TO HAVE SAME BEDDING AS REQUIRED FOR STREET SEWERS.
2. SEE DISTRICT STANDARD DRAWING SS-14, SEWER MAIN TAP FOR BEDDING AND SUPPORT.
3. CONTRACTOR REQUIRED TO REPLACE HOUSE SERVICE TO R/W OR PROPERTY LINE, INCLUDING CONSTRUCTION OF CLEAN OUT WHERE REQUIRED IN SPECIAL PROVISIONS.

SCALE: N.T.S.

Tahoe City Public Utility District
P.O. BOX 5249
TAHOE CITY, CA. 96145

STD. RESIDENTIAL SEWER SERVICE

DWG. No. SS-13 OCTOBER, 2004
APPROVED:
DISTRICT ENGINEER RCE 49193

1 / C7.4 STANDARD HOUSE SERVICE SEWER CONNECTION (TCPUD SS-13)
N.T.S

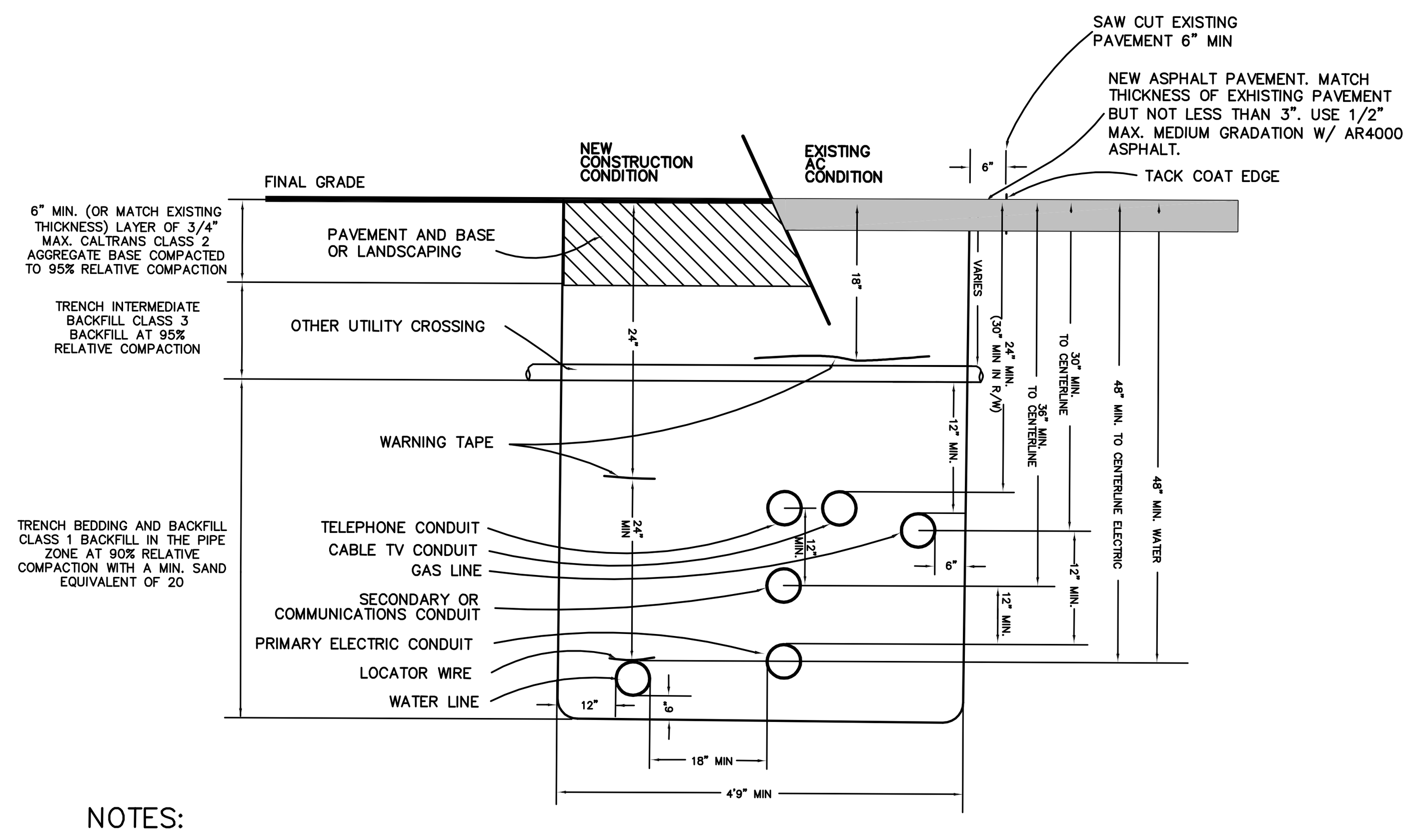

NOTES:
1) SEE STORM DRAIN TRENCHING DETAIL FOR SURFACE RESTORATION.
2) ALL TRENCHING AND BACKFILL SHALL BE PER APPLICABLE P.U.D. STANDARDS, AT&T STANDARDS, CHARTER CABLE STANDARDS, AND SOUTHWEST GAS COMPANY STANDARDS .
4) SEE PLANS BY LIBERTY UTILITIES FOR SIZE, TYPE AND NUMBER OF ELECTRICAL CONDUITS.
5) SEE PLANS BY AT&T FOR SIZE, TYPE AND NUMBER OF TELEPHONE CONDUITS.
6) SEE PLANS BY CHARTER COMMUNICATIONS FOR SIZE, TYPE AND NUMBER OF CABLE TELEVISION CONDUITS.
7) SEE PLANS BY SOUTHWEST GAS COMPANY FOR SIZE AND TYPE OF GAS PIPE.
8) ELIMINATE PIPE OR CONDUIT AS REQUIRED.
9) PROVIDE 18" MIN. SEPERATION BETWEEN WATER AND GAS, ELECTRIC AND COMMUNICATIONS.
10) TRENCH SHALL BE GRADED TRUE AND FREE OF ROCKS.
11) SAND BACKFILL SHALL BE INSTALLED AS BEDDING BEFORE LAYING CONDUIT. DISTRICT PERSONNEL INSPECTION REQUIRED:
A: INSTALLATION OF PIPE/CONDUIT PRIOR TO BACKFILL.
B: AFTER TRENCH HAS BEEN BACKFILLED WITH CLASS 1 BACKFILL AND WARNING TAPE INSTALLED.
12) MAXIMUM BACKFILL LIFTS (LOOSE) 0.67 FT. (8"). NO ROCKS OVER 2" IN SIZE ARE PERMITTED IN CLEAN BACKFILL. COMPACT ALL BACKFILL MATERIAL TO A MINIMUM OF 90% RELATIVE COMPACTION.
13) ALL CONDUITS SHALL BE PROVEN FREE AND CLEAR OF DIRT, ROCKS, ETC., BY MEANS OF A MANDREL.
14) PROVIDE A 1/4" NYLON PULL ROPE IN ALL CONDUITS.
15) FOR COMPLETE REQUIREMENTS, SEE "NEW CONSTRUCTION INFORMATION" BOOKLET AND "WATER SYSTEM CONSTRUCTION STANDARDS (REVISED MARCH, 2001."

3 / C7.4 TYPICAL JOINT TRENCH
N.T.S

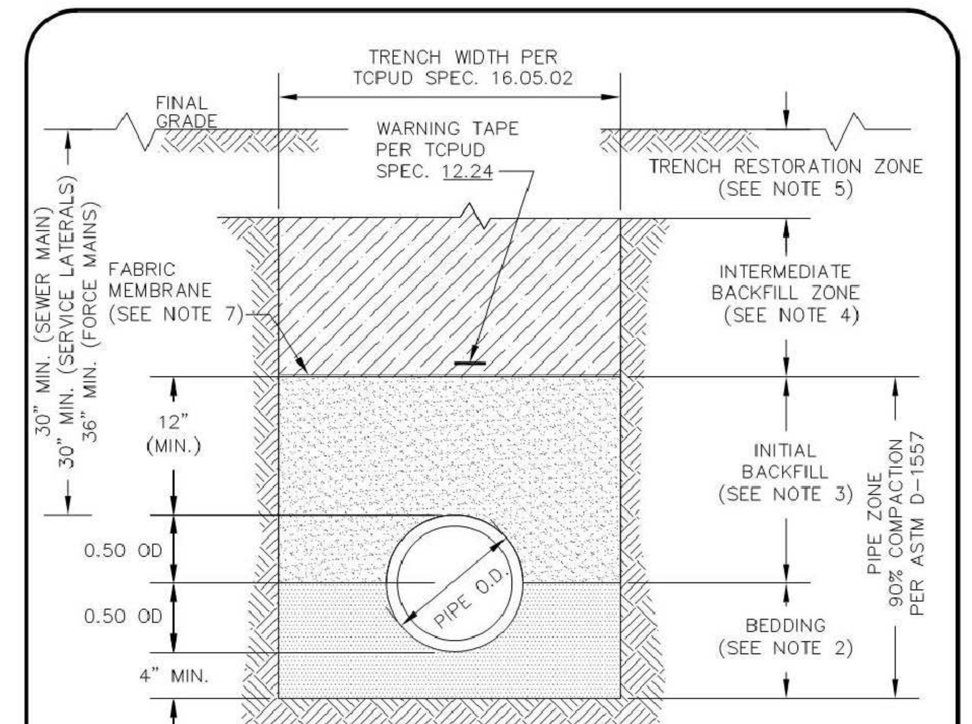

NOTES:
1. TRENCH EXCAVATION PER PROJECT TECHNICAL SPECIFICATIONS, TCPUD SPEC. 16.05.
2. BEDDING MATERIAL SELECTION PER PROJECT TECHNICAL SPECIFICATIONS, TCPUD SPEC. 16.08. PLACEMENT PER PROJECT TECHNICAL SPECIFICATIONS, TCPUD SPEC. 16.07. PLACEMENT RESTRICTIONS PER TCPUD SPEC. 16.10.04.
3. INITIAL BACKFILL PER PROJECT TECHNICAL SPECIFICATIONS, TCPUD SPEC. 16.09.
4. INTERMEDIATE BACKFILL PER PROJECT TECHNICAL SPECIFICATIONS, TCPUD SPEC. 16.10, AND AS APPLICABLE TCPUD SPEC. 16.10.01, 16.10.02 OR 16.10.03.
5. TRENCH SURFACE RESTORATION PER EL DORADO COUNTY OR PLACER COUNTY REQUIREMENTS AS APPLICABLE.
6. WHERE REFERENCED REQUIREMENTS CONFLICT, THE MOST RESTRICTIVE REQUIREMENT SHALL GOVERN.
7. GEOTEXTILE MEMBRANE PER PROJECT TECHNICAL SPECIFICATIONS, TCPUD SPEC. 15.16.
8. TRENCH WALLS SHOWN VERTICAL FOR CLARITY, EXCAVATE PER O.S.H.A. REQUIREMENTS.

SCALE: N.T.S.

Tahoe City Public Utility District
P.O. BOX 5249
TAHOE CITY, CA. 96145

STD. SEWER PIPE BEDDING AND BACKFILL

DWG. No. SS-09 OCTOBER, 2004
APPROVED:
DISTRICT ENGINEER RCE 49193

5 / C7.4 STANDARD SEWER PIPE BEDDING AND INITIAL BACKFILL (TCPUD SS-09)
N.T.S

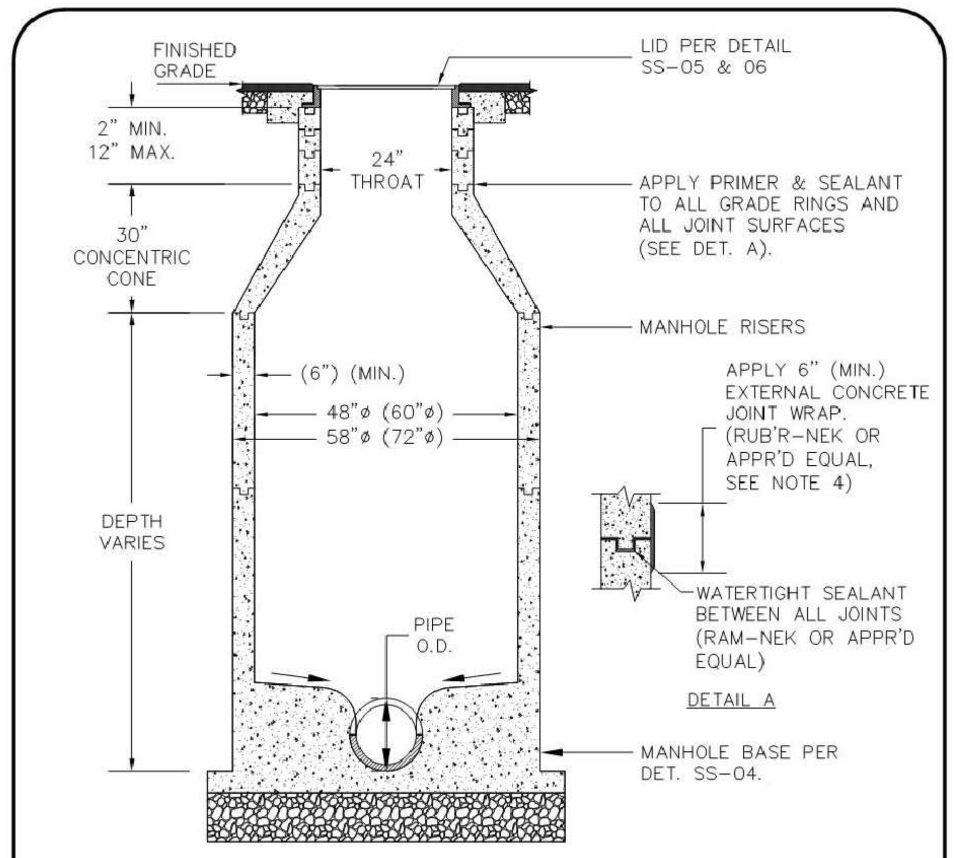

NOTES:
1. CONCENTRIC OR ECCENTRIC CONES PERMITTED.
2. AT LEAST ONE 2-INCH GRADE RING TO BE INSTALLED ON TOP OF CONE FOR MANHOLES WITHIN PAVED AREAS.
3. STRUCTURAL BACKFIL AT 95% R.C. IN ALL STREETS. 90% R.C. IN OTHER AREAS.
4. EXTERNAL CONCRETE JOINT WRAP SHOWN ON EXTERIOR OF MANHOLE. EXTERNAL CONCRETE JOINT WRAP MAY ALSO BE PLACED ON INTERIOR OF MANHOLE AS APPROVED BY DISTRICT INSPECTOR.

SCALE: N.T.S.

Tahoe City Public Utility District
P.O. BOX 5249
TAHOE CITY, CA. 96145

STD. SEWER MANHOLE

DWG. No. SS-01 FEBRUARY, 2006
APPROVED:
DISTRICT ENGINEER RCE 49193

6 / C7.4 STANDARD SEWER MANHOLE (TCPUD SS-01)
N.T.S

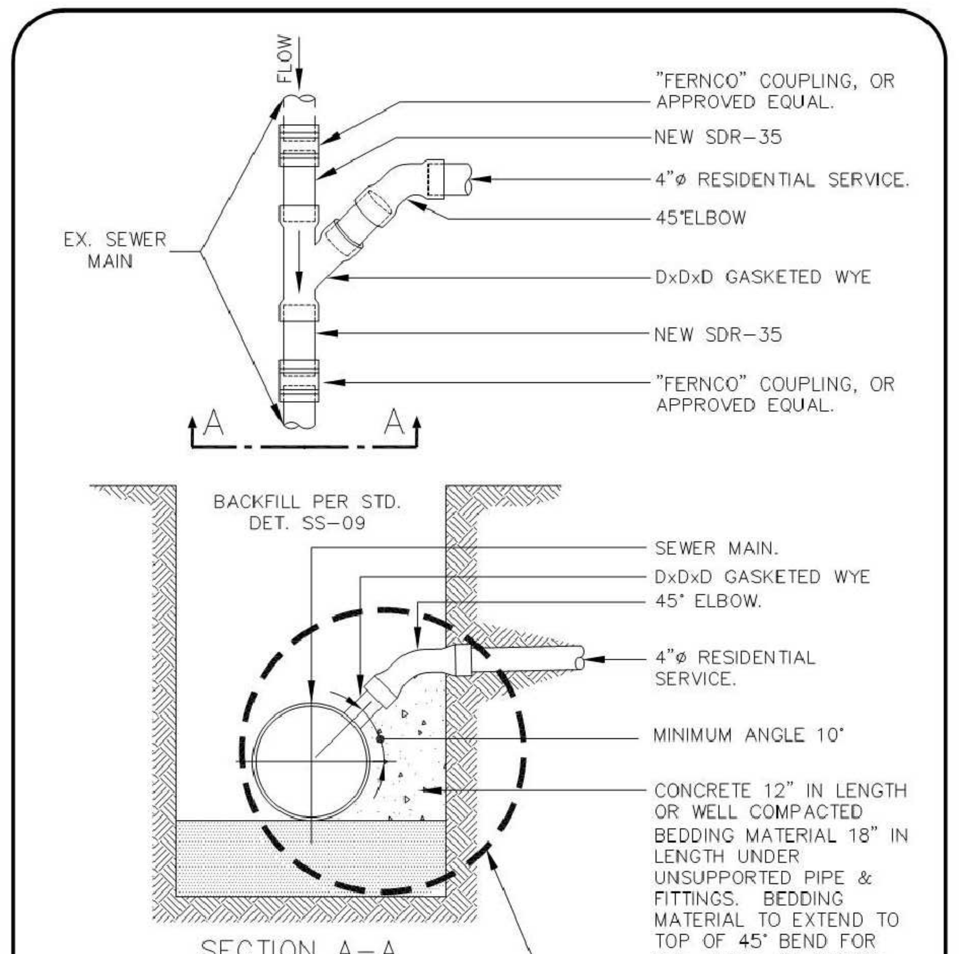

NOTES:
1. CONNECTION SHOWN IS FOR HOUSE SERVICE TAPS ONLY.
2. CONNECTION OF SEWER MAINS TO OTHER SEWER MAINS SHALL BE MADE BY CONSTRUCTION OF MANHOLE.

SCALE: N.T.S.

Tahoe City Public Utility District
P.O. BOX 5249
TAHOE CITY, CA. 96145

STD. SEWER MAIN TAP (RESIDENTIAL)

DWG. No. SS-14 OCTOBER, 2004
APPROVED:
DISTRICT ENGINEER RCE 49193

2 / C7.4 STANDARD HOUSE SERVICE SEWER MAIN TAP (TCPUD SS-14)
N.T.S

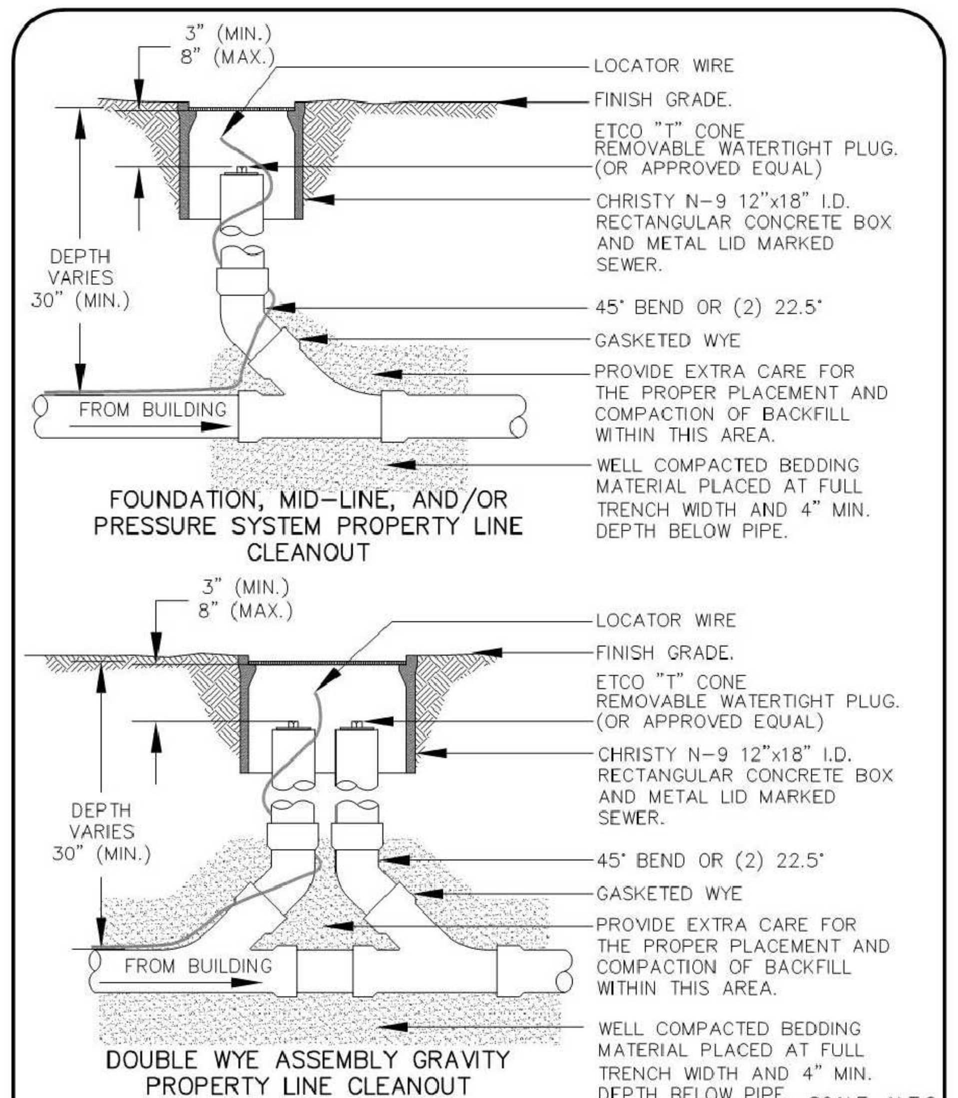

SCALE: N.T.S.

Tahoe City Public Utility District
P.O. BOX 5249
TAHOE CITY, CA. 96145

STD. CLEANOUT ASSEMBLY

DWG. No. SS-15 APRIL, 2005
APPROVED:
DISTRICT ENGINEER RCE 49193

4 / C7.4 STANDARD SEWER CLEANOUT ASSEMBLY (TCPUD SS-15)
N.T.S

Liberty Utilities

TRANSFORMER PAD MODEL 75/500
MEETS LIBERTY UTILITIES SPECS.
DRAWING NO. PE0003 U
STOCK NO. 24-0694

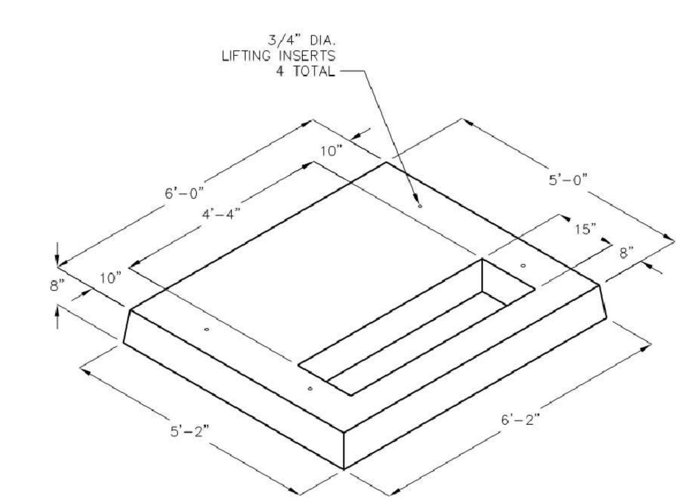

FOR COMPLETE DESIGN AND PRODUCT INFORMATION CONTACT JENSEN PRECAST.

9/16/2013
3U_TPAD_LIB_B.DWG
©2013

Jensen Precast reserves the right to make changes to product design and/or dimensions without notice. Please contact Jensen Precast whenever necessary for confirmation or advice on product design.

JENSEN PRECAST

7 / C7.4 TRANSFORMER PAD MODEL 75/500 #24-0694
N.T.S

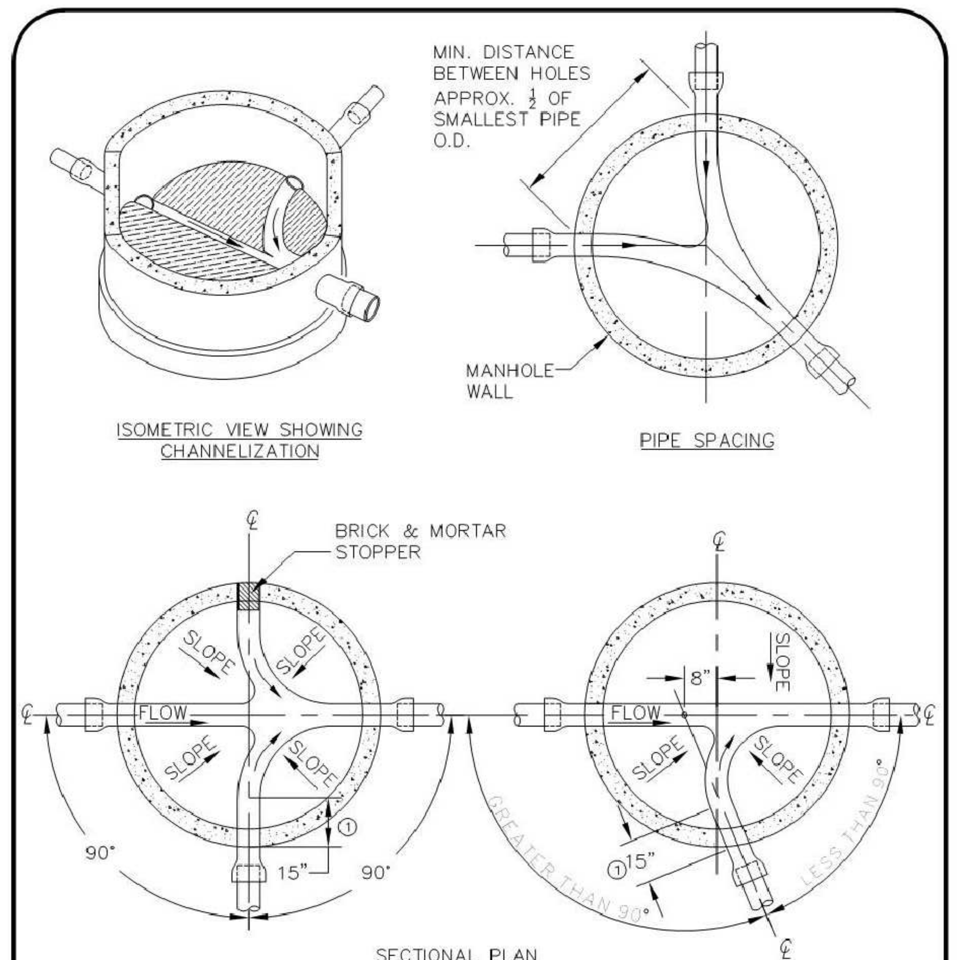

NOTES:
1. 15" MINIMUM STRAIGHT CLEARANCE REQUIRED FOR DISTRICT T.V. CAMERA.
2. PIPE MAY STOP AT INSIDE FACE OF MH OR BE CONTINUOUS THRU MH. FOR CONTINUOUS PLACEMENT, TOP HALF SHALL BE BROKE AWAY AFTER BASE IS POURED.

SCALE: N.T.S.

Tahoe City Public Utility District
P.O. BOX 5249
TAHOE CITY, CA. 96145

STD. SEWER MANHOLE CHANNELIZATION

DWG. No. SS-02 OCTOBER, 2004
APPROVED:
DISTRICT ENGINEER RCE 49193

8 / C7.4 STANDARD SEWER MANHOLE CHANNELIZATION (TCPUD SS-02)
N.T.S

REV.	DATE	DESCRIPTION	APPROVED	DATE
△				
△				
△				
△				
△				
△				
△				

OWNERS INFORMATION
6980 WEST LAKE, LLC
P.O. Box 430
Rancho Santa Fe, CA 92067

TIESLAU CIVIL ENGINEERING, INC.
3080 NORTH LAKE BLVD
TAHOE CITY, CA 96145
P.O. BOX 412
TAHOE VISTA, CA 96148
ATCIVIL.COM
(530) 546-4805

REGISTERED PROFESSIONAL ENGINEER
ADRIAN TIESLAU
No. 60323
CIVIL
STATE OF CALIFORNIA

CIVIL UTILITY DETAILS

TAHOE CEDARS

TAHOMA PLACER COUNTY CALIFORNIA

COMP:____ DESIGN:
DRWN: PRJ.ENG: AT

PROJECT #: 16.005
SCALE:
HORIZONTAL: N/A
VERTICAL:

DATE: 2-24-17

C7.4

TYPICAL SERVICE TRENCH DETAILS

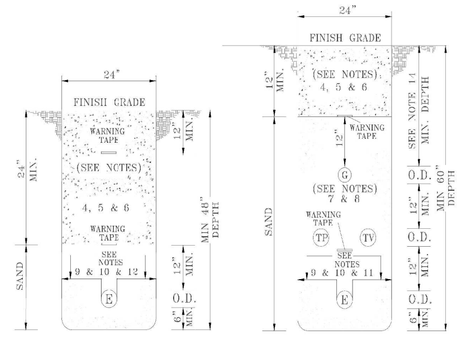

TYPICAL SECONDARY/SERVICE TRENCH ELECTRIC ONLY

TYPICAL SERVICE TRENCH JOINT TRENCH APPLICATION

ENGINEERING NOTES:

A. If utilities on this sheet are not in a joint trench as shown, raise trench depths and comply with minimum depths and clearances referenced in Typical Trench Details 1-19.

B. All trenches must be approved by LE prior to any construction.

C. In some cases, Gas Services may be run with electric primary. A special line type shall be used on the design drawings as well as on the distribution map indicating that electric primary is below the gas service line.

UTILITY DESINGNATION AND LEGEND

(TP) TELEPHONE (W) WATER
(TV) CABLE TV (E) ELECTRIC
(G) GAS

(O.D.) OUTSIDE DIAMETER

Liberty Energy

DRAWN	DESIGN	SLPR.	DATE	REV.
BSP	MB	DA	3/06	03

ENGINEERING & CONSTRUCTION STANDARD — TYPICAL TRENCH DETAILS — SHEET 33 OF 50 — VOLUME 17 — DRAWING NUMBER TE0003U

NOTE: WATER LOCATION IS SUBJECT TO TCPUD SEPARATION CRITERIA

1 / C7.5 LIBERTY UTILITIES TYPICAL TRENCH DETAIL
N.T.S

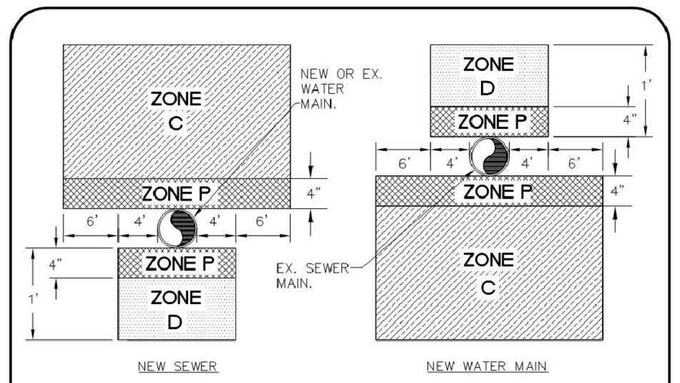

PERPENDICULAR CONSTRUCTION CROSSING

ZONE	NEW SEWER	NEW WATER
C/D	1. D.I.P. W/ MECHANICAL COMPRESSION JOINTS. 2. PVC, CLASS 200, CONTINUOUS SECTION CENTERED OVER PIPE CROSSING.	1. CONCRETE ENCASEMENT OF SEWER PER SS-08. 2. D.I.P. CLASS 200 WATER MAIN WITH HOT DIP BITUMINOUS COATING. 3. PVC, CLASS 200 WITH RUBBER RING JOINTS.
P	PROHIBITED ZONE PER SECTION 64630 (E)(2), CALIFORNIA ADMINISTRATIVE CODE, TITLE 22.	

NOTES:
1. SEWER MAINS WHICH MUST CROSS A PRESSURE WATER MAIN WITHIN ZONES C OR D, OR A HOUSE LATERAL WHICH MUST CROSS IN ZONE C, SPECIAL CONSTRUCTION WILL BE REQUIRED AS SHOWN ABOVE.
2. FORCE SEWER MAINS ARE NOT PERMITTED IN ZONE C, AND IN ZONE D ONLY WITH APPROVAL OF THE DISTRICT ENGINEER.
3. SEPARATION REQUIREMENTS SHALL BE IN ACCORDANCE WITH THE LATEST UPDATE FROM THE STATE OF CALIFORNIA, DEPT. OF HEALTH SERVICES.

SCALE: N.T.S.

Tahoe City Public Utility District, P.O. BOX 5249, TAHOE CITY, CA. 96145 — STD. VERTICAL PIPELINE SEPARATION — DWG. No. SS-11 — JANUARY, 2019 — APPROVED: — DISTRICT ENGINEER RCE 49193

2 / C7.5 LIBERTY UTILITIES TYPICAL TRENCH DETAIL
N.T.S

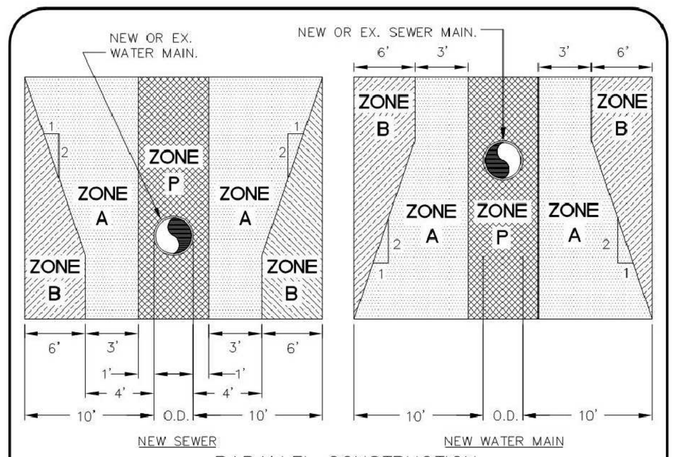

PARALLEL CONSTRUCTION

ZONE	NEW SEWER	NEW WATER
B	PVC, SDR-35	DUCTILE IRON PIPE CL. 200 WITH HOT BITUMINOUS COATING.
A	NO CONSTRUCTION WITHOUT APPROVAL OF DISTRICT ENGINEER AND DEPARTMENT OF PUBLIC HEALTH.	
P	PROHIBITED ZONE PER SECTION 64630 (E)(2), CALIFORNIA ADMINISTRATIVE CODE, TITLE 22.	

NOTES:
1. SEWER MAIN WHICH MUST BE LOCATED WITHIN ANY OF THE ZONES DEPICTED IN THE DIAGRAMS ABOVE WILL REQUIRE SPECIAL CONSTRUCTION AS SHOWN.
2. FORCE SEWER MAINS ARE NOT PERMITTED IN ZONES A OR B
3. HORIZONTAL DISTANCE BETWEEN WATER MAIN AND SEWER MAIN SHALL BE A MINIMUM CLEAR DISTANCE OF 10 FEET.
4. SEPARATION REQUIREMENTS SHALL BE IN ACCORDANCE WITH THE LATEST UPDATE FROM THE STATE OF CALIFORNIA, DEPT OF HEALTH SERVICES.

SCALE: N.T.S.

Tahoe City Public Utility District, P.O. BOX 5249, TAHOE CITY, CA. 96145 — STD. HORIZONTAL PIPELINE SEPARATION — DWG. No. SS-12 — OCTOBER, 2004 — APPROVED: — DISTRICT ENGINEER RCE 49193

3 / C7.5 LIBERTY UTILITIES TYPICAL TRENCH DETAIL
N.T.S

Oldcastle Enclosure Solutions — Electric & Communications — CHRISTY Concrete

N36

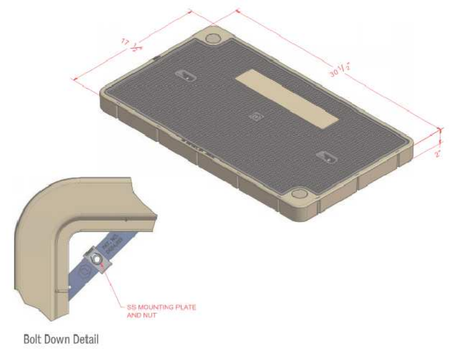

COVER:	
Style:	Flush
Material:	Composite with UV Inhibitor
Model:	17" x 30"
Weight:	76 lbs
Options:	Special Markings
Surface:	Skid Resistant & Marked*
Coefficient of Friction:	>0.6 ASTM 1028
Performance:	ASTM C 857, WUC 3.6
BODY:	
Material:	Reinforced Concrete with Composite Cap
Model:	25" x 35"
Weight:	172 lbs
Wall Type:	Straight
Mouseholes:	0 - 2
Performance:	ASTM C 857, WUC 3.6
EXTENSION:	
Material:	Reinforced Concrete
Depth:	12"
Weight:	189 lbs

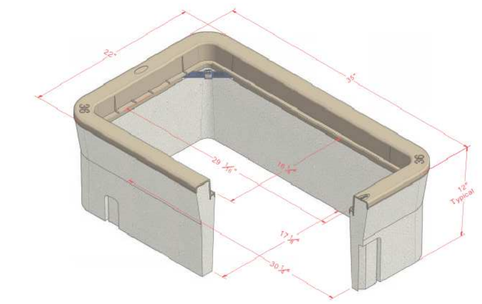

Light Duty: Pedestrian Only

*Cover comes standard with permanent markings for manufacturer, load rating, model size and manufacturing location.

Contact your Oldcastle Enclosure Solutions Distribution Center for specific information and additional options.

Actual load rating is determined by the box and cover combination. Weights and dimensions may vary slightly.

oldcastleprecast.com/enclosuresolutions — 800-735-5566

Revision 8/2016 — ©2016 Oldcastle, Inc.

4 / C7.5 LIBERTY UTILITIES TYPICAL TRENCH DETAIL
N.T.S

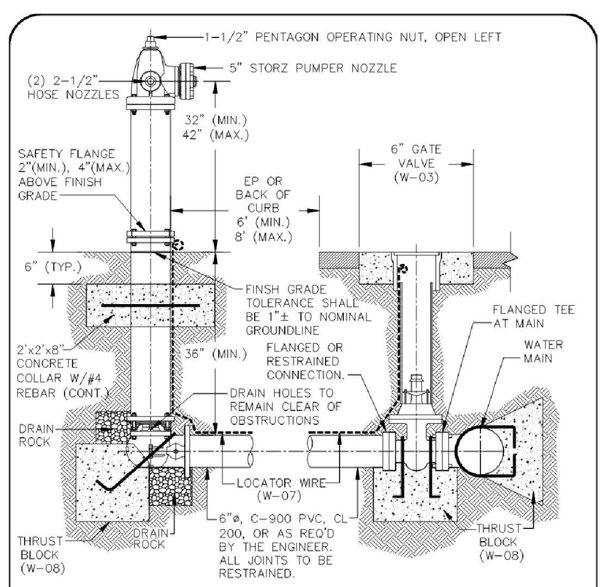

NOTES
1. FIRE HYDRANT SHALL BE WATEROUS 5-1/4" PACER TRAFFIC TYPE (W67-250 DDP), WITH 5" STORZ PUMPER CONNECTION, OR APPROVED EQUAL.
2. HYDRANT BASE TO BE 6" MECHANICAL JOINT OR 6" FLANGED CONNECTION.
3. PAINT AND COATING PER AWWA C-502 "FEDERAL SAFETY YELLOW".
4. ALL JOINT CONNECTIONS SHALL BE RESTRAINED.
5. PLACE 0.25 CY DRAIN ROCK BELOW HYDRANT BASE DRAIN HOLES.
6. SEE STD. DET. W-02 FOR BOLLARD INSTALLATION (IF REQ'D).

SCALE: N.T.S

Tahoe City Public Utility District, P.O. BOX 5249, TAHOE CITY, CA. 96145 — STD. FIRE HYDRANT — DWG. No. W-01 — DECEMBER, 2006 — APPROVED: — DISTRICT ENGINEER RCE 49193

5 / C7.5 FIRE HYDRANT DETAIL (TYPICAL)
N.T.S

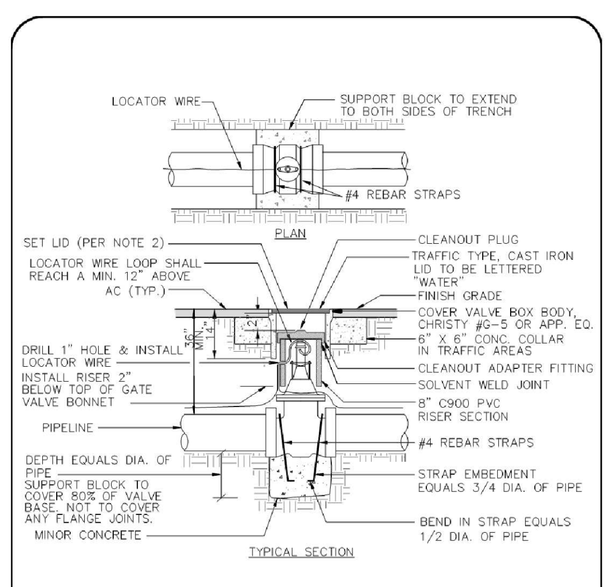

NOTES:
1. SUPPORT BLOCK TO BE POURED AGAINST UNDISTURBED SOIL. VALVE EXTENSION REQ'D FOR VALVE STEMS LOWER THAN 18" BELOW GRADE.
2. PAVED AREAS: 1/2" BELOW GRADE; SHOULDER AREAS: 4" BELOW GRADE; OTHER AREAS: 1" BELOW GRADE
3. VALVE TYPE AS SHOWN ON PLANS

SCALE: N.T.S.

Tahoe City Public Utility District, P.O. BOX 5249, TAHOE CITY, CA. 96145 — STD. VALVE AND VALVE BOX INSTALLATION — DWG. No. W-03 — OCTOBER, 2004 — APPROVED: — DISTRICT ENGINEER RCE 49193

6 / C7.5 GATE VALVE DETAIL
N.T.S

SOUTHWEST GAS CORPORATION

TRENCH SPECIFICATIONS

If the gas line is to be alone in the trench, the MINIMUM dimensions should be:

Service Line (on property): 32" deep x 12" wide
Main Line (off site): 44" deep x 12" wide

In cases where the builder would like to put other utilities in the same trench with gas, the trench MUST be provided, with the gas line installed last. MINIMUM dimensions should be:

Service Line (on property): 43" deep x 12" wide
Main Line (off site): 56" deep x 12" wide

GUIDELINES FOR JOINT TRENCH

1. All depths are from FINISHED or FINAL grade.
2. Trenching should be done parallel or at the right angle to property lines for right-of-way whenever possible.
3. Spoil should be a minimum of two feet from the trench.
4. Gas lines and sewer lines CANNOT share a trench.
5. A MINIMUM clearance of 12" is required between all utilities. Clearance may be horizontal or vertical.
6. Gas MUST be the last utility in the trench.
7. Some water companies will not allow their facilities to share a trench with gas. Contact your water company to confirm their policy.
8. Southwest Gas provides 6" of bedding and shading material.
9. The excavator is responsible for backfill, compaction, pavement or concrete cuts and repairs, permits, and BLUE STAKE unless otherwise agreed upon.

Attachment #2

7 / C7.5 SOUTHWEST GAS TRENCH DETAIL AND SPECS
N.T.S

SOUTHWEST GAS CORPORATION

GUIDELINES FOR METER SET ASSEMBLIES - RESIDENTIAL

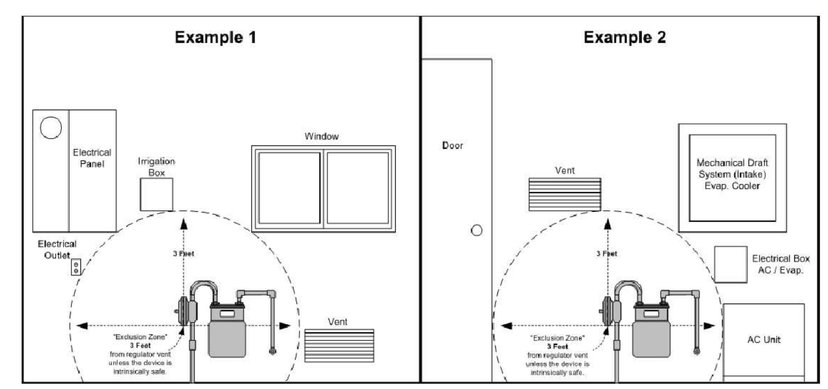

8 / C7.5 SOUTHWEST GAS RESIDENTIAL GAS METER DETAIL
N.T.S

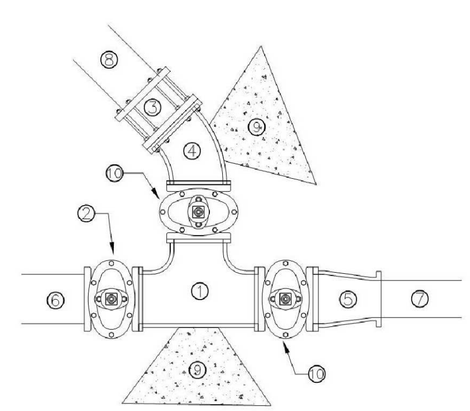

KEYNOTES

1. 8"x8"x8" TEE (FLxFLxFL).
2. 8" GATE VALVE (FLxMJ) WITH 6"ø C900, DR14 PVC RISER & MONITOR-WELL LOCKING PLUG PER DETAIL W-03.
3. 8" RESTRAINED FLANGE COUPLING ADAPTER (RFCA).
4. 8" - 45° ELBOW (FLxMJ)
5. 8"x6" REDUCER (FLxMJ) OR FLxFL WITH FCA
6. EXISTING 8" WATER MAIN
7. EXISTING 6" WATER MAIN
8. 8" WATER MAIN
9. THRUST BLOCK PER DETAIL W-08
10. 8" GATE VALVE (FLxFL) WITH 6"ø C900, DR14 PVC RISER & MONITOR-WELL LOCKING PLUG PER DETAIL W-03.

9 / C7.5 THREE VALVE CLUSTER
N.T.S

REV.	DATE	DESCRIPTION	APPROVED	DATE

OWNERS INFORMATION
6980 WEST LAKE, LLC
P.O. Box 430
Rancho Santa Fe, CA 92067

TIESLAU CIVIL ENGINEERING, INC.
3080 NORTH LAKE BLVD
TAHOE CITY, CA 96145
P.O. BOX 412
TAHOE VISTA, CA 96148
ATCIVIL.COM
(530) 546-4805

REGISTERED PROFESSIONAL ENGINEER — ADRIAN TIESLAU — No. 60323 — CIVIL — STATE OF CALIFORNIA

CIVIL UTILITY DETAILS
TAHOE CEDARS
TAHOMA — PLACER COUNTY — CALIFORNIA

COMP: ____ DESIGN:
DRWN: PRJ.ENG: AT

PROJECT #: 16.005
SCALE:
HORIZONTAL: N/A
VERTICAL:

DATE: 2-24-17

C7.5

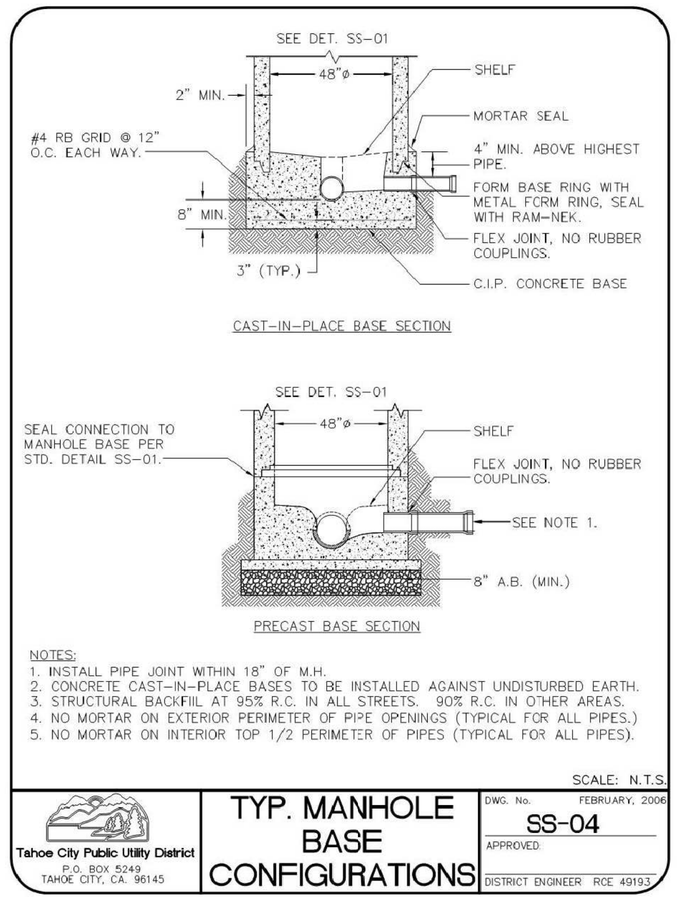

1 C7.6 TYPICAL MANHOLE BASE CONFIGURATIONS (TCPUD SS-04)
N.T.S

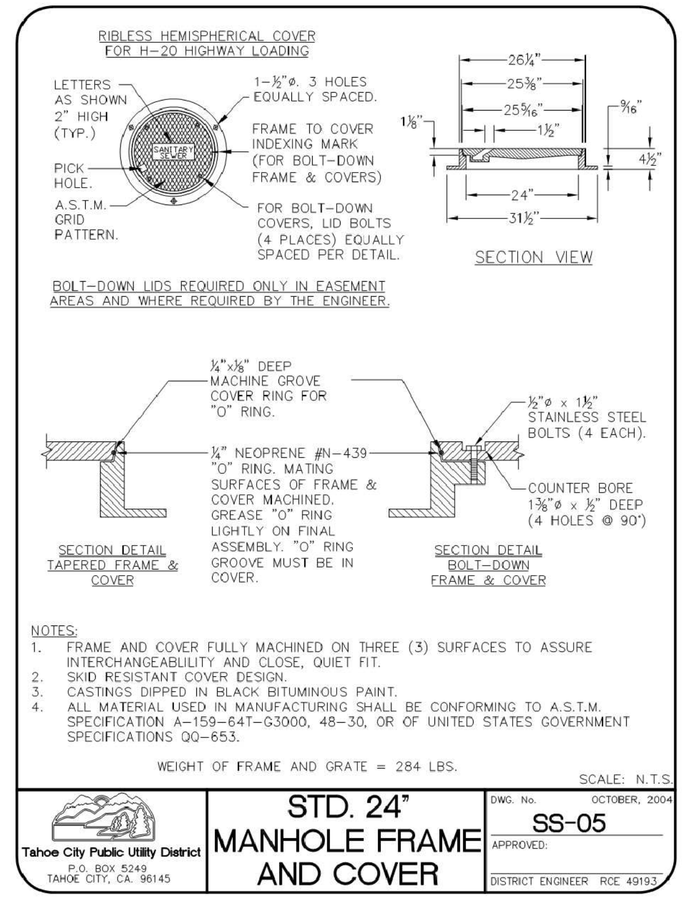

2 C7.6 STANDARD 24" MANHOLE FRAME AND COVER (TCPUD SS-05)
N.T.S

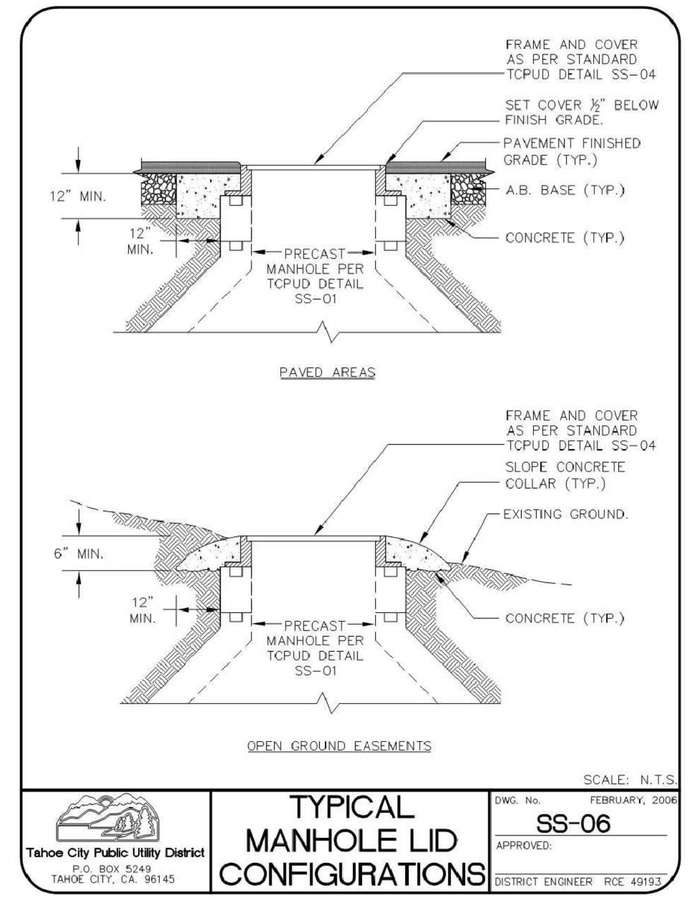

3 C7.6 TYPICAL MANHOLE LID CONFIGURATIONS (TCPUD SS-06)
N.T.S

KEYNOTES

1. 8" MODEL FSAA-01 FM APPROVED-175 PSI FLANGED UL LISTED FIRE SERIES METER ASSEMBLY WITH STRAINER, TURBINE METER, CHECK VALVE AND DISC BY-PASS METER.
2. JENSEN PRECAST 4878 WITH RING AND COVER OR APPROVED EQUAL. PLACE ON 1 FT. (MIN.) DRAIN ROCK ON SUBGRADE PREPARED TO 95% RELATIVE COMPACTION (ASTM D1557)
3. 8" GATE VALVE (FL) PER DETAIL W-03.
4. 8" GATE VALVE (FLxMJ) WITH 6"ø C900, DR14 PVC RISER & MONITOR-WELL LOCKING PLUG PER DETAIL W-03.
5. 8" RESTRAINED FLANGE COUPLING ADAPTER (RFCA) OR MECHANICAL JOINT RESTRAINT GLAND.
6. 8" ROMAC "FCA501" FLANGED COUPLING ADAPTER APPROPRIATE FOR PIPE MATERIAL (OR APPROVED EQUAL).
7. 8"x8"x8" TEE (FLxFLxMJ)
8. 8" - 90° ELBOW (FLxFL)
9. 8"ø DUCTILE IRON PIPE (FLANGED OR FLxOPEN END - LENGTH TO BE DETERMINED IN THE FIELD).
10. 8"ø DUCTILE IRON PIPE (FLANGED BY OPEN END).
11. 8" BYPASS. (PVC or DIP)
12. EXISTING 8" WATER SERVICE.
13. THRUST BLOCK PER DETAIL W-08
14. 8" ROMAC "FCA501" FLANGED COUPLING ADAPTER APPROPRIATE FOR PIPE MATERIAL (OR APPROVED EQUAL).
15. NIBCO PIPE AND METER SUPPORTS PER MANUFACTURERS RECOMMENDATIONS (OR APPROVED EQUAL).

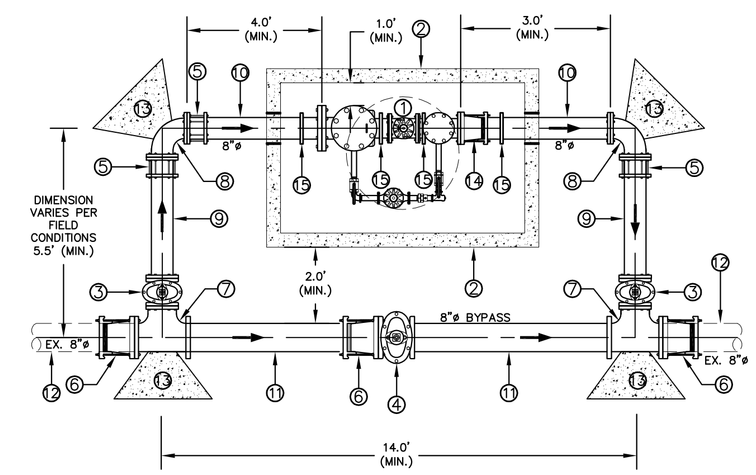

PLAN VIEW

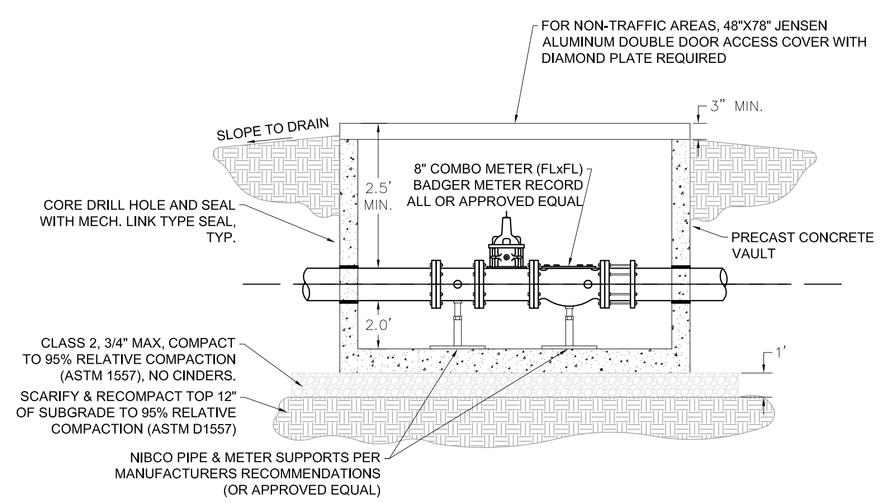

PROFILE

7 C7.6 COMBINATION WATER METER PLAN & PROFILE
N.T.S

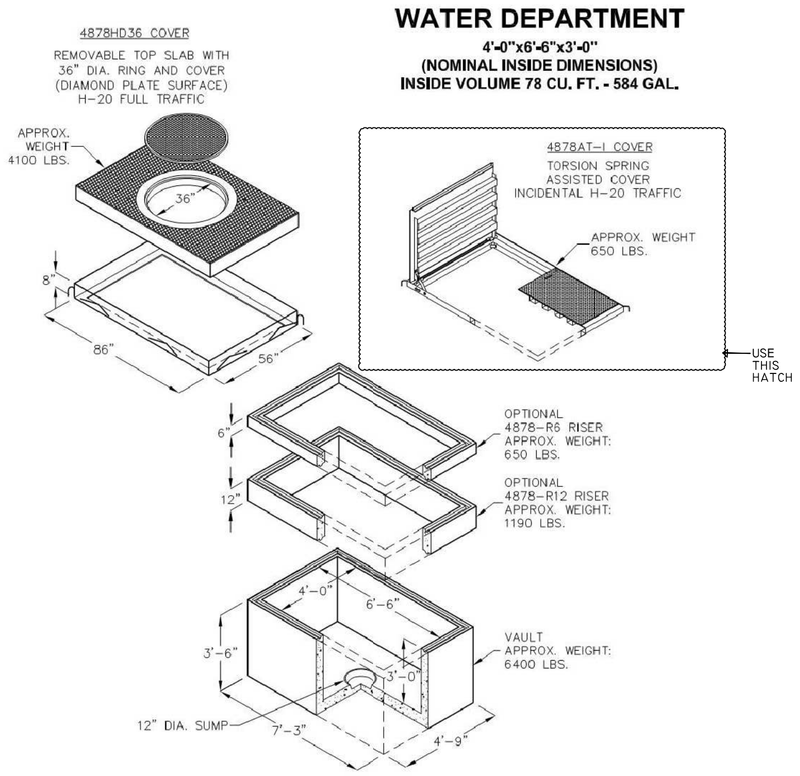

NOTES:
1. ONE 12" RISER MUST BE USED TO OBTAIN AN INTERNAL HEIGHT OF 4.5'

2. THE COVER SHALL BE A JENSEN 48"X78" ALUMINUM ACCESS COVER WITH DIAMOND PLATE DOUBLE DOORS AND TORSION SPRING ASSIST.

4 C7.6 JENSEN WATER VAULT
N.T.S

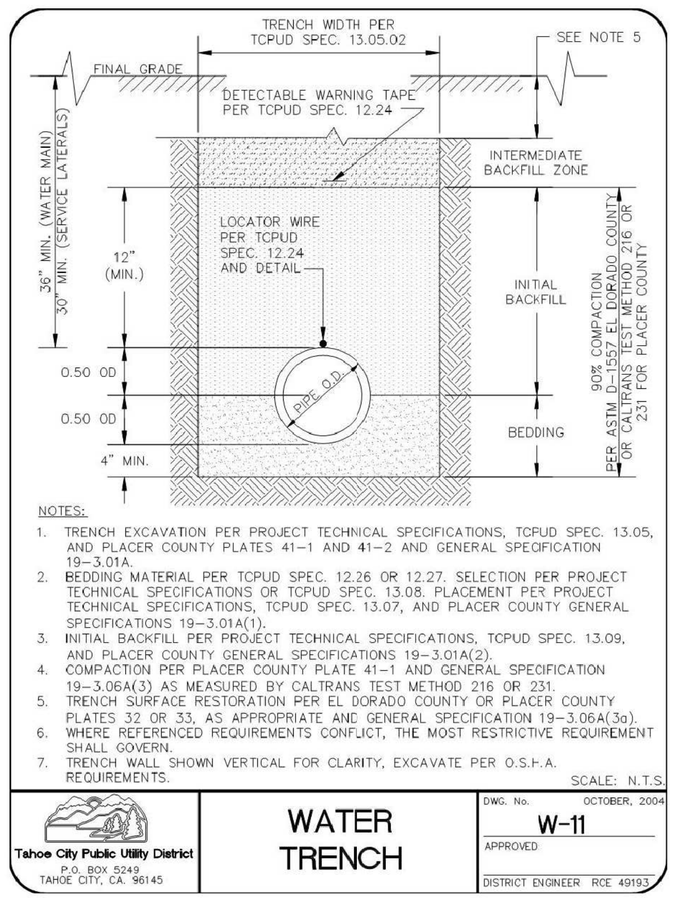

5 C7.6 WATER TRENCH (TCPUD W-11)
N.T.S

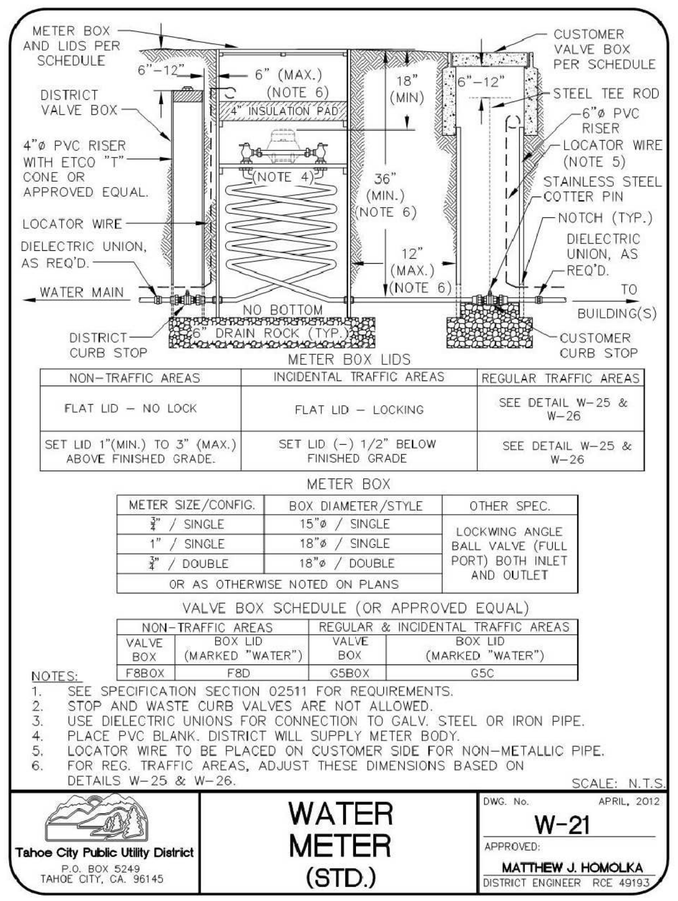

NON-TRAFFIC AREAS	INCIDENTAL TRAFFIC AREAS	REGULAR TRAFFIC AREAS
FLAT LID - NO LOCK	FLAT LID - LOCKING	SEE DETAIL W-25 & W-26
SET LID 1"(MIN.) TO 3" (MAX.) ABOVE FINISHED GRADE.	SET LID (-) 1/2" BELOW FINISHED GRADE	SEE DETAIL W-25 & W-26

METER SIZE/CONFIG.	BOX DIAMETER/STYLE	OTHER SPEC.
¾" / SINGLE	15"ø / SINGLE	LOCKWING ANGLE BALL VALVE (FULL PORT) BOTH INLET AND OUTLET
1" / SINGLE	18"ø / SINGLE	
¾" / DOUBLE	18"ø / DOUBLE	
OR AS OTHERWISE NOTED ON PLANS		

NON-TRAFFIC AREAS		REGULAR & INCIDENTAL TRAFFIC AREAS	
VALVE BOX	BOX LID (MARKED "WATER")	VALVE BOX	BOX LID (MARKED "WATER")
F8BOX	F8D	G5BOX	G5C

6 C7.6 STANDARD WATER METER (TCPUD W-21)
N.T.S

REV.	DATE	DESCRIPTION	APPROVED	DATE

OWNERS INFORMATION
6980 WEST LAKE, LLC
P.O. Box 430
Rancho Santa Fe, CA 92067

TIESLAU CIVIL ENGINEERING, INC.
3080 NORTH LAKE BLVD
TAHOE CITY, CA 96145
P.O. BOX 412
TAHOE VISTA, CA 96148
ATCIVIL.COM
(530) 546-4805

REGISTERED PROFESSIONAL ENGINEER ADRIAN TIESLAU No. 60323 CIVIL STATE OF CALIFORNIA

CIVIL UTILITY DETAILS
TAHOE CEDARS
TAHOMA PLACER COUNTY CALIFORNIA

COMP: DESIGN:
DRWN: PRJ.ENG: AT

PROJECT #: 16.005
SCALE:
HORIZONTAL: N/A
VERTICAL:

DATE: 2-24-17

C7.6

GRAPHIC SCALE

−10 0 10 20 40

SCALE 1"=20'

TOPOGRAPHIC SURVEY, SHOWN HEREON, WAS PREPARED BY ANDREGG GEOMATICS, DATED MAY 6, 2015.
ELEVATION DATUM: TAHOE DATUM

LEGEND

- PROPERTY LINE
- 6274 CONTOUR ELEVATION
- ×6270.5 SPOT ELEVATIONS
- 24"F TREE SIZE AND TYPE
- EXISTING STRUCTURE
- EDGE OF PAVEMENT
- FENCE
- DIRT PATH

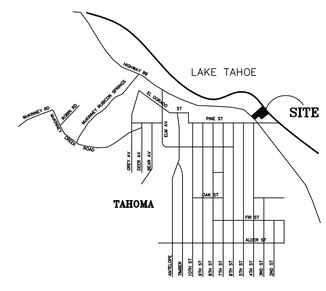

SECTION8, TOWNSHIP 14N & RANGE 17E

VICINITY MAP
NTS

TENTATIVE MAP STATEMENT

I HEARBY STATE THAT THIS TENTATIVE MAP ACCURATELY DEPICTS THE LOCATION, WIDTH, TYPE AND RECORDING INFORMATION OF ALL RECORD EASEMENTS IN THE PRELIMINARY TITLE REPORT ISSUED BY FIRST AMERICAN TITLE CO, ORDER NO. 3420-5206917 DATED JUNE 13, 2016. ALL EASEMENTS PROPOSED TO BE ABANDONED OR EXTINGUISHED ARE IDENTIFIED. EASEMENTS THAT CANNOT BE LOCATED FROM RECORD INFORMATION ARE LISTED IN THE NOTES.

DEAN JOHNSON, PLS 4878 DATE

SHEET 1 OF 3

REV	DATE	DESCRIPTION	APPROVED	DATE

OWNERS INFORMATION
6980 WEST LAKE, LLC
P.O. Box 430
Rancho Santa Fe, CA 92067

TIESLAU CIVIL ENGINEERING, INC.
3080 NORTH LAKE BLVD
TAHOE CITY, CA 96145
P.O. BOX 412
TAHOE VISTA, CA 96148
ATCIVIL.COM
(530) 546-4805

PROFESSIONAL LAND SURVEYOR
G.D. JOHNSON II
No. 4878
Exp. 9/30/18
STATE OF CALIFORNIA

EXISTING CONDITIONS
VESTING TENTATIVE SUBDIVISION MAP
TAHOE CEDARS

6980 WEST LAKE BLVD
PLANNED DEVELOPMENT

JUNE 2016 PLN 16-00067 APN 98-210-30/31
TAHOMA PLACER COUNTY CALIFORNIA

COMP:____ DESIGN:
DRWN: PRJ.ENG: AT

PROJECT #: 16.005
SCALE:
HORIZONTAL: N/A
VERTICAL:

DATE: 2-24-17

TM.1

LEGEND

- EXTERIOR BOUNDARY
- ROOF LINE
- AC PAVED DRIVEWAY
- PAVERS (DRIVEWAY)

TCPUD TAHOE CITY PUBLIC UTILITY DISTRICT

PARKING CALCULATIONS:

2 PARKING SPACES PER RESIDENCE REQ'D
6 UNITS X 2 SPACES = 12 SPACES REQ'D
12 SPACES PROVIDED

NOTE:

1. EXHIBIT BASED ON TOPOGRAPHIC AND BOUNDARY SURVEY PROVIDED BY ANDREGG GEOMATICS, INC.
2. TITLE REPORT ITEM NO. 5, GRANT TO THE STATE OF CALIFORNIA, OCTOBER 25, 1926, FOR HIGHWAY PURPOSES, DOES PERTAIN TO THIS PROPERTY.
3. OFFSITE IMPROVEMENTS (WITHIN STATE HIGHWAY 89) WILL NOT REQUIRE EASEMENTS FROM CALTRANS. A PRIVATE 10' WIDE WATER LINE EASEMENT ACROSS APN 98-210-35 WILL BE ACQUIRED BY SEPARATE DOCUMENT.
4. LEGAL ACCESS TO THE PROPOSED LOTS WILL BE VIA THE COMMON AREA AS SPECIFIED IN THE C.C.R.S. AND THE FINAL MAP.
5. PUBLIC UTILITY, PUBLIC SUPPORT, AND EMERGENCY ACCESS EASEMENTS WILL BE PROVIDED ON THE FINAL MAP PER THE UTILITY DISTRICT'S AND/OR SERVICE PROVIDER'S REQUIREMENTS.
6. A COVENANT OR RESTRICTION SHALL BE PLACED ON THE INDIVIDUAL LOTS RESTRICTING THE AREA OUTSIDE OF THE BUILDING FOOTPRINTS TO BE MAINTAINED ESSENTIALLY AS OPEN SPACE WITHOUT STRUCTURAL IMPROVEMENTS.

OPEN SPACE CALCULATION

TOTAL PROJECT AREA (TO HIGH WATER)= 60,140 SF (1.38 AC)

AREA OF LOTS= LOT 1 (4,720 SF) + LOT 2 (4,078 SF) + LOT 3 (5,351 SF) + LOT 4 (4,554 SF) + LOT 5 (4,888 SF) + LOT 6 (3,536 SF) = 27,127 SF

AREA OF MULTI-PURPOSE EASEMENT = 1,285 SF

AREA OF ACCESS DRIVEWAY = 8,708 SF

OPEN SPACE % (EXCLUDING DRIVE) = 23,020 SF / 60,140 SF = 38.3 %

FOR STRUCTURAL SETBACKS REFER TO CIVIL SHEETS

NOTE:

"NO ONSTREET PARKING" SIGNAGE TO BE INSTALLED ALONG ACCESS DRIVE.

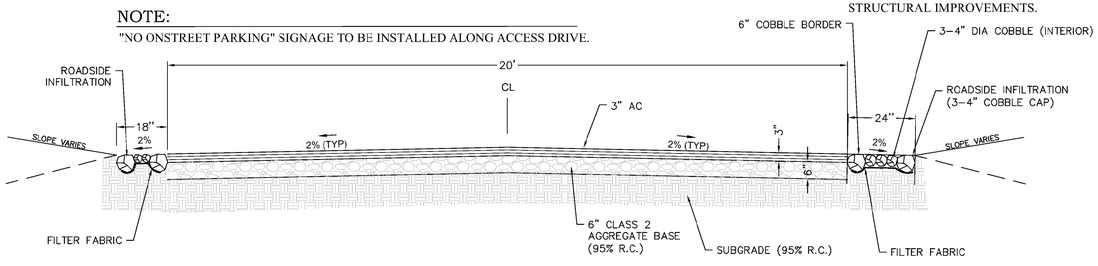

TYPICAL DRIVEWAY SECTION
NOT TO SCALE

6980 West Lake, LLC Properties

Placer County Environmental Questionnaire
6980 West Lake Boulevard, Tahoma, California
Placer County APN's: 098-210-030 & 031

Planned Resicential Developments (PDs) Ordinance
Density and Development Standards Calculations

Permitted Density

The propsed density is approximately half of the permissible density at the site, with 6 units proposed whereas a maximum of 11 could be allowed

Base Zone: TRPA Plan Area Statement 154 Tahoma Residential Area.
Parcel Size: Equals 60,140 square feet (1.38 acres).
Roadway Easements: There are no roadways proposed for dedication, all access will be from privately maintained driveways.
Net Buildable Area Equals 60,140 square feet or 1.38 acres.
Maximum Density: 11 units (8 units/acre x 1.38 acres =11.04).
Number of Proposed Units: 6 single-family residential units.
Proposed Density: 4 units per acre (6 units divided by 1.38-acres equals 4.35).
Allowed Density: 11 single family residential units.

Open Space and Maximum Coverage
Under Placer County Zoning Ordirance Section 17.54.100(A)(2) the minimum open space and maximum land coverage requirements for this this project are as follows:
Minimum Open Space(%): 20-percent
Maximum Coverage(%): 35-percent
The project proposes the following in accordance with the base zoning of

- Proposed Open Space (excluding Common Paving & Circulation): 38.3%
- Proposed Coverage (buildings only) = 17,702 SF (29.4%)

TENTATIVE MAP STATEMENT

I HEARBY STATE THAT THIS TENTATIVE MAP ACCURATELY DEPICTS THE LOCATION, WIDTH, TYPE AND RECORDING INFORMATION OF ALL RECORD EASEMENTS IN THE PRELIMINARY TITLE REPORT ISSUED BY FIRST AMERICAN TITLE CO, ORDER NO. 3420-5206917 DATED JUNE 13, 2016. ALL EASEMENTS PROPOSED TO BE ABANDONED OR EXTINGUISHED ARE IDENTIFIED. EASEMENTS THAT CANNOT BE LOCATED FROM RECORD INFORMATION ARE LISTED IN THE NOTES.

DEAN JOHNSON, PLS 4878 DATE

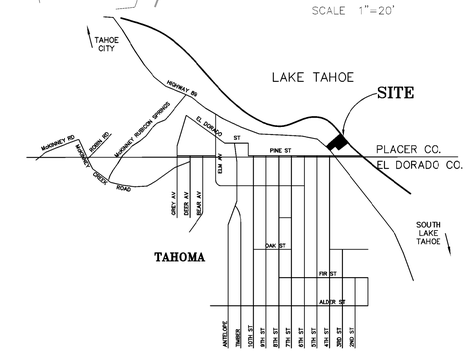

SECTION8, TOWNSHIP 14N & RANGE 17E

VICINITY MAP
NTS

SHEET 2 OF 3

REV	DATE	DESCRIPTION	APPROVED	DATE

OWNERS INFORMATION
6980 WEST LAKE, LLC
P.O. Box 430
Rancho Santa Fe, CA 92067

TIESLAU CIVIL ENGINEERING, INC.
3080 NORTH LAKE BLVD
TAHOE CITY, CA 96145
P.O. BOX 412
TAHOE VISTA, CA 96148
ATCIVIL.COM
(530) 545-4805

PROFESSIONAL LAND SURVEYOR G.D. JOHNSON II No. 4878 Exp. 9/30/16 STATE OF CALIFORNIA

PROPOSED DEVELOPMENT
VESTING TENTATIVE SUBDIVISION MAP
TAHOE CEDARS

6980 WEST LAKE BLVD
PLANNED DEVELOPMENT
JUNE 2016 PLN 16-00067 APN 98-210-30/31
TAHOMA PLACER COUNTY CALIFORNIA

COMP: DESIGN:
DRWN: PRJ.ENG: AT

PROJECT #: 16.005
SCALE:
HORIZONTAL: N/A
VERTICAL:

DATE: 2-24-17

TM.2

PUBLIC USE BEACH AREA AND LAKE ACCESS

DEAN JOHNSON, PLS 4878

DATE

SHEET 3 OF 3

REV	DATE	DESCRIPTION	APPROVED	DATE

OWNERS INFORMATION
6980 WEST LAKE, LLC
P.O. Box 430
Rancho Santa Fe, CA 92067

TIESLAU
CIVIL
ENGINEERING, INC.
3080 NORTH LAKE BLVD
TAHOE CITY, CA 96145
P.O. BOX 412
TAHOE VISTA, CA 96148
ATCIVIL.COM
(530) 545-4805

PROFESSIONAL LAND SURVEYOR
G.D. JOHNSON II
No. 4878
Exp. 9-30-16
STATE OF CALIFORNIA

OVERALL VIEW
VESTING TENTATIVE SUBDIVISION MAP
TAHOE CEDARS

6980 WEST LAKE BLVD
PLANNED DEVELOPMENT
JUNE 2016 PLN 16-00067 APN 98-210-30/31
TAHOMA PLACER COUNTY CALIFORNIA

COMP: DESIGN:
DRWN: PRJ.ENG: AT

PROJECT #: 16.005
SCALE:
HORIZONTAL: N/A
VERTICAL:

DATE: 2-24-17

TM.3

PLANTING

PLAN SCALE: 1" = 20'-0"

PLANT LEGEND

- EXISTING TREES
- JEFFREY PINE, INCENSE CEDAR
- ASPEN
- RED MAPLE, CRAB APPLE
- SERVICEBERRY, ELDERBERRY, WILLOW
- CURRANT, DOGWOOD, SPIREA
- NATIVE SEED MIX
- LAWN

NOTES:

1. ALL BARREN AREAS AND AREAS DISTURBED BY CONSTRUCTION SHALL BE REVEGETATED IN ACCORDANCE WITH THE TRPA HANDBOOK OF BEST MANAGEMENT PRACTICES, AND LIVING WITH FIRE, SECOND ADDITION, LAKE TAHOE BASIN
2. CONTRACTOR PLANT MATERIAL SUBSTITUTIONS ALLOWED BASED ON AVAILABILITY. ALL SUBSTITUTED PLANTS TO HAVE SIMILAR SIZE, GROWTH PATTERN, AND WATER NEEDS AS SPECIFIED PLANTS.
3. DISTURBED AREAS AND SLOPES SHALL BE REVEGETATED BY BROADCASTING SEED WITH UPLAND FULL SUN/DRY SITE SEED MIX .
4. ANY EXISTING TOPSOIL OR ORGANIC MATERIAL SHALL FIRST BE REMOVED FROM AREAS TO BE GRADED, AND STOCKPILED FOR LATER USE IN REVEGETATION OF AREAS DISTURBED OR COMPACTED BY HEAVY EQUIPMENT OR PREVIOUS USE. THE PERMITTEE IS RESPONSIBLE TO ACHIEVE 100% SLOPE STABILIZATION IN AREAS TO BE RESTORED AND IN AREAS THAT ARE DISTURBED AS A RESULT OF THIS PROJECT.
5. SOIL SHALL BE LOOSENED TO A DEPTH OF 6 INCHES AND THE STOCKPILED TOPSOIL SHALL BE INCORPORATED BY TILLING LONGITUDINAL AND PERPENDICULAR PASSES. BEFORE SEEDING A HARROW SHALL BE RUN PERPENDICULAR TO THE SLOPE OF IN BOTH DIRECTIONS ON FLAT AREAS.
6. USE A HAND OPERATED BROADCAST SEEDER AND SPREAD SEED IN A UNIFORM APPLICATION. RAKE IMMEDIATELY AFTER SEEDING TO A DEPTH OF 1/4" TO 1/2", SEED SHALL NOT BE LEFT UNCOVERED FOR MORE THAN 12 HOURS. SEEDING SHALL NOT TAKE PLACE IN WINDY CONDITIONS.
7. SEEDING IS TO BE DONE IN THE FALL PRIOR TO A LARGE WEATHER FRONT (SNOW FALL), OR BEFORE NOVEMBER 1.
8. CONTRACTOR TO USE SEED MIX PROVIDED ON THIS PLAN OR APPROVED EQUAL FROM TRPA .
9. FERTILIZER USE AND APPLICATION SHALL BE MINIMIZED. SLOW RELEASE ORGANIC FERTILIZERS ARE TO BE USED ONLY. ALL FERTILIZER SHALL BE APPLIED PER SECTION 60.1.8 OF THE TRPA CODE OF ORDINANCES.
10. FERTILIZATION PLAN TO BE PROVIDED BY LANDSCAPE CONTRACTOR AT TIME OF INSTALLATION. ALL FERTILIZATION AND IRRIGATION METHODS TO COMPLY WITH SECTION 60.1.8 OF THE TRPA CODE OF ORDINANCES.
11. CONTRACTOR TO PROVIDE IRRIGATION LAYOUT PLAN PRIOR TO INSTALLATION FOR APPROVAL BY OWNER.

Table 5-3: Site Type Recommended Seed Mixes

SITE TYPE RECOMMENDED SEED MIXES[1]

Scientific Name	Common Name	Application Rate (PLS lbs./acre)[2,3,4] Wetland[5,6]	SEZ/ Riparian-Wet Meadow	Upland—Generic	Upland—Full Shade[7]	Upland—Full sun/ Dry Site	Upland—High Disturbance
Grasses, Rushes, and Sedges							
Bromus carinatus	California brome	–	3.00	–	–	4.00	–
Carex praegracilis	slender sedge	–	0.25	–	–	–	–
Deschampsia cespitosa	tufted haircgrass	–	0.50	–	–	–	–
Elymus elymoides	squirreltail	–	–	2.00	–	4.00	–
Elymus glaucus	blue wildrye	–	3.00	–	–	–	–
Elymus trachycaulus	slender wheatgrass	–	4.00	4.00	–	4.00	–
Festuca brevilipa	hard fescue	–	–	1.00	–	–	2.00
Festuca ovina, 'Covar'	sheep fescue, 'Covar'	–	–	1.00	–	–	2.00
Festuca rubra ssp. *arenaria*	Boreal creeping red fescue	–	0.50	–	–	–	–
Hordeum brachyantherum	meadow barley	–	5.00	–	–	–	–
Juncus arcticus ssp. *littoralis*	mountain rush	–	0.05	–	–	–	–
Leymus triticoides	creeping wildrye	–	2.00	–	–	–	–
Poa ampla, 'Sherman'	big bluegrass, 'Sherman'	–	–	1.00	–	–	1.00
Poa secunda	Sandberg bluegrass	–	–	–	–	0.50	–
Forbs							
Achillea millefolium	yarrow	–	–	0.10	–	0.10	0.10
Eriogonum umbellatum	sulphur buckwheat	–	–	1.00	–	1.00	2.00
Linum lewisii	Lewis flax	–	–	1.00	–	1.00	1.00
Lupinus argenteus	silver lupine	–	–	1.00	–	2.00	2.00
Lupinus polyphyllus	Tahoe lupine	–	2.00	–	–	–	–
Mimulus guttatus	common monkeyflower	–	0.10	–	–	–	–
Potentilla gracilis	cinquefoil	–	0.50	–	–	–	–
Shrubs and Trees							
Artemisia tridentata ssp. vaseyana	mountain sagebrush	–	–	–	–	0.50	–
Chrysothamnus nauseosus	rabbitbrush	–	–	–	–	1.00	–
Purshia tridentata	antelope bitterbrush	–	–	1.00	–	1.00	–
Ribes cereum	wax currant	–	–	0.50	–	0.50	–
Total		–	20.90	13.60	–	19.60	10.10

Notes:

1 – Composition of example mixes is based in part on commercial availability of plant cultivars, and because availability of cultivars frequently changes, cultivar substitutions may be necessary or desirable.
2 – PLS = Pure Live Seed = (percentage purity)(percentage germination)/100
3 – Although Noxious Weeds are prohibited, seed material may contain other weeds (e.g., up to 1.5% weed seed in Nevada, which corresponds to a large number of weed seed). Seed free of specified weeds (e.g., cheatgrass [Bromus tectorum]) and/or with a lesser amount of weeds is recommended.
4 – Amounts assume broadcast (hand) application of seed, and have been designed for 80–100 PLS ft2 because greater seed densities may result in densities of competing seedlings sufficient to reduce growth and inhibit establishment.
5 – Establishment of plant from seed is not recommended as the primary means of revegetating this type of site.
6 – SEZ/Riparian-Wet Meadow seed mix may be applied to supplement plantings at wetlands that are not inundated for most of the growing season.
7 – From 6,000 feet in elevation and higher

Ogilvy Consulting
LAND USE & DEVELOPMENT STRATEGIES
850 North Lake Boulevard, Suite 17
Tahoe City, California 96145
530.583.5800
info @ogilvylanduse.com

Tahoe Cedars
6980 West Lake Boulevard
Tahoma, California
Placer County APNs: 098-210-030 & 031

Date: 6/23/16
Revisions:

Landscape Plan

JOB:

DRAWN BY: EJL

SCALE: AS NOTED

SHEET L1.0

/Volumes/Documents/Projects/Luddy/Tahoe.Cedars/Drawings/TCE/2016.06.20/16.005 Civil5 - Standard/16.005 Civil5.dwg, Thu Jun 23 18:15:06 2016, Xerox_WC_7225(temp).PCM