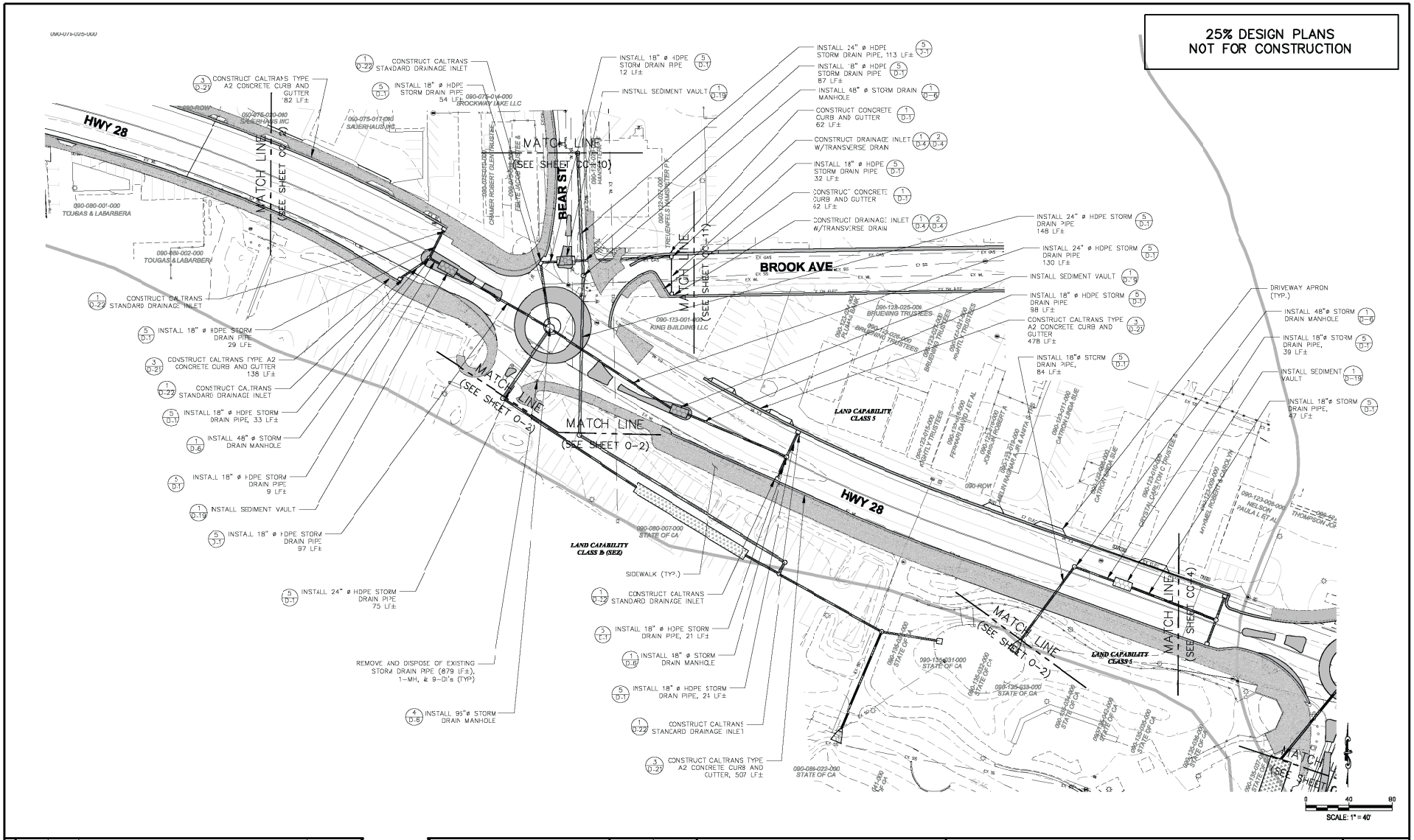

REVISION			
NUMBER	DATE	DESCRIPTION	BY

PREPARED UNDER THE SUPERVISION OF :

REGISTERED CIVIL ENGINEER

DATE:

DESIGNED: CMD	DRAWN: CMD
CHECKED: SP	DATE: 12/07
ROAD NUMBER: N/A	

PLACER COUNTY
DEPARTMENT OF PUBLIC WORKS

ENTRIX
1048 Sk: Rus Boulevard
South Lake Tahoe, CA 96150
(530) 542-0001 Main

KINGS BEACH WATERSHED IMPROVEMENT PROJECT COMMERCIAL CORE (HWY 28) PLACER COUNTY, CALIFORNIA

SHEET CC-3

W.O. No. 3128703

25% DESIGN PLANS
NOT FOR CONSTRUCTION

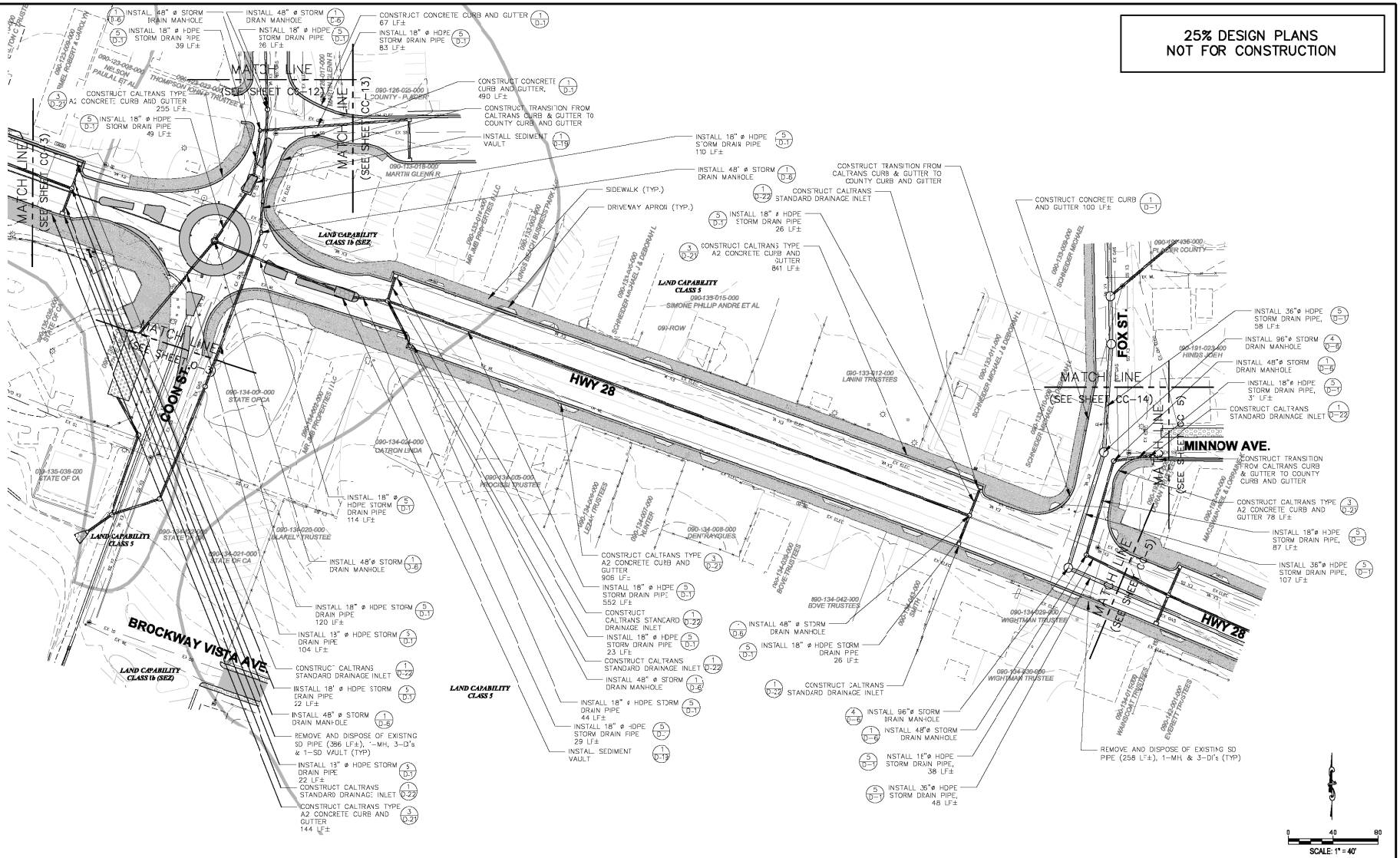

REVISION			
NUMBER	DATE	DESCRIPTION	BY

PREPARED UNDER THE SUPERVISION OF :

REGISTERED CIVIL ENGINEER

DATE:

DESIGNED: CMD	DRAWN: CMD
CHECKED: SP	DATE: 12/07
ROAD NUMBER: N/A	

PLACER COUNTY
DEPARTMENT OF PUBLIC WORKS

ENTRIX
1048 Sk: Rus Boulevard
South Lake Tahoe, CA 96150
(530) 542-0001 Main

KINGS BEACH WATERSHED IMPROVEMENT PROJECT COMMERCIAL CORE (HWY-28) PLACER COUNTY, CALIFORNIA

SHEET CC-4

W.O. No. 3128703

25% DESIGN PLANS
NOT FOR CONSTRUCTION

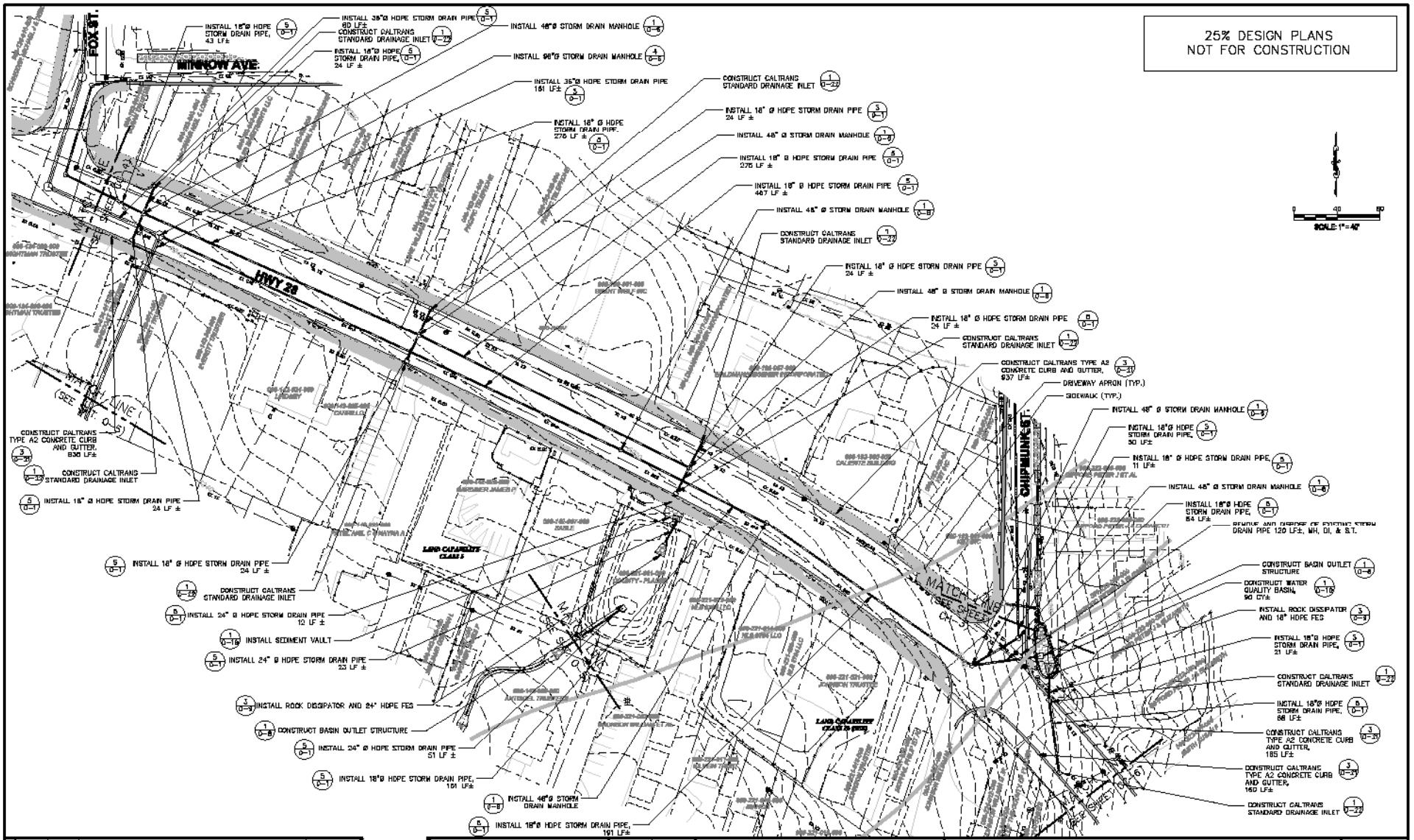

REVISION			
NUMBER	DATE	DESCRIPTION	BY

PREPARED UNDER THE SUPERVISION OF :

REGISTERED CIVIL ENGINEER

DATE:

DESIGNED: CMD	DRAWN: CMD
CHECKED: SP	DATE: 12/07
ROAD NUMBER: N/A	

PLACER COUNTY
DEPARTMENT OF PUBLIC WORKS

FWTRIX

KINGS BEACH WATERSHED IMPROVEMENT PROJECT COMMERCIAL CORE (HWY 28) PLACER COUNTY, CALIFORNIA

SHEET CC-5

K.O. No. 3125703

[redacted]

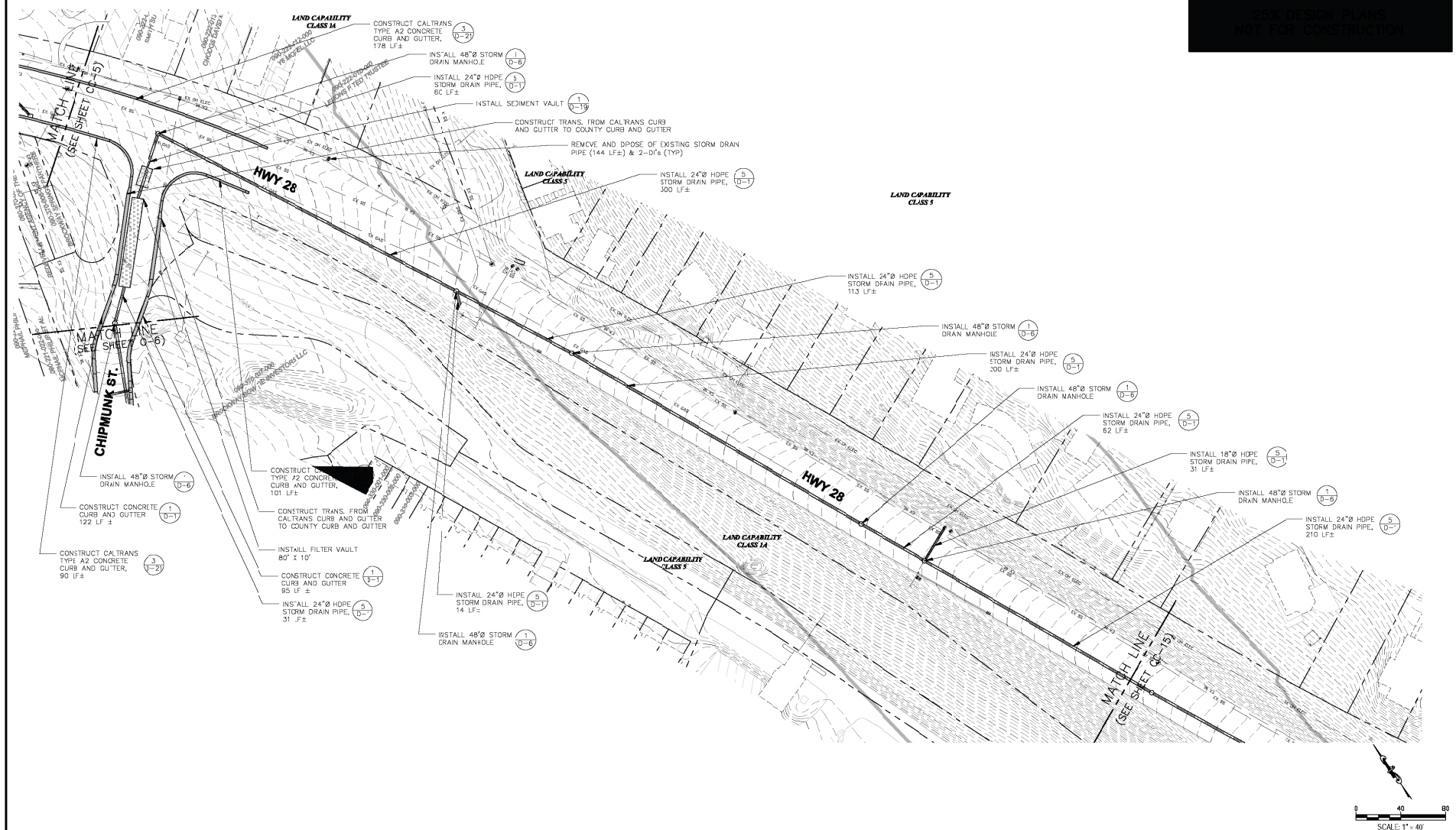

REVISION			
NUMBER	DATE	DESCRIPTION	BY

PREPARED UNDER THE SUPERVISION OF :

REGISTERED CIVIL ENGINEER

DATE:

DESIGNED: CMD	DRAWN: CMD
CHECKED: SP	DATE: 12/07
ROAD NUMBER: N/A	

PLACER COUNTY
DEPARTMENT OF PUBLIC WORKS

ENTRIX
1048 Ski Run Boulevard
South Lake Tahoe, CA 96150
(530) 542-0201 Main

KINGS BEACH
WATERSHED IMPROVEMENT PROJECT
COMMERCIAL CORE (SR 28)
PLACER COUNTY, CALIFORNIA

SHEET
CC-6

W.O. No. 3128703

25% DESIGN PLANS
NOT FOR CONSTRUCTION

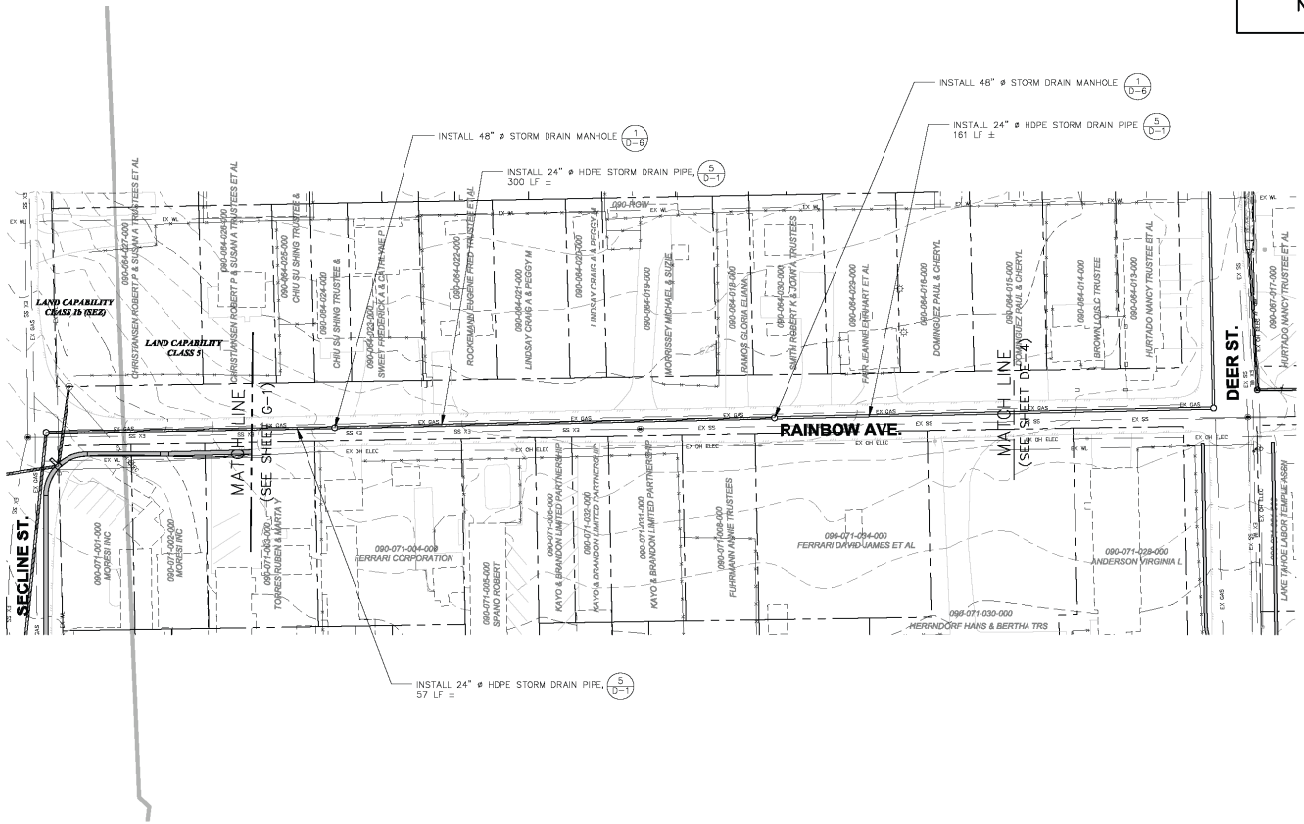

REVISION			
NUMBER	DATE	DESCRIPTION	BY

PREPARED UNDER THE SUPERVISION OF :

REGISTERED CIVIL ENGINEER

DATE:

DESIGNED: CMD	DRAWN: CMD
CHECKED: SP	DATE: 12/07
ROAD NUMBER: N/A	

PLACER COUNTY
DEPARTMENT OF PUBLIC WORKS

ENTRIX
1048 Sk Rus Boulevard
South Lake Tahoe, CA 96150
(530) 542-0201 Main

KINGS BEACH
WATERSHED IMPROVEMENT PROJECT
COMMERCIAL CORE (RAINBOW AVE)
PLACER COUNTY, CALIFORNIA

SHEET
CC-7

W.O. No. 3128703

25% DESIGN PLANS
NOT FOR CONSTRUCTION

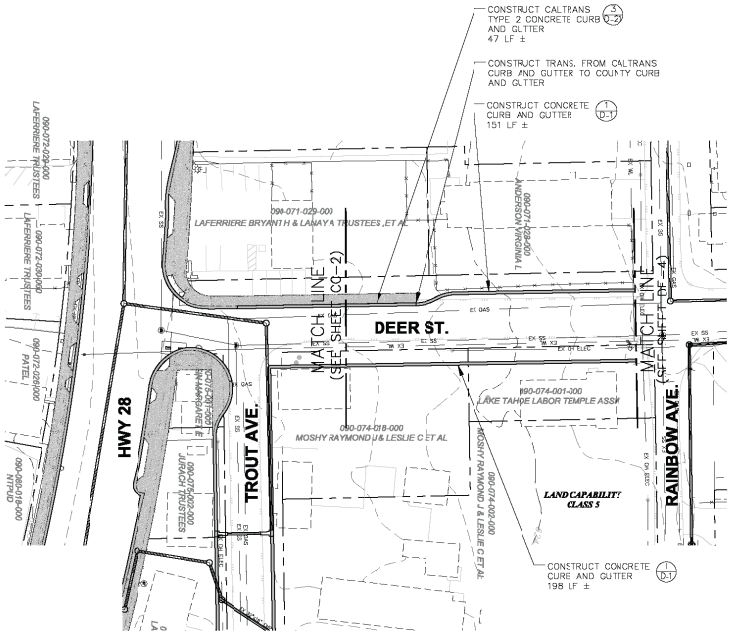

0 40 80
SCALE: 1" = 40'

REVISION			
NUMBER	DATE	DESCRIPTION	BY

PREPARED UNDER THE SUPERVISION OF :

REGISTERED CIVIL ENGINEER

DATE:

DESIGNED: CMD	DRAWN: CMD
CHECKED: SP	DATE: 12/07
ROAD NUMBER: N/A	

PLACER COUNTY
DEPARTMENT OF PUBLIC WORKS

ENTRIX
1048 Ski Run Boulevard
South Lake Tahoe, CA 96150
(530) 542-0201 Main

KINGS BEACH
WATERSHED IMPROVEMENT PROJECT
COMMERCIAL CORE (DEER ST.)
PLACER COUNTY, CALIFORNIA

SHEET
CC-8

W.O. No.
3128703

25% DESIGN PLANS
NOT FOR CONSTRUCTION

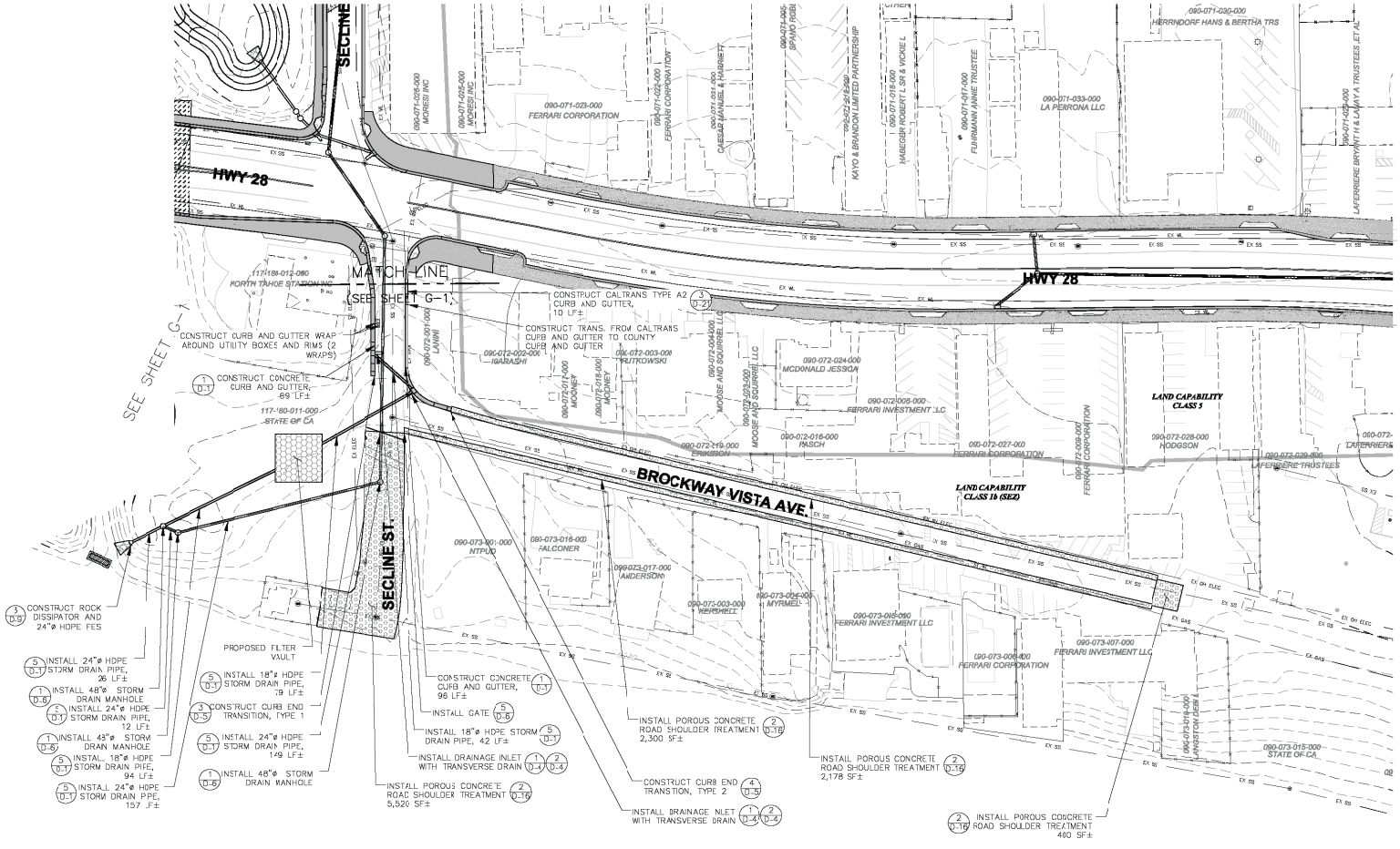

REVISION			
NUMBER	DATE	DESCRIPTION	BY

PREPARED UNDER THE SUPERVISION OF :

REGISTERED CIVIL ENGINEER

DATE:

DESIGNED: CMD	DRAWN: CMD
CHECKED: SP	DATE: 12/07
ROAD NUMBER: N/A	

PLACER COUNTY
DEPARTMENT OF PUBLIC WORKS

ENTRIX
1048 Sk: Rus Boulevard
South Lake Tahoe, CA 96150
(530) 542-0001 Main

KINGS BEACH WATERSHED IMPROVEMENT PROJECT COMMERCIAL CORE (BROCKWAY) PLACER COUNTY, CALIFORNIA

SHEET CC-9

W.O. No. 3128703

25% DESIGN PLANS
NOT FOR CONSTRUCTION

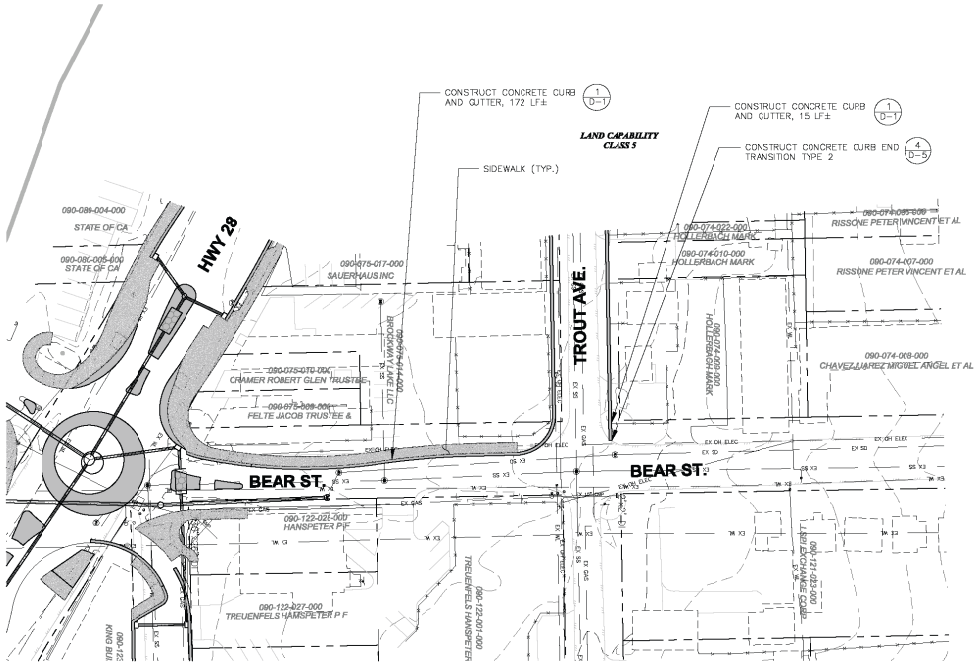

0 40 80
SCALE: 1" = 40'

REVISION			
NUMBER	DATE	DESCRIPTION	BY

PREPARED UNDER THE SUPERVISION OF :

REGISTERED CIVIL ENGINEER

DATE:

DESIGNED: CMD	DRAWN: CMD
CHECKED: SP	DATE: 12/07
ROAD NUMBER: N/A	

PLACER COUNTY
DEPARTMENT OF PUBLIC WORKS

ENTRIX
1048 Sk Rus Boulevard
South Lake Tahoe, CA 96150
(530) 542-0201 Main

KINGS BEACH
WATERSHED IMPROVEMENT PROJECT
COMMERCIAL CORE (BEAR ST.)
PLACER COUNTY, CALIFORNIA

SHEET
CC-10

W.O. No.
3128703

25% DESIGN PLANS
NOT FOR CONSTRUCTION

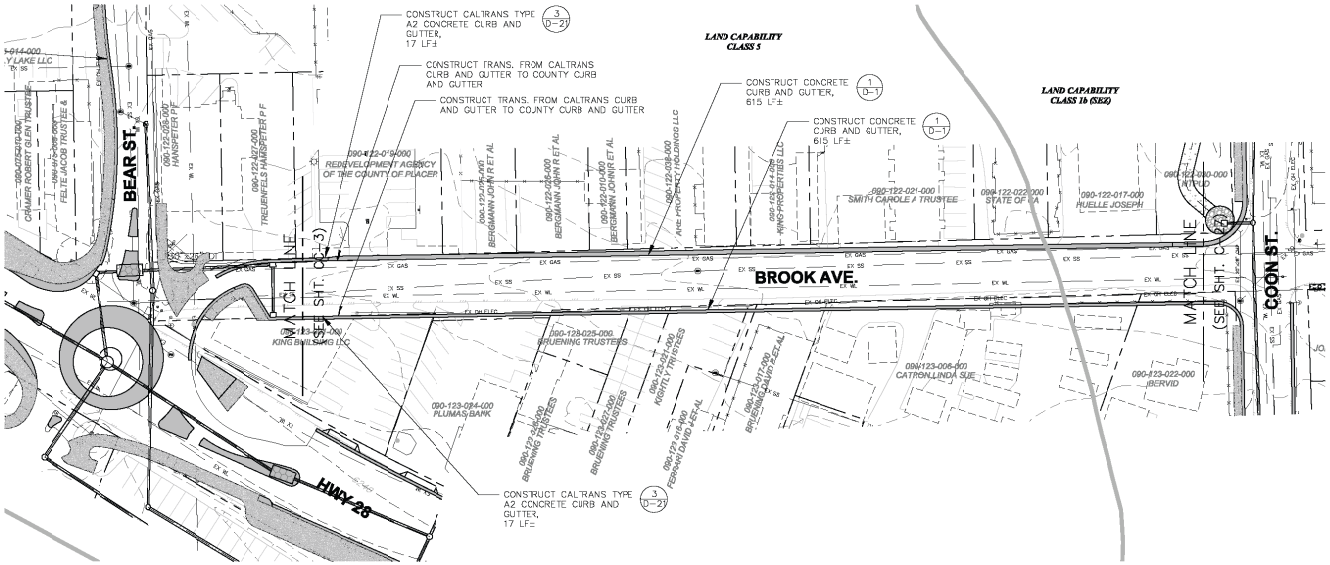

0 40 80
SCALE: 1" = 40'

REVISION			
NUMBER	DATE	DESCRIPTION	BY

PREPARED UNDER THE SUPERVISION OF :

REGISTERED CIVIL ENGINEER

DATE:

DESIGNED: CMD	DRAWN: CMD
CHECKED: SP	DATE: 12/07
ROAD NUMBER: N/A	

PLACER COUNTY
DEPARTMENT OF PUBLIC WORKS

ENTRIX
1048 Sk Rus Boulevard
South Lake Tahoe, CA 96150
(530) 542-0201 Main

KINGS BEACH
WATERSHED IMPROVEMENT PROJECT
COMMERCIAL CORE (BROOK AVE.)
PLACER COUNTY, CALIFORNIA

SHEET
CC-11

W.O. No.
3128703

25% DESIGN PLANS
NOT FOR CONSTRUCTION

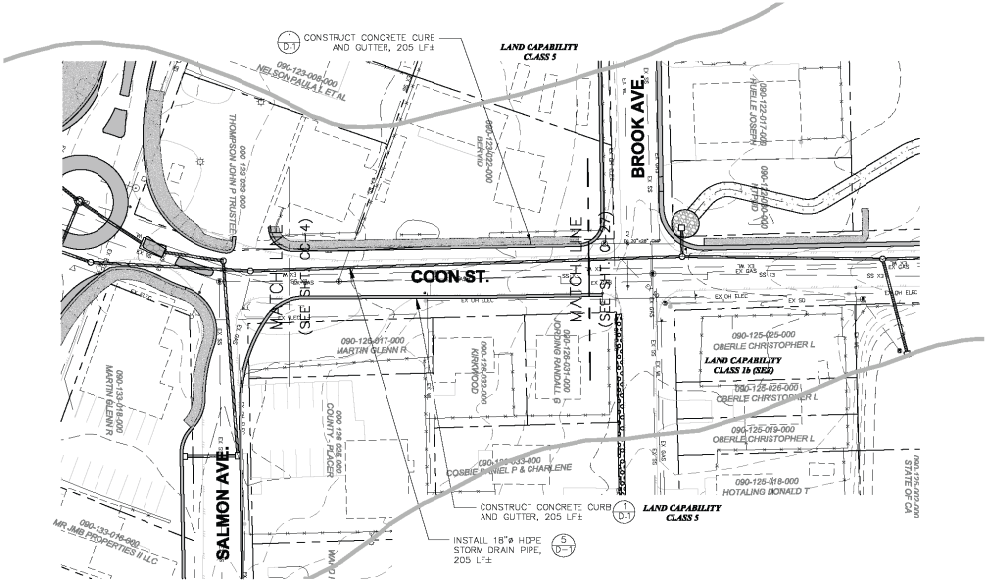

0 40 80
SCALE: 1" = 40'

REVISION			
NUMBER	DATE	DESCRIPTION	BY

PREPARED UNDER THE SUPERVISION OF :

REGISTERED CIVIL ENGINEER

DATE:

DESIGNED: CMD	DRAWN: CMD
CHECKED: SP	DATE: 12/07
ROAD NUMBER: N/A	

PLACER COUNTY
DEPARTMENT OF PUBLIC WORKS

ENTRIX
1048 Sk Rus Boulevard
South Lake Tahoe, CA 96150
(530) 542-0201 Main

KINGS BEACH
WATERSHED IMPROVEMENT PROJECT
COMMERCIAL CORE (COON ST)
PLACER COUNTY, CALIFORNIA

SHEET
CC-12

W.O. No.
3128703

25% DESIGN PLANS
NOT FOR CONSTRUCTION

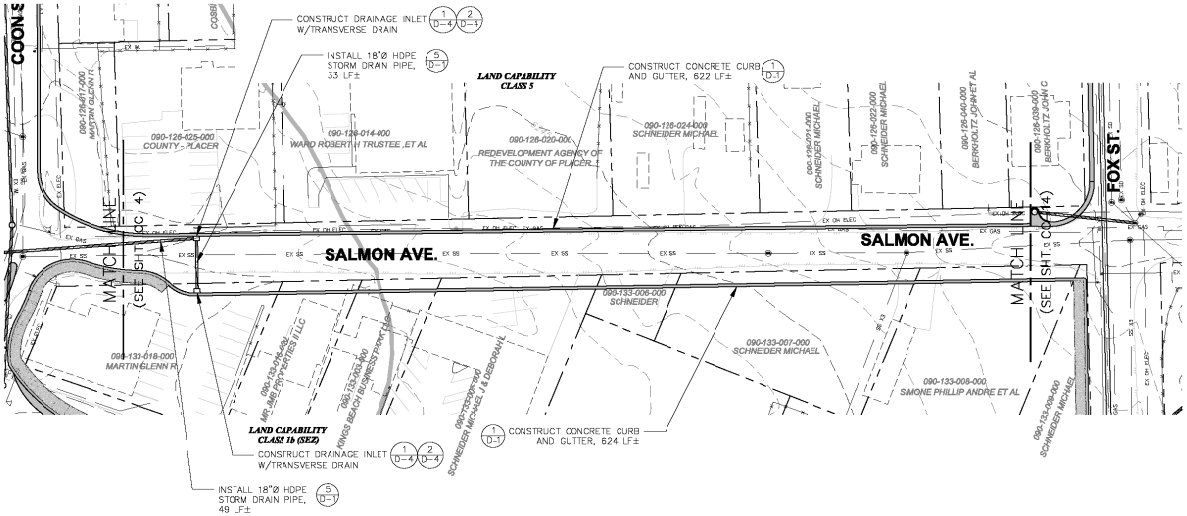

SCALE: 1" = 40'

REVISION			
NUMBER	DATE	DESCRIPTION	BY

PREPARED UNDER THE SUPERVISION OF :

REGISTERED CIVIL ENGINEER

DATE:

DESIGNED: CMD	DRAWN: CMD
CHECKED: SP	DATE: 12/07
ROAD NUMBER: N/A	

PLACER COUNTY
DEPARTMENT OF PUBLIC WORKS

ENTRIX
1048 Sk Rus Boulevard
South Lake Tahoe, CA 96150
(530) 542-0201 Main

KINGS BEACH
WATERSHED IMPROVEMENT PROJECT
COMMERCIAL CORE (SALMON AVE.)
PLACER COUNTY, CALIFORNIA

SHEET
CC-13

W.O. No. 3128703

25% DESIGN PLANS
NOT FOR CONSTRUCTION

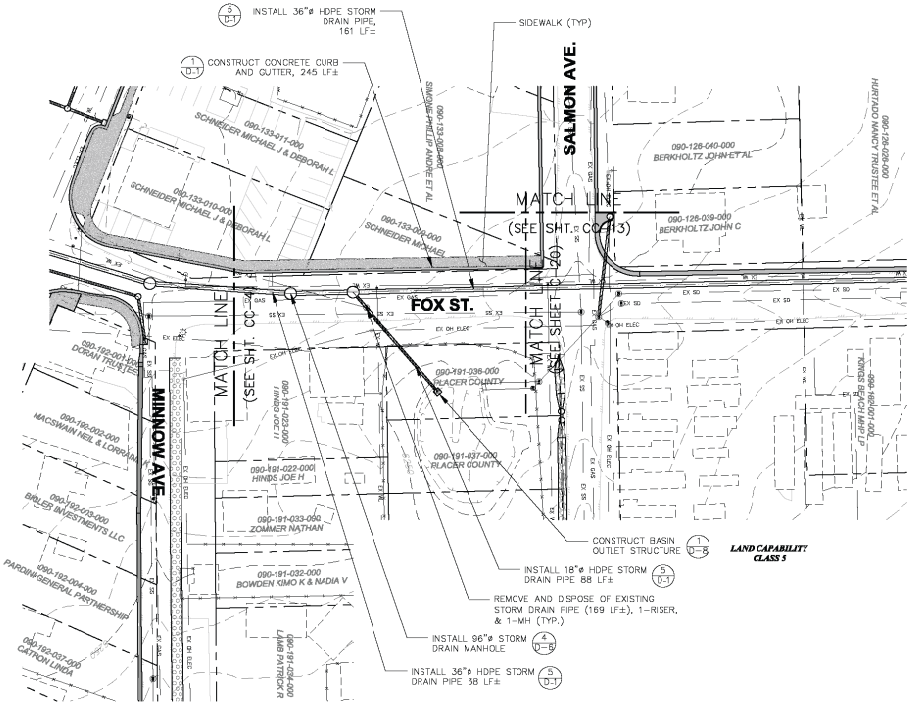

0 40 80
SCALE: 1" = 40'

REVISION			
NUMBER	DATE	DESCRIPTION	BY

PREPARED UNDER THE SUPERVISION OF :

REGISTERED CIVIL ENGINEER

DATE:

DESIGNED: CMD	DRAWN: CMD
CHECKED: SP	DATE: 12/07
ROAD NUMBER: N/A	

PLACER COUNTY
DEPARTMENT OF PUBLIC WORKS

ENTRIX
1048 Ski Run Boulevard
South Lake Tahoe, CA 96150
(530) 542-0201 Main

KINGS BEACH
WATERSHED IMPROVEMENT PROJECT
COMMERCIAL CORE (FOX ST.)
PLACER COUNTY, CALIFORNIA

SHEET
CC-14

W.O. No.
3128703

25% DESIGN PLANS
NOT FOR CONSTRUCTION

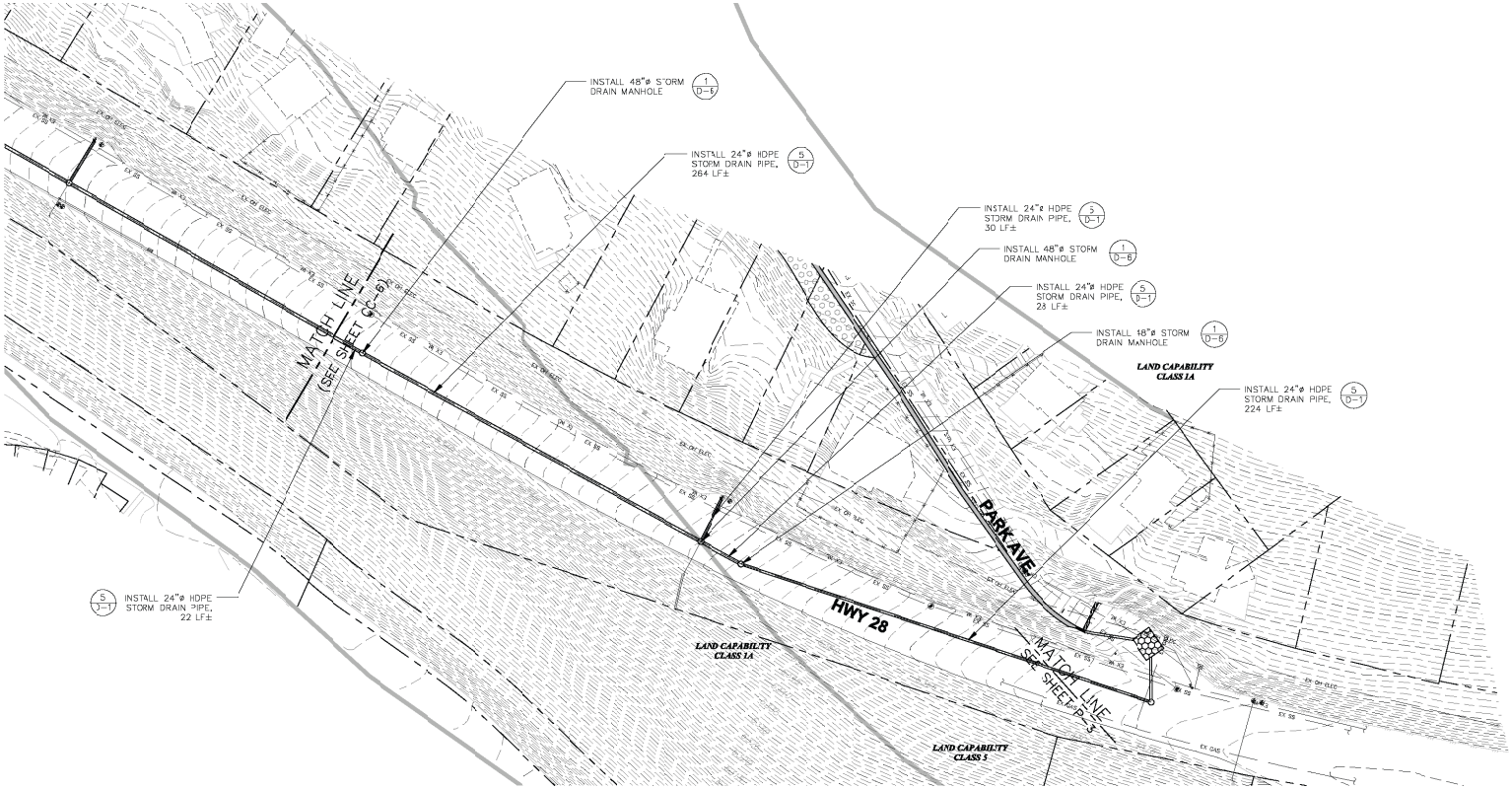

0 40 80
SCALE: 1" = 40'

REVISION			
NUMBER	DATE	DESCRIPTION	BY

PREPARED UNDER THE SUPERVISION OF :

REGISTERED CIVIL ENGINEER

DATE:

DESIGNED: CMD	DRAWN: CMD
CHECKED: SP	DATE: 12/07
ROAD NUMBER: N/A	

PLACER COUNTY
DEPARTMENT OF PUBLIC WORKS

ENTRIX
1048 Ski Run Boulevard
South Lake Tahoe, CA 96150
(530) 542-0201 Main

KINGS BEACH
WATERSHED IMPROVEMENT PROJECT
COMMERCIAL CORE (SR 28)
PLACER COUNTY, CALIFORNIA

SHEET
CC-15

W.O. No. 3128703

25% DESIGN PLANS
NOT FOR CONSTRUCTION

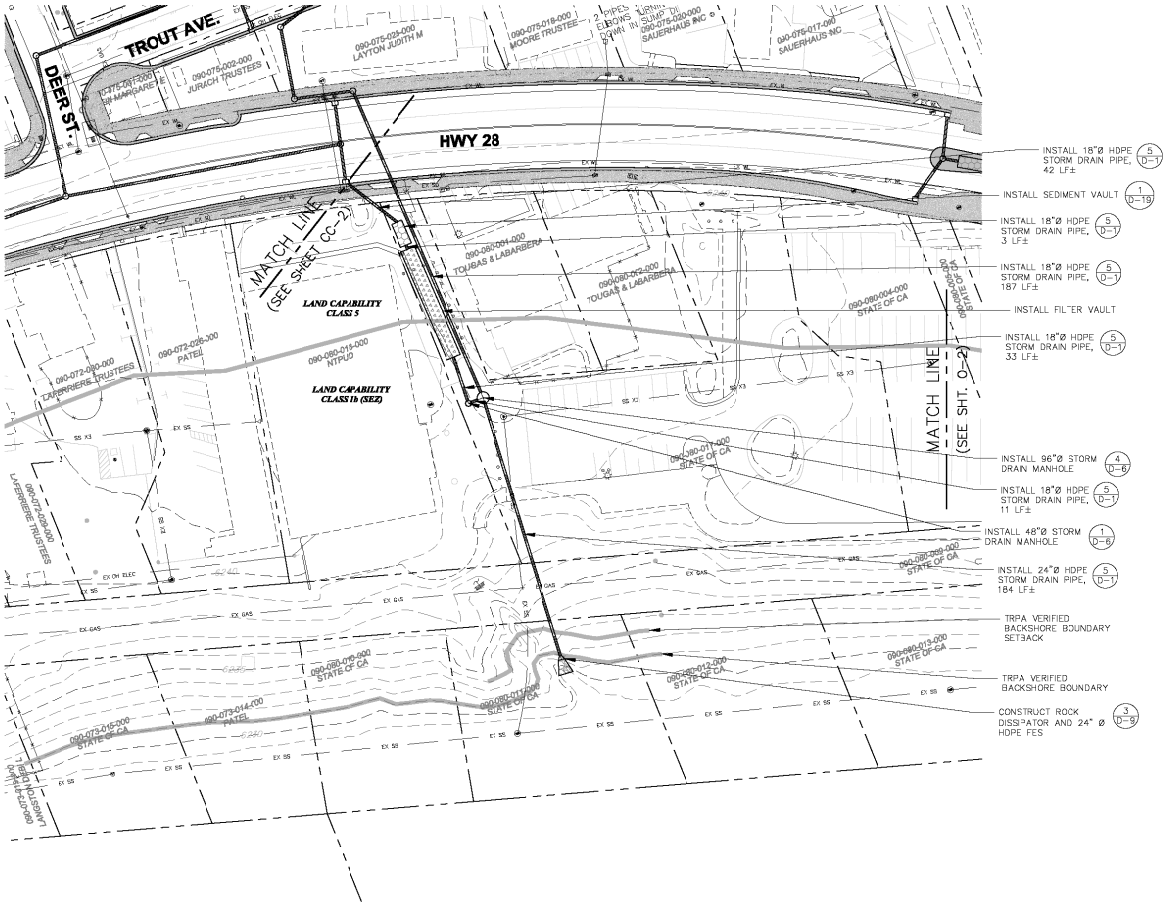

SCALE: 1" = 40'

REVISION			
NUMBER	DATE	DESCRIPTION	BY

PREPARED UNDER THE SUPERVISION OF :

REGISTERED CIVIL ENGINEER

DATE:

DESIGNED: CMD	DRAWN: CMD
CHECKED: SP	DATE: 12/07
ROAD NUMBER: N/A	

PLACER COUNTY
DEPARTMENT OF PUBLIC WORKS

ENTRIX
1048 Ski Run Boulevard
South Lake Tahoe, CA 96150
(530) 542-0201 Main

KINGS BEACH
WATERSHED IMPROVEMENT PROJECT
OUTFALL WATERSHED
PLACER COUNTY, CALIFORNIA

SHEET O-1

W.O. No. 3128703

25% DESIGN PLANS
NOT FOR CONSTRUCTION

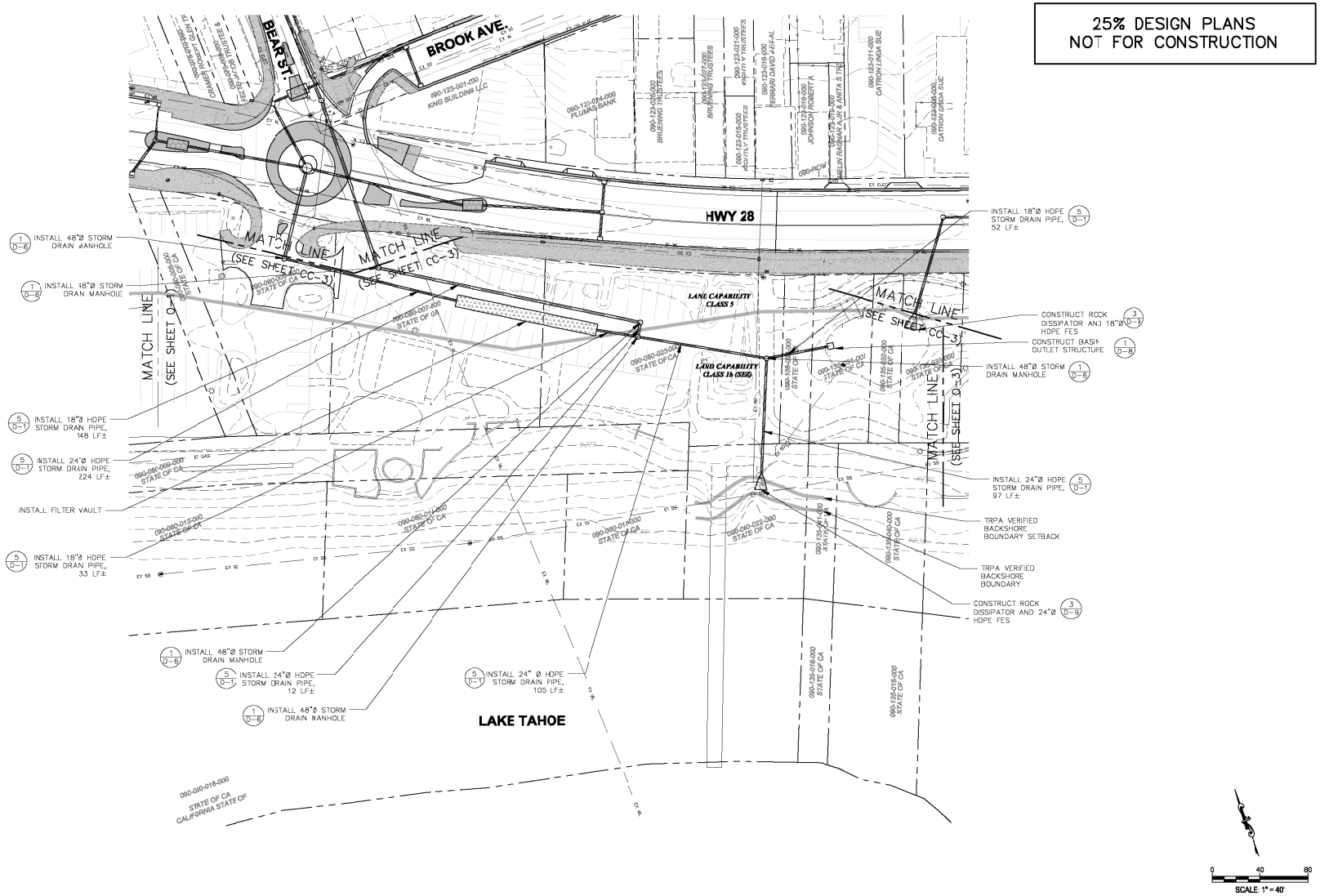

REVISION			
NUMBER	DATE	DESCRIPTION	BY

PREPARED UNDER THE SUPERVISION OF :

REGISTERED CIVIL ENGINEER

DATE:

DESIGNED: CMD	DRAWN: CMD
CHECKED: SP	DATE: 12/07
ROAD NUMBER: N/A	

PLACER COUNTY
DEPARTMENT OF PUBLIC WORKS

ENTRIX
1048 Sk Run Boulevard
South Lake Tahoe, CA 96150
(530) 542-0201 Main

KINGS BEACH WATERSHED IMPROVEMENT PROJECT OUTFALL WATERSHED PLACER COUNTY, CALIFORNIA

SHEET O-2

W.O. No. 3128703

25% DESIGN PLANS
NOT FOR CONSTRUCTION

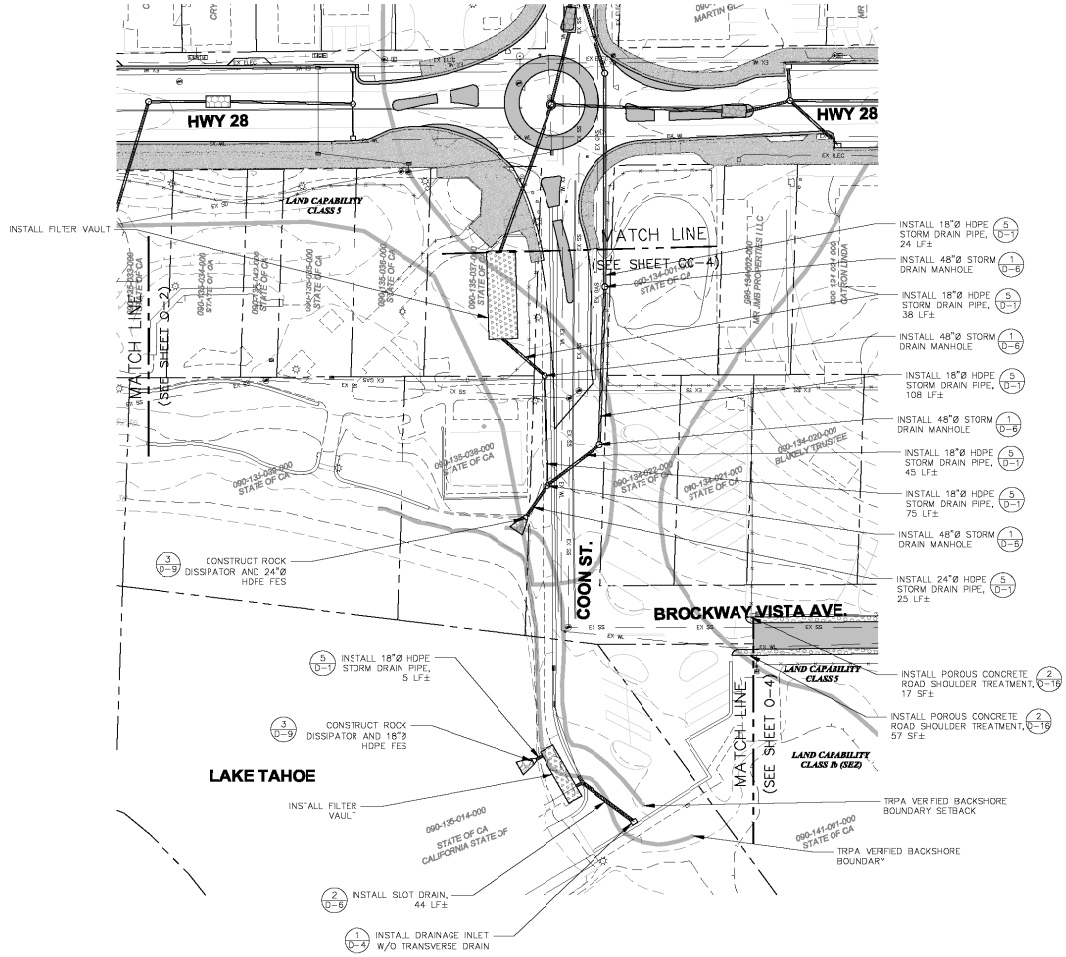

REVISION			
NUMBER	DATE	DESCRIPTION	BY

PREPARED UNDER THE SUPERVISION OF :

REGISTERED CIVIL ENGINEER

DATE:

DESIGNED: CMD	DRAWN: CMD
CHECKED: SP	DATE: 12/07
ROAD NUMBER: N/A	

PLACER COUNTY
DEPARTMENT OF PUBLIC WORKS

ENTRIX
1048 Sk: Rus Boulevard
South Lake Tahoe, CA 96150
(530) 542-0201 Main

KINGS BEACH
WATERSHED IMPROVEMENT PROJECT
BEAR WATERSHED
PLACER COUNTY, CALIFORNIA

SHEET
O-3

W.O. No. 3128703

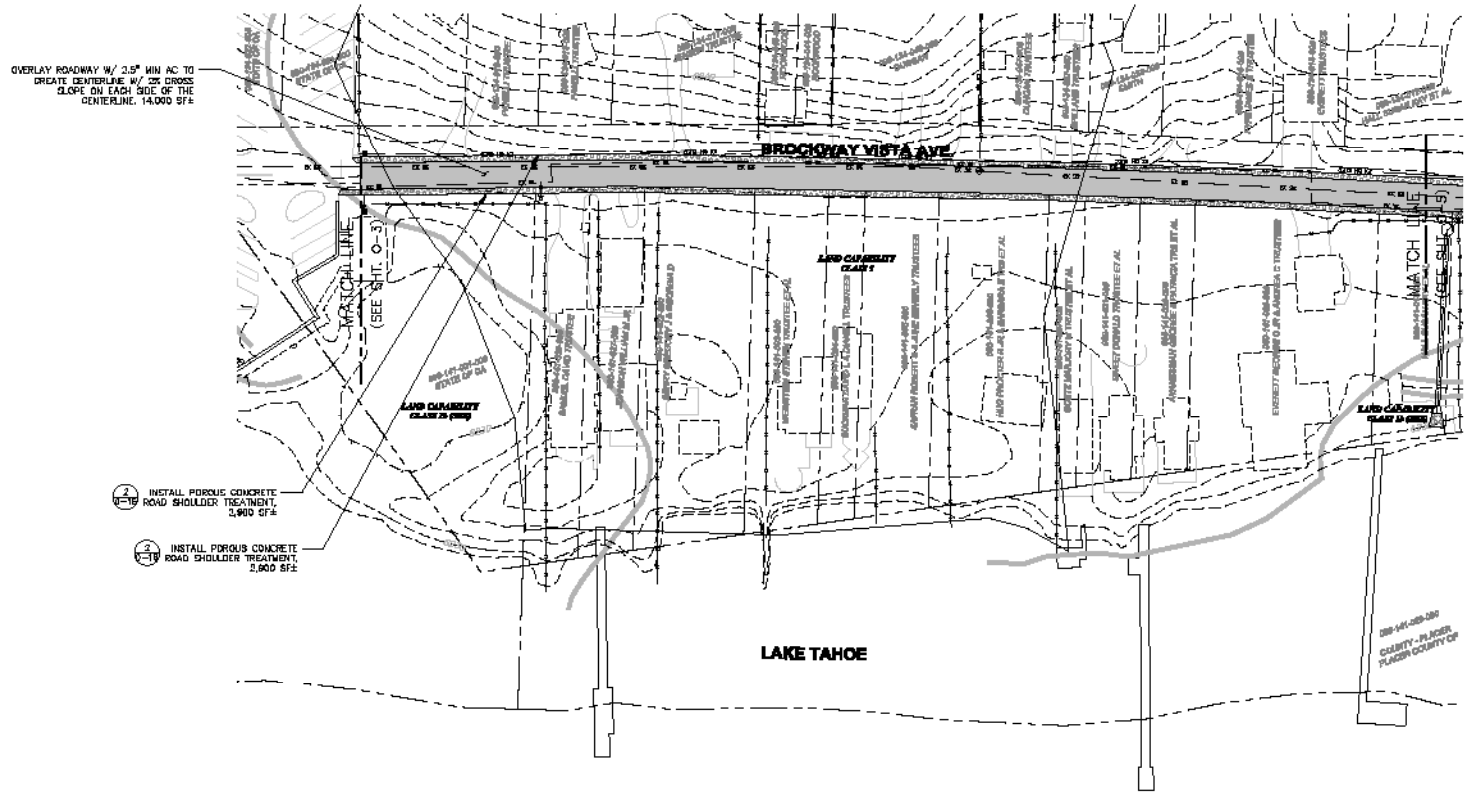

25% DESIGN PLANS
NOT FOR CONSTRUCTION

SCALE: 1" = 40'

REVISION			
NUMBER	DATE	DESCRIPTION	BY

PREPARED UNDER THE SUPERVISION OF :

REGISTERED CIVIL ENGINEER

DATE:

DESIGNED: DMD	DRAWN: DMD
CHECKED: SP	DATE: 12/07
ROAD NUMBER: N/A	

PLACER COUNTY
DEPARTMENT OF PUBLIC WORKS

FINTRIX

KINGS BEACH
WATERSHED IMPROVEMENT PROJECT
OUTFALL WATERSHED
PLACER COUNTY, CALIFORNIA

SHEET 0-4

W.O. No. 3126703

25% DESIGN PLANS
NOT FOR CONSTRUCTION

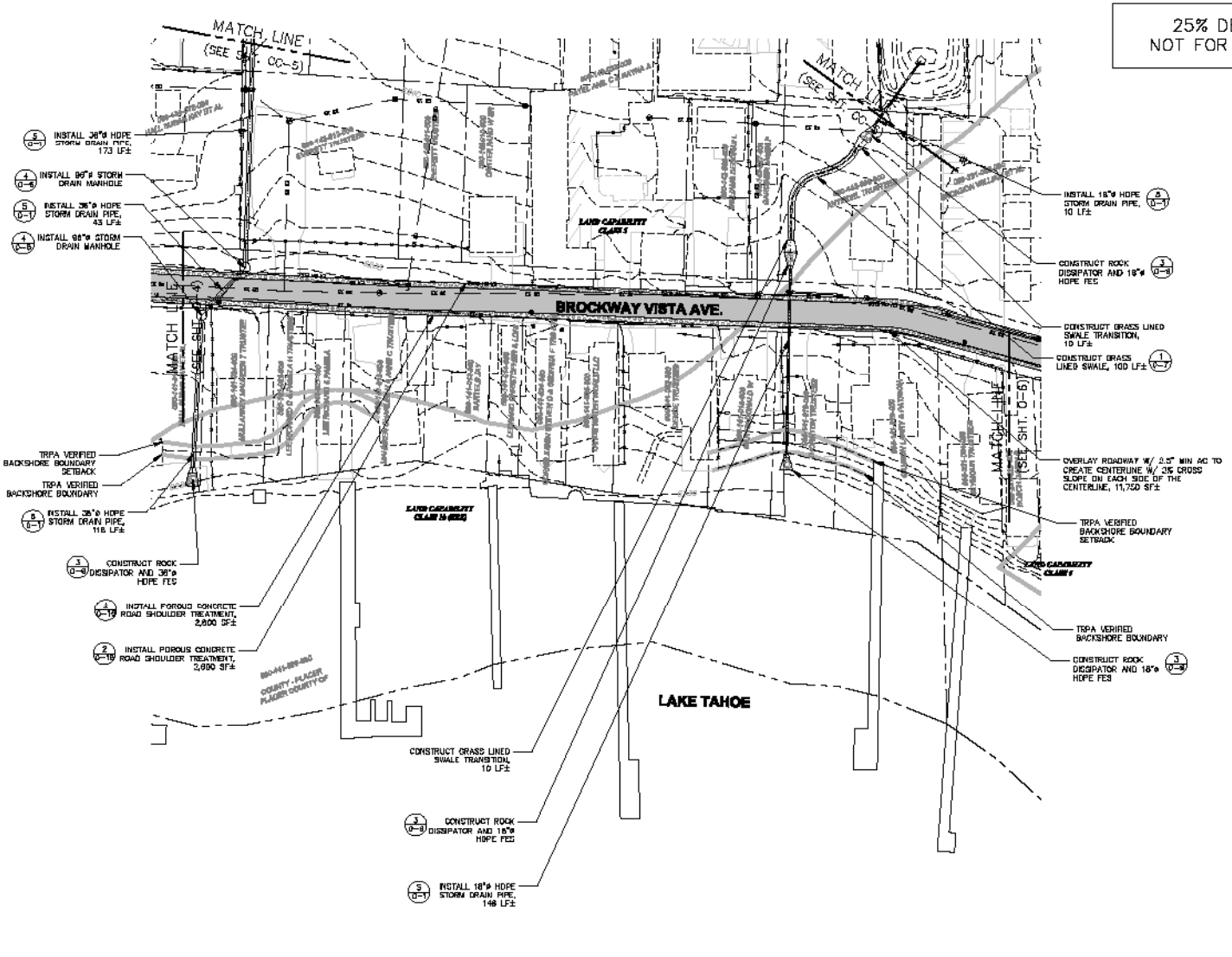

REVISION			
NUMBER	DATE	DESCRIPTION	BY

PREPARED UNDER THE SUPERVISION OF :

REGISTERED CIVIL ENGINEER

DATE:

DESIGNED:	DRAWN:
DMD	DMD
CHECKED:	DATE:
SP	10/07
ROAD NUMBER: N/A	

PLACER COUNTY
DEPARTMENT OF PUBLIC WORKS

FNTRIX

KINGS BEACH
WATERSHED IMPROVEMENT PROJECT
OUTFALL WATERSHED
PLACER COUNTY, CALIFORNIA

SHEET
D-5

W.O. No. 3126703

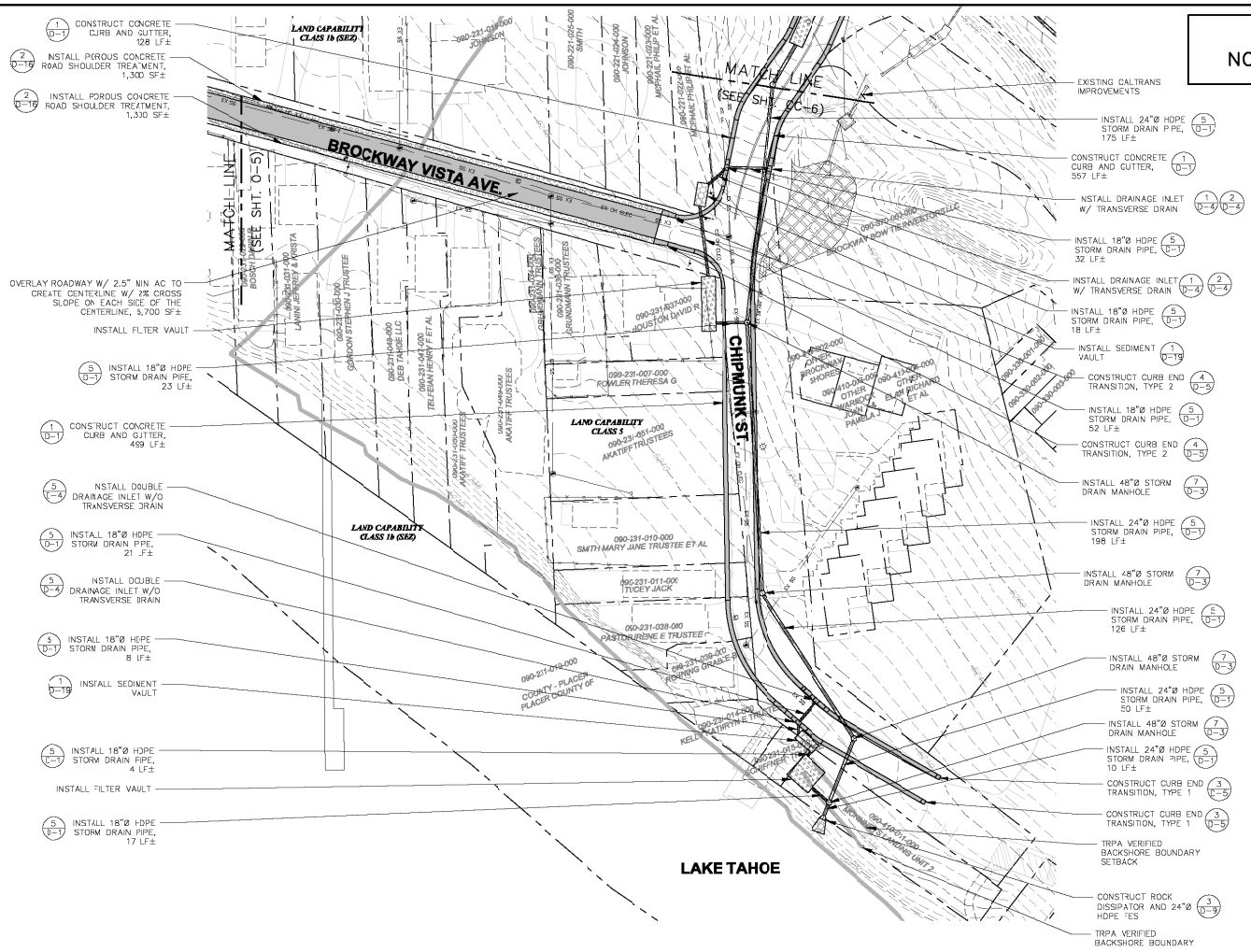

25% DESIGN PLANS
NOT FOR CONSTRUCTION

SCALE: 1" = 40'

REVISION			
NUMBER	DATE	DESCRIPTION	BY

PREPARED UNDER THE SUPERVISION OF :

REGISTERED CIVIL ENGINEER

DATE:

DESIGNED:	DRAWN:
CMD	CMD
CHECKED:	DATE:
SP	12/07
ROAD NUMBER:	
N/A	

PLACER COUNTY
DEPARTMENT OF PUBLIC WORKS

ENTRIX
1048 Sk Rue Boulevard
South Lake Tahoe, CA 96159
(530) 542-0201 Main

KINGS BEACH
WATERSHED IMPROVEMENT PROJECT
OUTFALL WATERSHED
PLACER COUNTY, CALIFORNIA

SHEET
O-6

W.O. No.
3128703

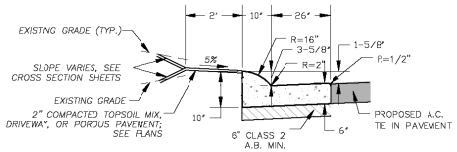

NOTES:

1. STRUCTURAL THICKNESSES ARE MINIMUM. INCREASED SECTIONS MAY BE REQUIRED BASED ON ACTUAL SOIL CONDITIONS, OR PROJECT APPROVALS.
2. UNSUITABLE MATERIALS TO BE REMOVED & REPLACED W/SUITABLE MATERIAL.

TYPE 1A: ROLLED CURB AND GUTTER

NTS

1 / D-1

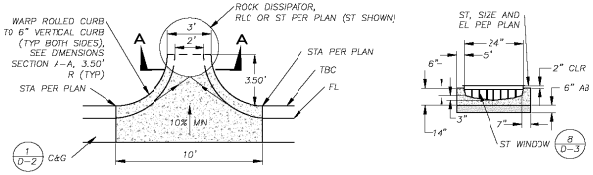

CURB OPENING CENTER

NTS

2 / D-1

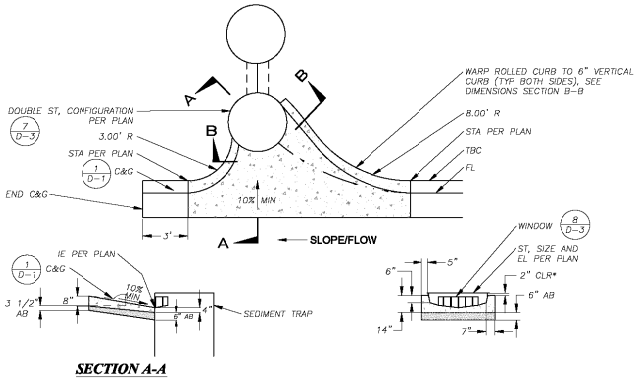

CURB OPENING SIDE

NTS

3 / D-1

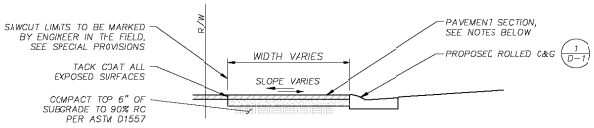

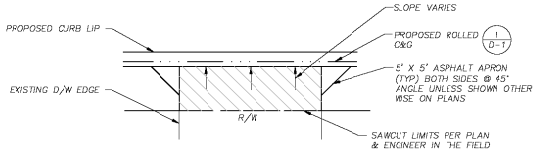

NOTES:

1. DRIVEWAY PAVEMENT REPLACEMENT TO BE 2 1/2" AC OVER 4" AB @ 95% RC.
2. MATCH WIDTH OF EXISTING DRIVEWAY UNLESS NOTED OTHERWISE ON PLANS.
3. THE ENGINEER SHALL MARK THE SAWCUT LIMITS AT EACH DRIVEWAY.
4. DRIVEWAY PAVING SHALL BE WARPED TO MAINTAIN A SMOOTH TRANSITION AND PREVENT PONDING.
5. FINISHED DRIVEWAY GRADES SHALL BE UNIFORM FROM SAWCUT TO C&G OR EXISTING PAVEMENT.

DRIVEWAY REPAIR AND REPAVE WITH CURB AND GUTTER

NTS

4 / D-1

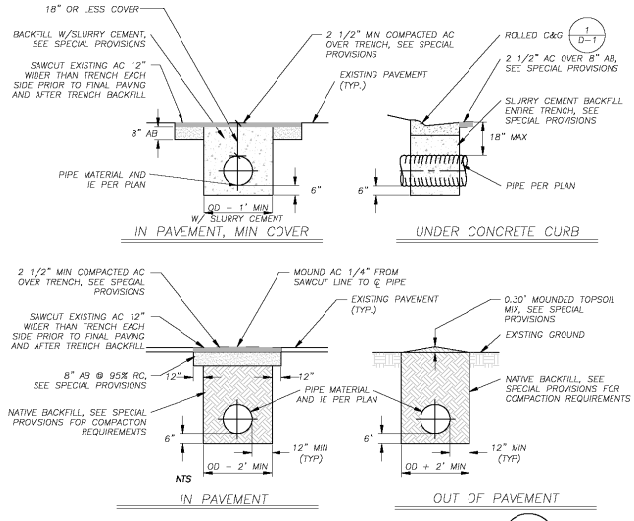

PIPE TRENCH

NTS

5 / D-1

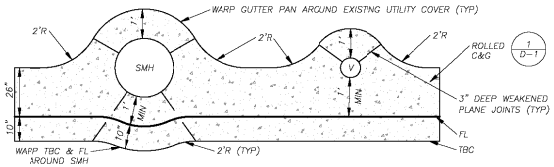

NOTE:
CONTRACTOR SHALL FOLLOW THIS DETAIL WHEN VALVE BOXES AND/OR MANHOLES ARE IN CONFLICT WITH GUTTER PAN.

CURB & GUTTER AT UTILITY VALVES

NTS

6 / D-1

CONCRETE NOTES: THIS PAGE

1. THE STRING LINE SHALL BE SET SUFFIGENTLY IN ADVANCE OF THE SCHEDULED POUR, BUT IN NO CASE LESS THAN 2 HOURS, TO ALLOW THE ENGINEER TO CHECK THE LINE AGAINST CUT LINE GRADES AND PROVIDE TIME FOR ADJUSTMENT, IF NECESSARY.
2. CURB AND GUTTER SHALL BE CONSTRUCTED MONOLITHICALLY.
3. LOCATE 1/2" PREMOLDED TRANSVERSE EXPANSION JOINTS OF ASPHALT IMPREGNATED CELOTEX IN CURB AND GUTTER AT 200' INTERVALS, AT CURB RETURNS, AT ANY TRANSITION FROM MACHINE EXTRUDED CURB TO FORMED CURB, AND AT ANY LOCATION WHERE CONCRETE PLACEMENT WILL STOP LONG ENOUGH FOR CONCRETE TO SET PRIOR TO CONTINUING WITH ADDITIONAL CONCRETE. PROVIDE 3" DEEP CRACK (WEAKENED PLANE) JOINT EVERY 10'.
4. ALL CONCRETE FOR THOSE ITEMS SHOWN ON THIS SHEET SHALL BE FINISHED BY BRUSHING WITH A SOFT BROOM AND SPRAYED UNIFORMLY WITH A CLEAR PIGMENTED CURING COMPOUND CONFORMING TO SECTION 90.7 OF THE STATE STD. SPECIFICATIONS.
5. ALL CURB AND GUTTER SHALL BE WATER TESTED AND SHALL DRAIN WITH NO PONDING. IF PONDING DOES OCCUR, THE CONTRACTOR SHALL BE RESPONSIBLE FOR REMOVAL AND REPLACEMENT OF A SUFFICIENT AMOUNT OF CURB AND GUTTER TO ELIMINATE THE PONDING. GRINDING OF THE FLOWLINE WILL NOT BE PERMITTED.
6. THE AREA TO BE REGRADED BEHIND THE CURB VARIES, SEE CROSS SECTION SHEETS. CONTRACTOR TO GRADE AND PREPARE AREA FOR REVEGETATION BY OTHERS. NATIVE MATERIAL IS ACCEPTABLE FOR FILL, EXCLUDING ROCKS LARGER THAN 1 1/2" IN DIMENSION. BACKFILL, REGRADING, AND TOPSOIL MIX PLACEMENT AND COMPACTION, WILL BE INCLUDED IN THE CURB AND GUTTER BID PRICE. MULCH AND TACKIFER APPLICATIONS BY CONTRACTOR AFTER REVEGETATION IS COMPLETE.
7. SEE SPECIAL PROVISIONS FOR SUBGRADE PREPARATION REQUIREMENTS.

REVISION			
NUMBER	DATE	DESCRIPTION	BY

PREPARED UNDER THE SUPERVISION OF :

REGISTERED CIVIL ENGINEER

DATE:

DESIGNED: MBG	DRAWN: MBG
CHECKED: SP	DATE: 12/07
ROAD NUMBER: N/A	

PLACER COUNTY
DEPARTMENT OF PUBLIC WORKS

ENTRIX
1046 Sk Run Boulevard
South Lake Tahoe, CA 96150
(530) 542-0201 Main

KINGS BEACH WATER QUALITY AND SEZ IMPROVEMENT PROJECT
DETAIL SHEET
PLACER COUNTY, CALIFORNIA

SHEET D-1

W.O. No. 3128703

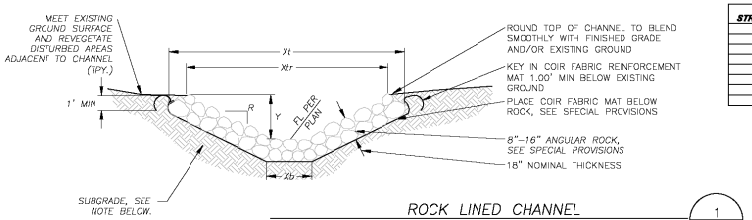

ROCK LINED CHANNEL

NTS

1 / D-2

STREET AND STATION**	WIDTH, Xt* (EXCAVATION)	WIDTH, Xtr (ROCK)	WIDTH Xb (EXCAVATION)	DEPTH, Y*	SLOPE RATIO, R

NOTES:
1. "Y*" DEPICTS MIN REQ'D DEPTH OF CHANNEL. "Xt*" DEPICTS MIN REQ'D WIDTH OF CHANNEL AND R DEPICTS SIDE SLOPE. HEIGHT/RATIO MAY VARY DEPENDING ON EXISTING TERRAIN. TO MAINTAIN A 2' SHOULDER AT ROADWAYS. SEE PLAN VIEWS AND CROSS-SECTIONS FOR GRADING LIMITS. ACTUAL DIMENSIONS ARE AS SHOWN ON PLAN AND CROSS-SECTION VIEWS.
2. SEE SPECIAL PROVISIONS FOR SUBGRADE COMPACTION REQUIREMENTS.
3. THE DIMENSIONS DEPICTED IN THIS TABLE ARE MINIMUM DIMENSIONS. ACTUAL DIMENSIONS ARE AS SHOWN ON THE PLANS AND CROSS-SECTIONS.

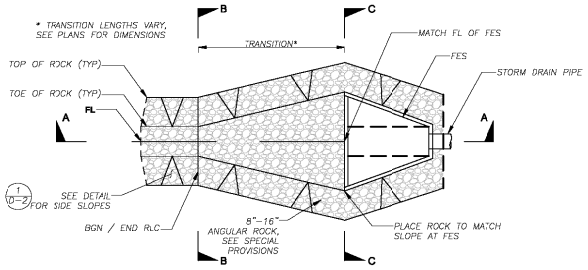

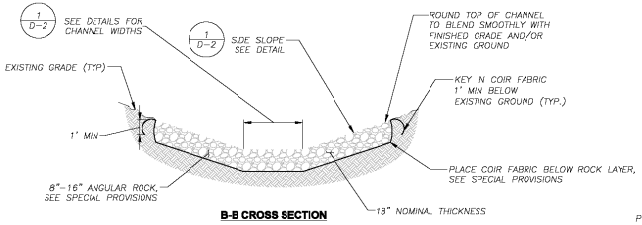

B-B CROSS SECTION

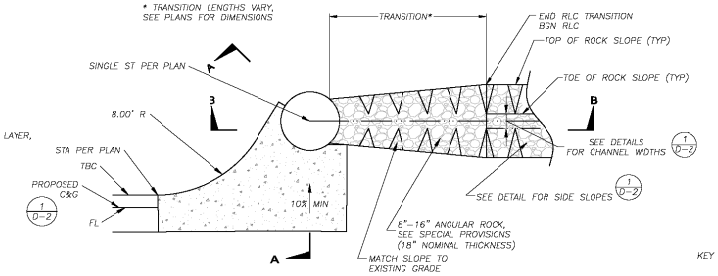

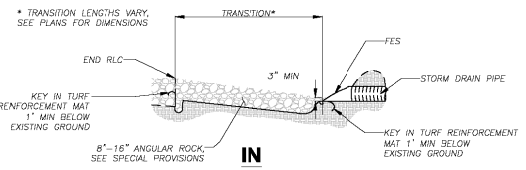

IN

A-A CROSS SECTION

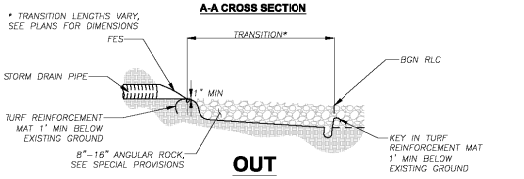

OUT

A-A CROSS SECTION

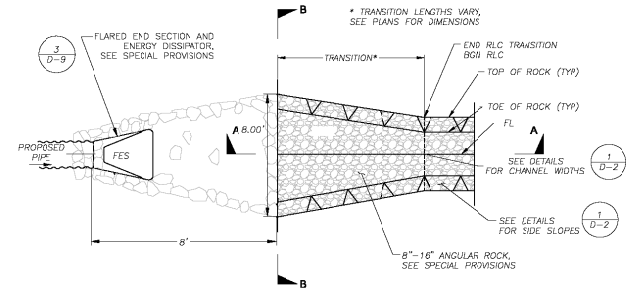

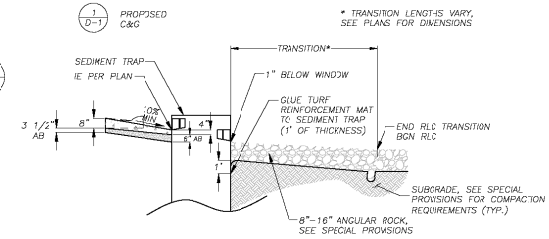

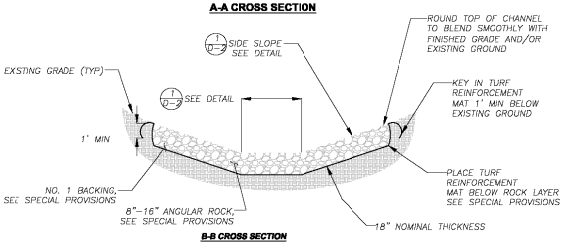

B-B CROSS SECTION

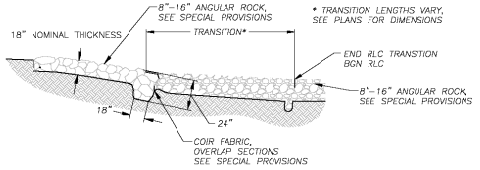

NOTES: 1. SEE SPECIAL PROVISIONS FOR SUBGRADE COMPACTION REQUIREMENTS.
2. TRANSITION LENGTHS VARY. SEE PLANS FOR ACTUAL LENGTH.

A-A CROSS SECTION

ROCK DISSIPATOR INTO ROCK LINED CHANNEL TRANSITION

NTS

2 / D-2

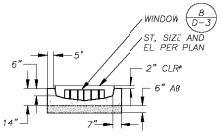

* TYPICAL AT BOTH SEDIMENT TRAPS WHERE TOP OF CURB IS ADJACENT TO RIM

ROCK LINED CHANNEL TRANSITION TO SEDIMENT TRAP

NTS

3 / D-2

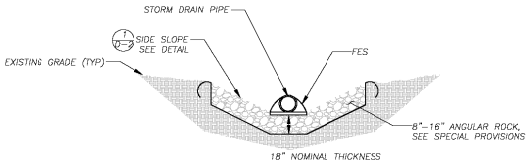

C-C CROSS SECTION

ROCK LINED CHANNEL TRANSITION TO FES

NTS

4 / D-2

REVISION			
NUMBER	DATE	DESCRIPTION	BY

PREPARED UNDER THE SUPERVISION OF :

REGISTERED CIVIL ENGINEER

DATE:

DESIGNED: MBG	DRAWN: MBG
CHECKED: SP	DATE: 12/07
ROAD NUMBER: N/A	

PLACER COUNTY
DEPARTMENT OF PUBLIC WORKS

ENTRIX
1048 Ski Run Boulevard
South Lake Tahoe, CA 96150
(530) 542-0201 Main

KINGS BEACH WATER QUALITY AND SEZ IMPROVEMENT PROJECT
DETAIL SHEET
PLACER COUNTY, CALIFORNIA

SHEET D-2

W.O. No. 3128703

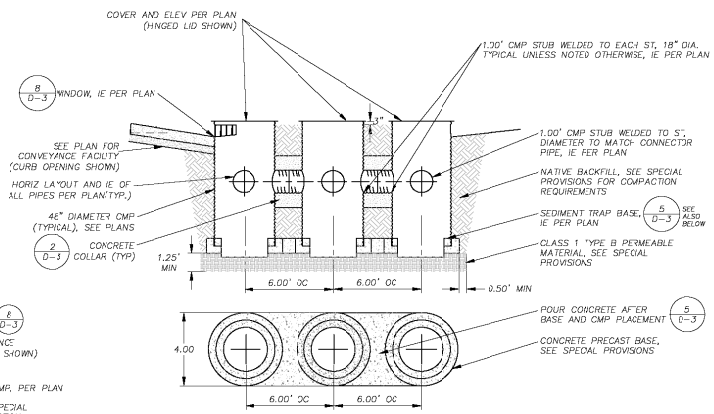

NOTES: 1. SEE SPECIAL PROVISIONS FOR SUBGRADE COMPACTION REQUIREMENTS.
2. SEE SPECIFICATIONS FOR CONCRETE MATERIAL.

TRIPLE SEDIMENT TRAP
NTS — 4 / D-3

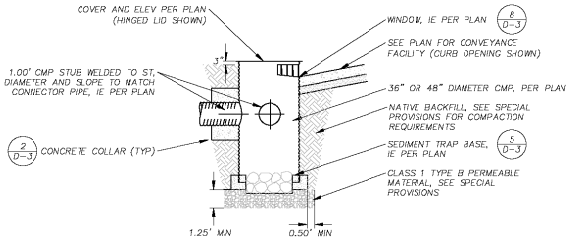

NOTE: SEE SPECIAL PROVISIONS FOR SUBGRADE COMPACTION REQUIREMENTS.

SINGLE SEDIMENT TRAP
NTS — 3 / D-3

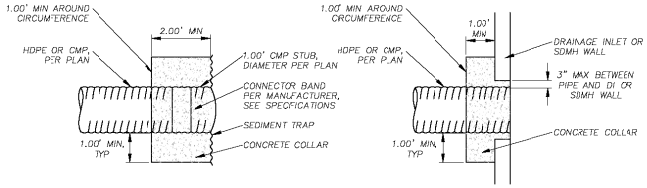

NOTE: SEE SPECIAL PROVISIONS FOR CONCRETE SPECIFICATIONS.

CONCRETE COLLAR
NTS — 2 / D-3

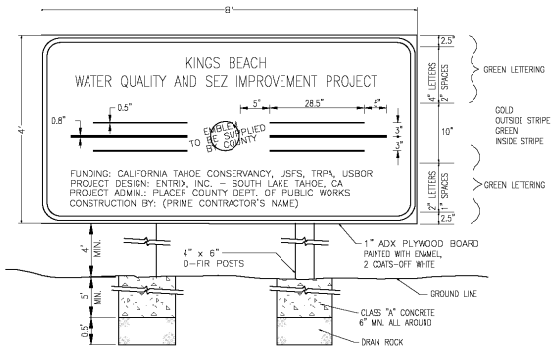

PROJECT SIGN
NTS — 1 / D-3

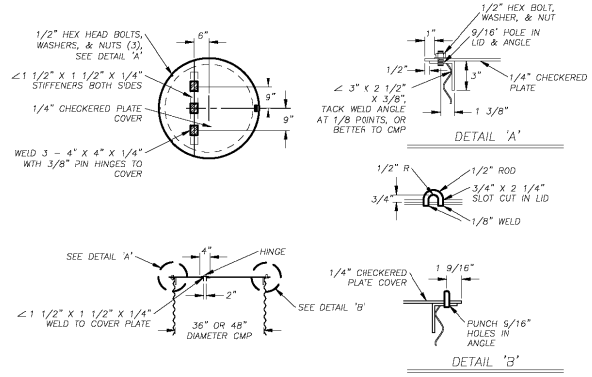

HINGED LID
NTS — 6 / D-3

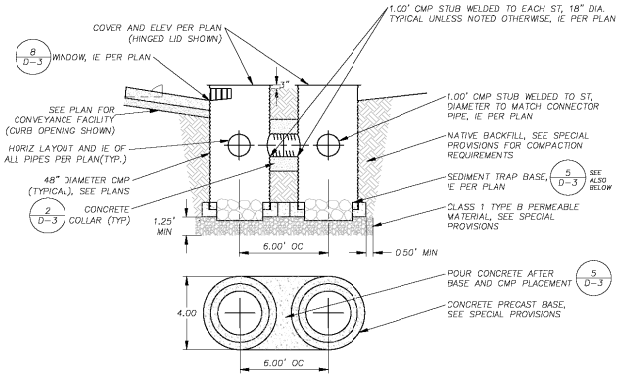

NOTES: 1. SEE SPECIAL PROVISIONS FOR SUBGRADE COMPACTION REQUIREMENTS.
2. SEE SPECIFICATIONS FOR CONCRETE MATERIAL.

DOUBLE SEDIMENT TRAP
NTS — 7 / D-3

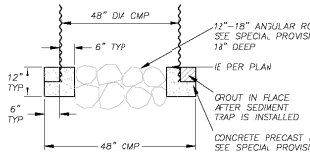

SEDIMENT TRAP BASE
NTS — 5 / D-3

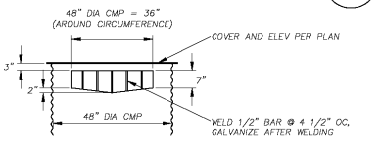

WINDOW
NTS — 8 / D-3

REVISION			
NUMBER	DATE	DESCRIPTION	BY

PREPARED UNDER THE SUPERVISION OF :

REGISTERED CIVIL ENGINEER

DATE:

DESIGNED: MBG	DRAWN: MBG
CHECKED: SP	DATE: 12/07
ROAD NUMBER: N/A	

PLACER COUNTY
DEPARTMENT OF PUBLIC WORKS

ENTRIX
1048 Ski Run Boulevard
South Lake Tahoe, CA 96150
(530) 542-0201 Main

KINGS BEACH WATER QUALITY AND SEZ IMPROVEMENT PROJECT
DETAIL SHEET
PLACER COUNTY, CALIFORNIA

SHEET D-3

W.O. No. 3128703

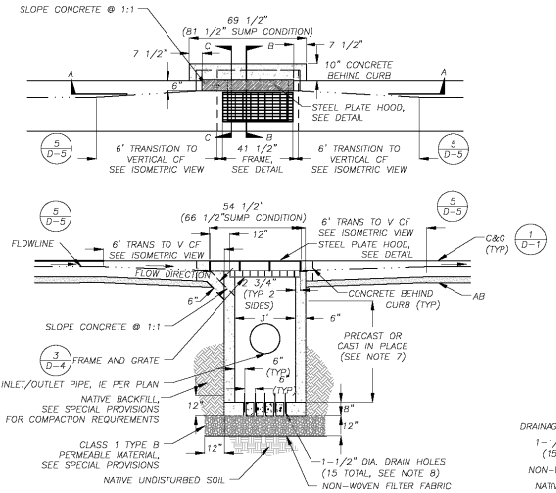

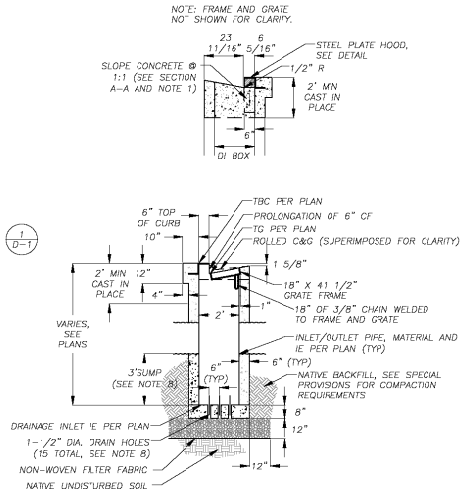

DRAINAGE INLET

NTS

1 / D-4

DRAINAGE INLET NOTES:

1. THE 1:1 SLOPED CONCRETE SECTION IS TO BE POSITIONED ON THE UP SLOPE SIDE OF THE DRAINAGE INLET. AT SAG LOCATIONS THE 1:1 SLOPED CONCRETE SECTION IS TO BE ON BOTH SIDES OF THE DRAINAGE INLET.
2. DEPRESS GUTTER FLOWLINE FROM 3 5/8" TO 6", AS MEASURED FROM TBC, PER 6" CURB TRANSITION DETAIL.
3. FLOOR OF THE DRAINAGE INLET SHALL BE PLACED PRIOR TO OR AT THE SAME TIME AS THE SIDE WALLS, OR TIED WITH REBAR.
4. FRAME AND GRATE SHALL CONFORM TO THE FRAME AND GRATE DETAIL ON THE PLANS, D&L I-3542 OR EQUAL.
5. DRAINAGE INLET HOOD SHALL BE 1/2" MINIMUM THICKNESS STEEL PLATE.
6. WALL REINFORCING (NOT SHOWN) SHALL BE #4 BARS @ 18" OC EACH WAY, PLACED 1 1/2" CLEAR FROM INSIDE OF BOX. INLET BOTTOM REINFORCING NOT REQUIRED EXCEPT AS NOTED IN NOTE 3, ABOVE.
7. A PRECAST UNIT WITH CAST-IN-PLACE TOP SECTION TO RECEIVE GRATE, FRAME AND HOOD WILL BE AN ACCEPTABLE ALTERNATIVE TO CAST-IN-PLACE UNITS. DRAINAGE INLETS THAT ARE ENTIRELY PRECAST ARE NOT ACCEPTABLE. CAST-IN-PLACE TOP SECTIONS SHALL BE DOWELED INTO THE CURB AND GUTTER WITH 3-#4 BARS, 18" LONG, ON EACH SIDE OF DRAINAGE INLET.
8. WHEN DIRECTED BY ENGINEER, DRAINAGE INLET IE SHALL EQUAL IE OF OUTLET PIPE. CONTRACTOR TO SLOPE DRAINAGE INLET FLOOR TO DRAIN AND OMIT HOLES.

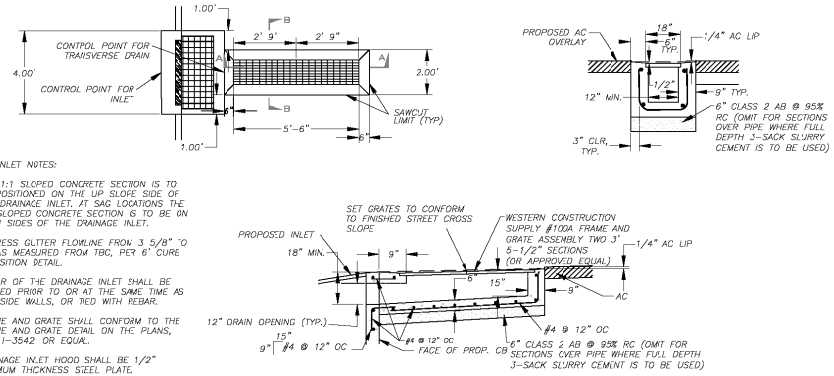

NOTES:

1. OPENING TO CATCH BASIN TO BE 12" HIGH BY A MINIMUM OF 12" WIDE
2. INLET GRATES AND FRAME SHALL BE GALVANIZED AFTER FABRICATION.
3. GRATES SHALL BE ATTACHED TO FRAME WITH 18" OF 3/16" CHAIN WELDED TO FRAME AND GRATES.

TRANSVERSE DRAIN

NTS

2 / D-4

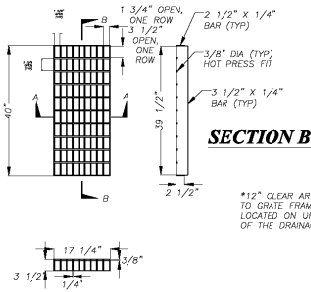

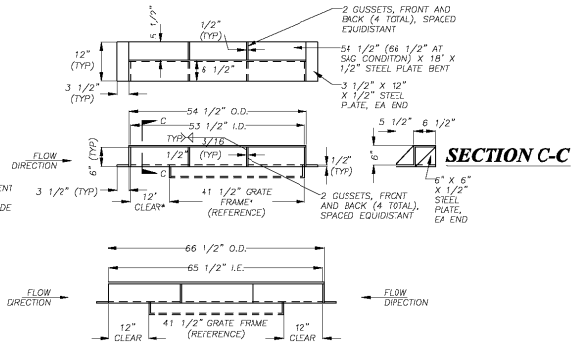

GRATE & FRAME

NTS

3 / D-4

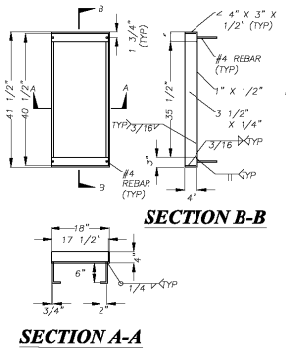

STEEL PLATE HOOD

NTS

4 / D-4

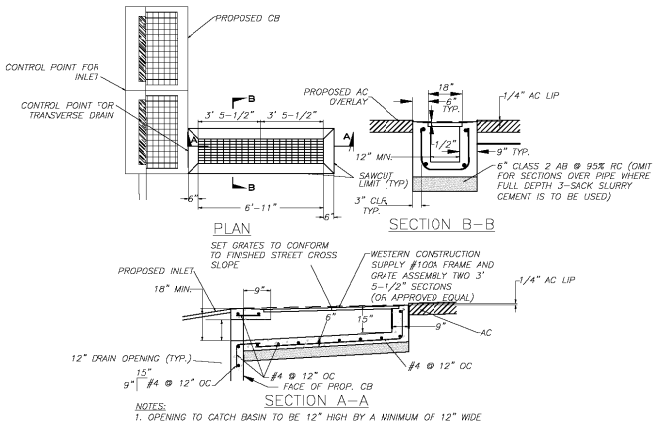

NOTES:

1. OPENING TO CATCH BASIN TO BE 12" HIGH BY A MINIMUM OF 12" WIDE
2. INLET GRATES AND FRAME SHALL BE GALVANIZED AFTER FABRICATION.
3. GRATES SHALL BE ATTACHED TO FRAME WITH 18" OF 1/2" CHAIN WELDED TO FRAME AND GRATES.
4. A CATCH BASIN IS CONSIDERED THE SAME THING AS DRAINAGE INLET.

DOUBLE DRAINAGE INLET WITH TRANSVERSE DRAIN

NTS

5 / D-4

REVISION			
NUMBER	DATE	DESCRIPTION	BY

PREPARED UNDER THE SUPERVISION OF :

REGISTERED CIVIL ENGINEER

DATE:

DESIGNED: MBC	DRAWN: MBG
CHECKED: SP	DATE: 12/07
ROAD NUMBER: N/A	

PLACER COUNTY
DEPARTMENT OF PUBLIC WORKS

ENTRIX
1046 Sk Run Boulevard
South Lake Tahoe, CA 96150
(530) 542-0201 Main

KINGS BEACH WATER QUALITY AND SEZ IMPROVEMENT PROJECT
DETAIL SHEET
PLACER COUNTY, CALIFORNIA

SHEET D-4

W.O. No. 3128703

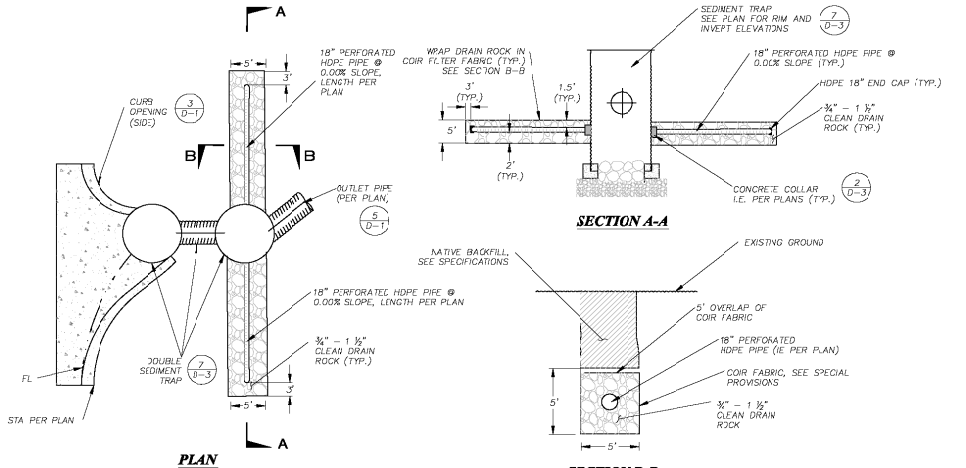

INFILTRATION TRENCH — NTS — 1/D-5

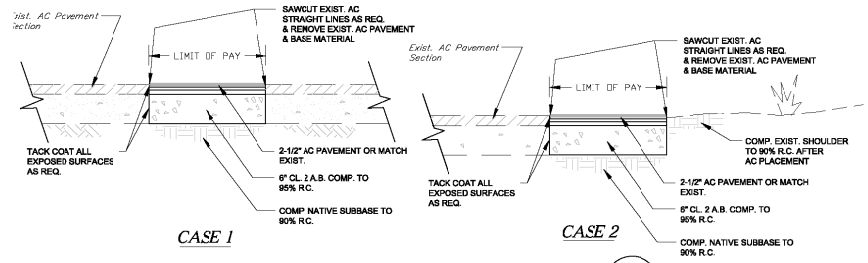

AC PAVEMENT PATCH — NTS — 2/D-5

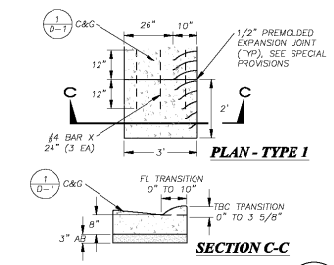

CURB END TRANSITION (TYPE 1) — NTS — 3/D-5

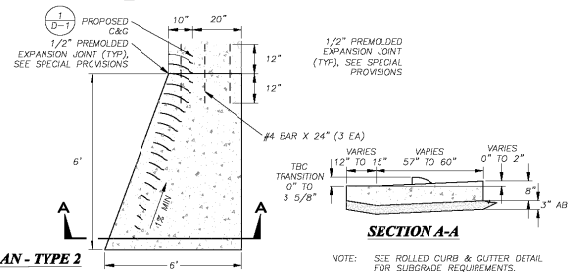

CURB END TRANSITION (TYPE 2) — NTS — 4/D-5

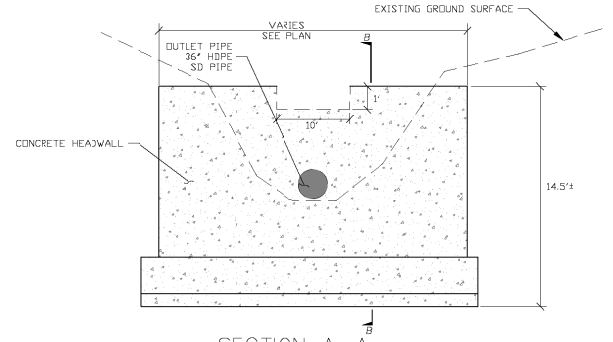

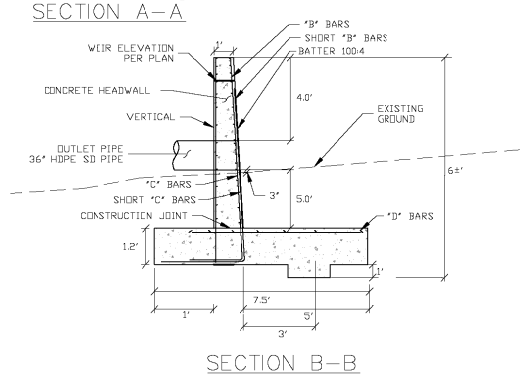

CONCRETE HEADWALL — NTS — 6/D-5

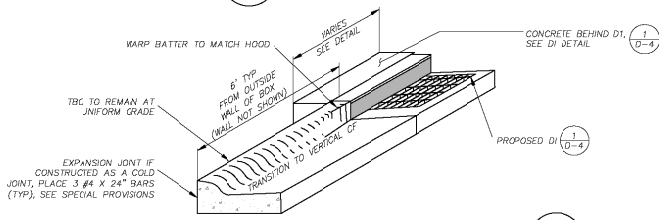

TRANSITION TO VERTICAL CURB FACE — NTS — 5/D-5

REVISION			
NUMBER	DATE	DESCRIPTION	BY

PREPARED UNDER THE SUPERVISION OF :

REGISTERED CIVIL ENGINEER

DATE:

DESIGNED: MBG	DRAWN: MBG
CHECKED: SP	DATE: 12/07
ROAD NUMBER: N/A	

PLACER COUNTY
DEPARTMENT OF PUBLIC WORKS

ENTRIX
1048 Sk: Rus Boulevard
South Lake Tahoe, CA 96150
(530) 542-0201 Main

KINGS BEACH WATER QUALITY AND SEZ IMPROVEMENT PROJECT
DETAIL SHEET
PLACER COUNTY, CALIFORNIA

SHEET D-5

W.O. No. 3128703

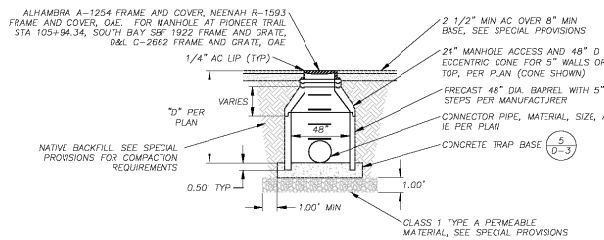

NOTES:

1. BARREL, CONE, AND FLAT TOP REINFORCEMENT PER MANUFACTURER'S REQUIREMENT, SEE SPECIAL PROVISIONS.
2. SEE SPECIAL PROVISIONS FOR SUBGRADE COMPACTION REQUIREMENTS

48" DIA. STORM DRAIN MANHOLE

NTS

1 / D-6

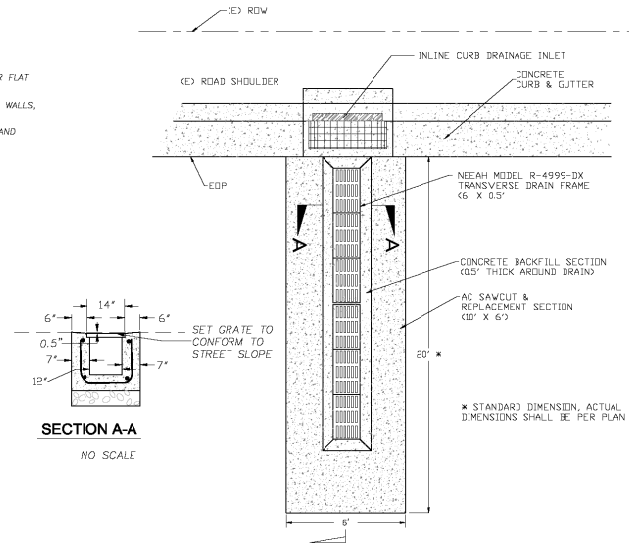

SECTION A-A

NO SCALE

SLOT DRAIN

NTS

2 / D-6

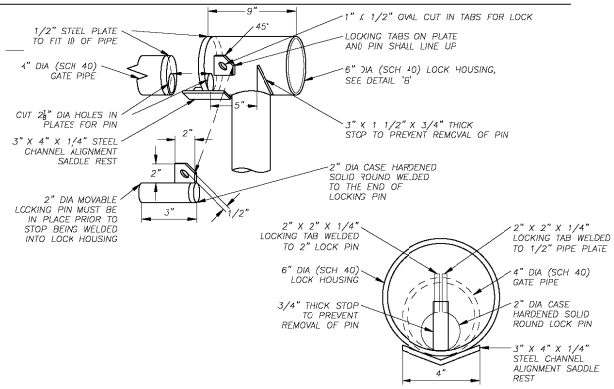

NOTE: ALL PIPES SHALL BE POWDER COATED DARK GREEN AT SHOP PRIOR TO INSTALLATION.

ACCESS GATE

NTS

3 / D-6

NOTES:

1. PIPE OPENINGS SHALL BE AS SHOWN ON PLAN VIEW (IE) AND HC SHEETS (HORIZONTAL ALIGNMENT) AND PER SPECIAL PROVISIONS
2. AC HATCHING PER 48" DIAMETER STORM DRAIN MANHOLE REQUIREMENTS AND SPECIAL PROVISIONS

FOR COMPLETE DESIGN, AND PRODUCT INFORMATION, CONTACT JENSEN PRECAST COOK CONCRETE OR EQUIVALENT PRECAST PROVIDER.

CUSTOM SQUARE, RECTANGULAR AND ROUND OPENINGS AVAILABLE.

NOT A STOCK ITEM. REQUIRES LEAD TIME.

MANHOLE COMPONENTS SHALL CONFORM TO CURRENT SPECIFICATIONS, ASTM C-478, AND AASHTO NO. M199-93.

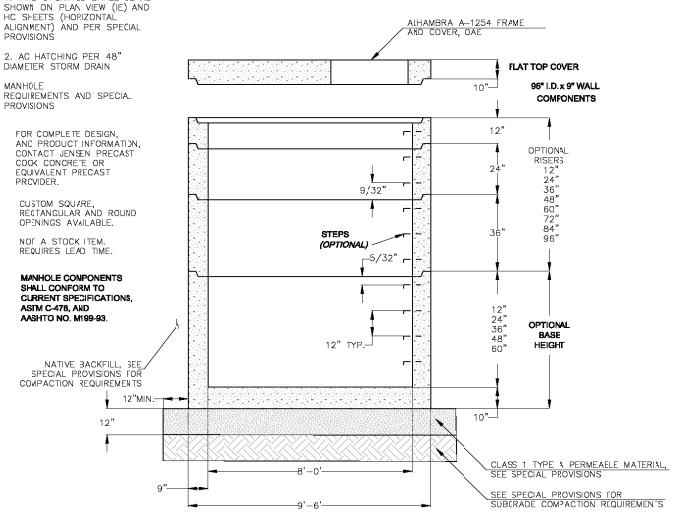

96" DIA. STORM DRAIN MANHOLE

NTS

4 / D-6

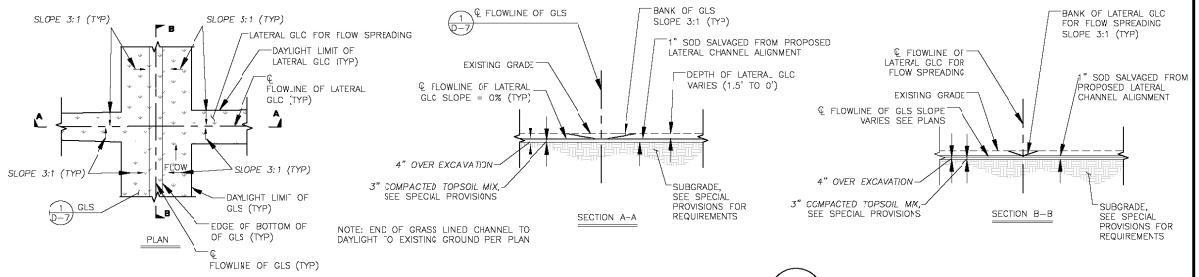

NOTE: END OF GRASS LINED CHANNEL TO DAYLIGHT TO EXISTING GROUND PER PLAN

LATERAL GRASS LINED CHANNEL

NTS

5 / D-6

REVISION			
NUMBER	DATE	DESCRIPTION	BY

PREPARED UNDER THE SUPERVISION OF :

REGISTERED CIVIL ENGINEER

DATE:

DESIGNED: MBG	DRAWN: MBG
CHECKED: SP	DATE: 12/07
ROAD NUMBER: N/A	

PLACER COUNTY
DEPARTMENT OF PUBLIC WORKS

ENTRIX
1048 Sk Rue Boulevard
South Lake Tahoe, CA 96150
(530) 542-0201 Main

KINGS BEACH WATER QUALITY AND SEZ IMPROVEMENT PROJECT
DETAIL SHEET
PLACER COUNTY, CALIFORNIA

SHEET D-6

W.O. No. 3128703

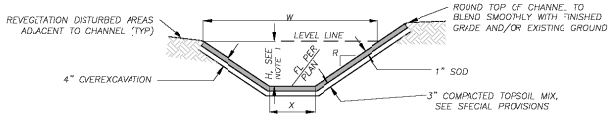

STREET AND STATION	TOP WIDTH, W	BOTTOM WIDTH, X	DEPTH, h	SLOPE RATIO, R

* VARIES IN ORDER TO MAINTAIN 0.10% CHANNEL FL SLOPE

** VARIES IN ORDER TO MAINTAIN 2' SHOULDER AT EP AND REMAIN WITHIN COUNTY ROW LIMITS

NOTES:
1. "H" DEPICTS MIN REQ'D HEIGHT OF CHANNEL. FINISHED TOP WIDTH AND SIDE SLOPE HEIGHT MAY VARY DEPENDING ON EXISTING TERRAIN AND THE NEED TO MAINTAIN A 2' SHOULDER AT ROADWAYS. SEE PLANS AND CROSS SECTION SHEETS FOR GRADING LIMITS.
2. DIMENSIONS SPECIFIED ARE TO BE MEASURED FROM TOP OF 1" SOD.
3. SEE SPECIAL PROVISIONS FOR OVEREXCAVATION, TOPSOIL MIX, AND COMPACTION REQUIREMENTS.

GRASS LINED SWALE (1 / D-7)

NTS

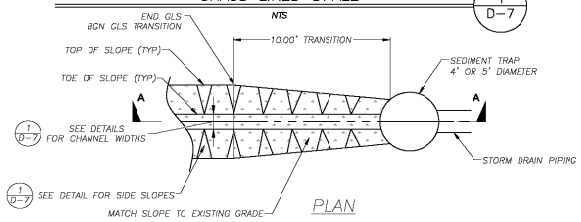

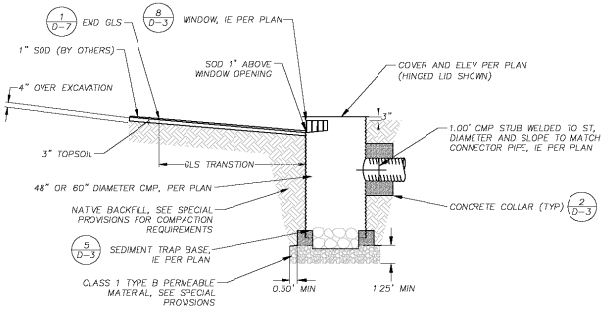

NOTE: SEE SPECIAL PROVISIONS FOR SUBGRADE COMPACTION REQUIREMENTS.

SECTION A-A

GLS TO ST TRANSITION (5 / D-7)

NTS

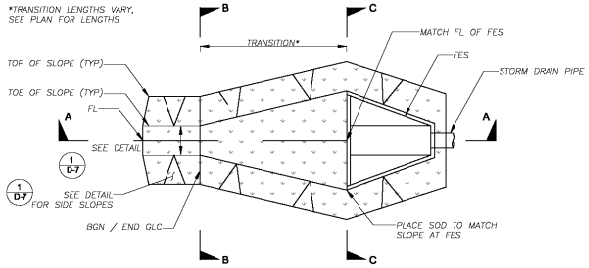

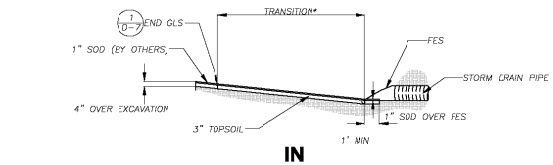

IN

A-A CROSS SECTION

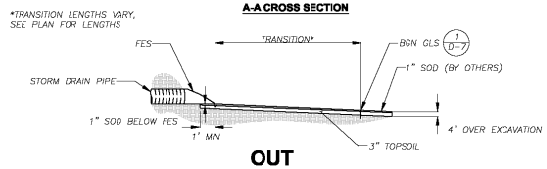

OUT

A-A CROSS SECTION

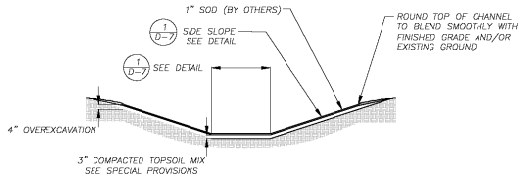

B-B CROSS SECTION

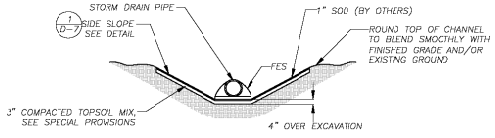

C-C CROSS SECTION

FES TO GLS TRANSITION (3 / D-7)

NTS

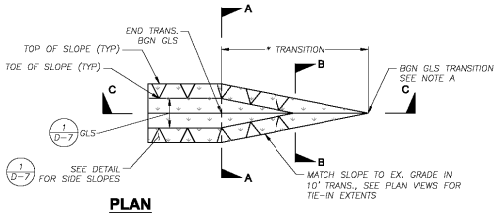

PLAN

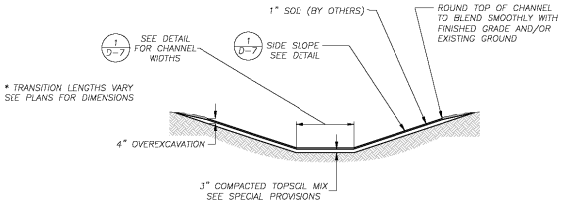

SECTION A-A

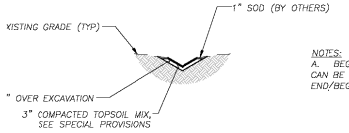

NOTES:
A. BEGIN/END OF GRASS LINED SWALE TRANSITION CAN BE AT A SEDIMENT TRAP (IE WINDOW) WITH A END/BEGIN WIDTH OF THE WINDOW OPENING.

SECTION B-B

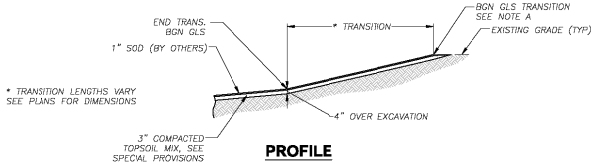

PROFILE

BEGIN/END GLS TRANSITION (4 / D-7)

NTS

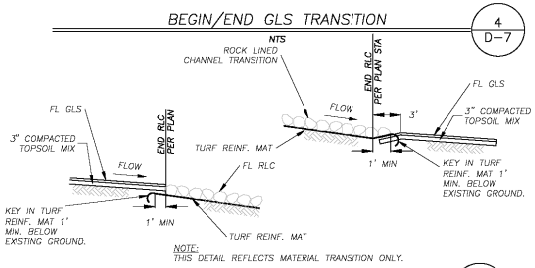

NOTE:
THIS DETAIL REFLECTS MATERIAL TRANSITION ONLY.

GLS & RLC TRANSITIONS (2 / D-7)

NTS

REVISION			
NUMBER	DATE	DESCRIPTION	BY

PREPARED UNDER THE SUPERVISION OF :

REGISTERED CIVIL ENGINEER

DATE:

DESIGNED: MBG	DRAWN: MBG
CHECKED: SP	DATE: 12/07
ROAD NUMBER: N/A	

PLACER COUNTY
DEPARTMENT OF PUBLIC WORKS

ENTRIX
1048 Sk Rue Boulevard
South Lake Tahoe, CA 96150
(530) 542-0201 Main

KINGS BEACH WATER QUALITY AND SEZ IMPROVEMENT PROJECT
DETAIL SHEET
PLACER COUNTY, CALIFORNIA

SHEET D-7

W.O. No. 3128703

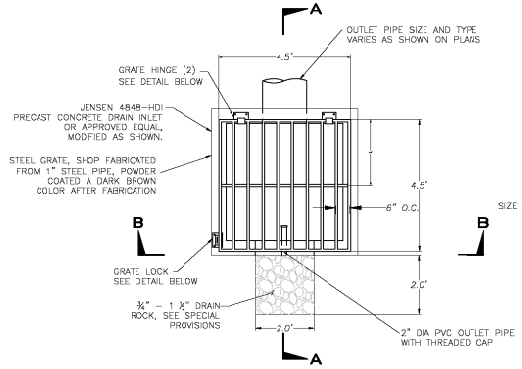

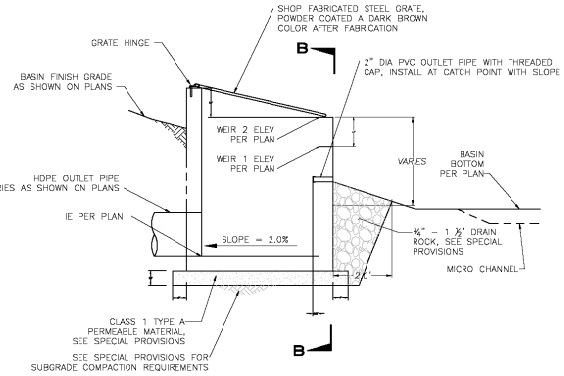

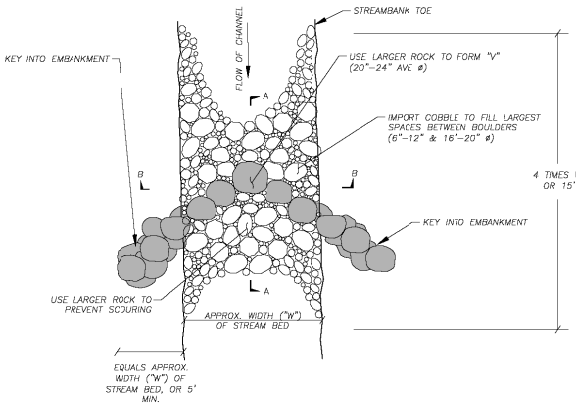

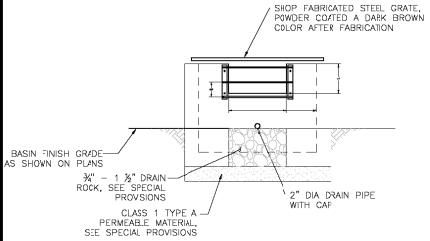

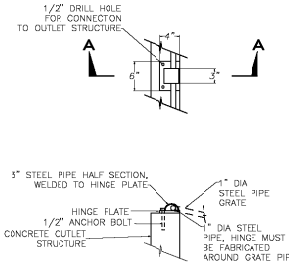

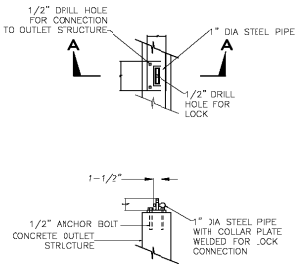

BASIN OUTLET STRUCTURE
NTS
1
D-8

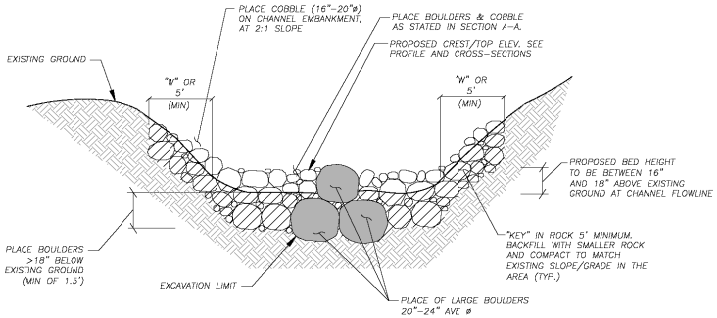

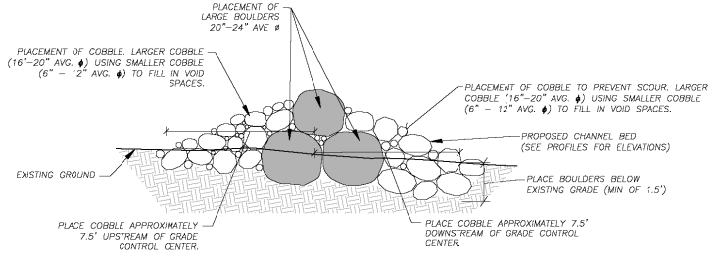

GRADE CONTROL STRUCTURE
NTS
2
D-8

REVISION			
NUMBER	DATE	DESCRIPTION	BY

PREPARED UNDER THE SUPERVISION OF :

REGISTERED CIVIL ENGINEER

DATE:

DESIGNED: MBG	DRAWN: MBG
CHECKED: SP	DATE: 12/07
ROAD NUMBER: N/A	

PLACER COUNTY
DEPARTMENT OF PUBLIC WORKS

ENTRIX
1048 Ski Run Boulevard
South Lake Tahoe, CA 96150
(530) 542-0201 Main

KINGS BEACH WATER QUALITY AND SEZ IMPROVEMENT PROJECT
DETAIL SHEET
PLACER COUNTY, CALIFORNIA

SHEET
D-8

W.O. No. 3128703

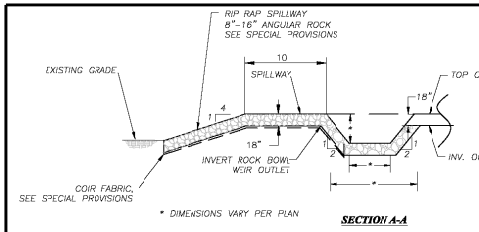

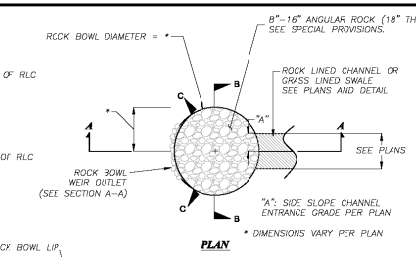

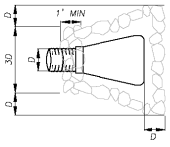

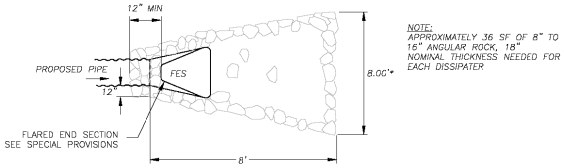

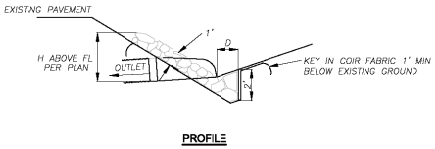

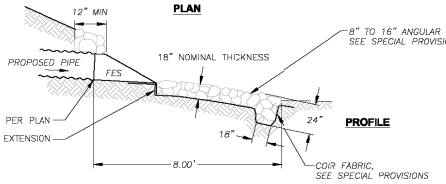

NOTES:
1. ALL FES SHALL BE AS SHOWN ON THE PLANS.
2. SEE SPECIAL PROVISIONS FOR SUBGRADE COMPACTION REQUIREMENTS.

FLARED END SECTION (FES) — NTS — 2 / D-9

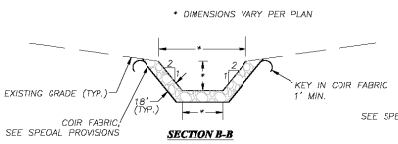

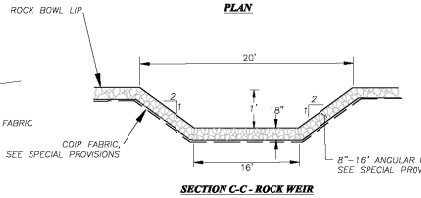

ROCK BOWL AND WEIR — NTS — 1 / D-9

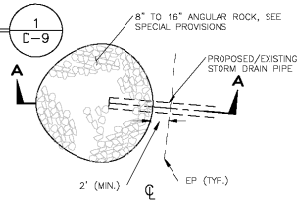

FLARED END SECTION (FES) AND ROCK DISSIPATOR — NTS — 3 / D-9

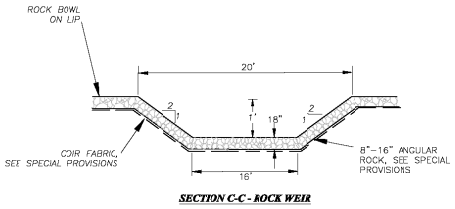

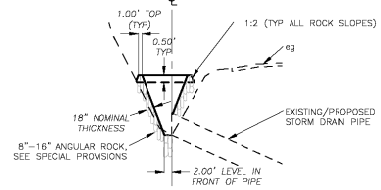

ROCK BOWL (INLET) — NTS — 5 / D-9

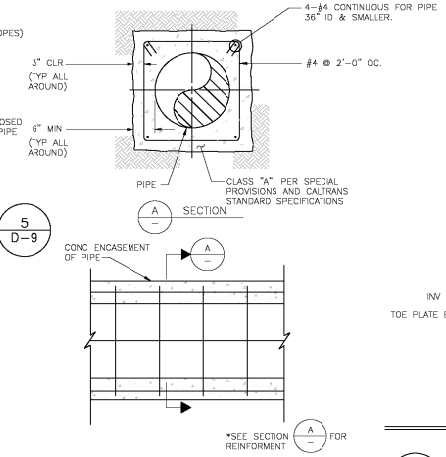

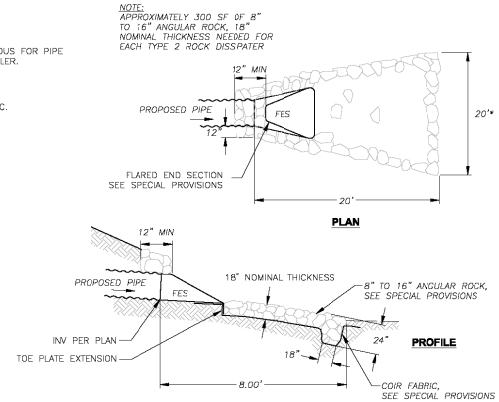

NOTES:
1. ALL FES SHALL BE AS SHOWN ON THE PLANS.
2. SEE SPECIAL PROVISIONS FOR SUBGRADE COMPACTION REQUIREMENTS.

ROCK DISSIPATOR, TYPE 2 — NTS — 6 / D-9

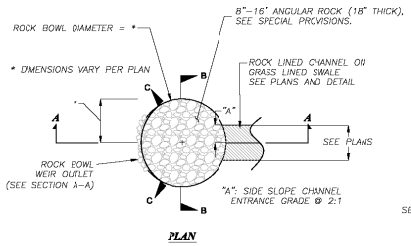

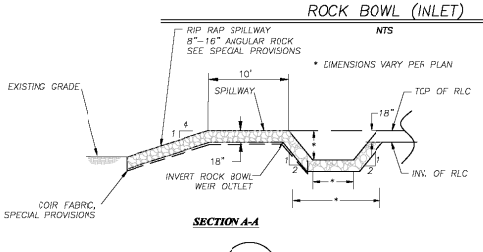

ROCK WEIR — NTS — 4 / D-9

CONCRETE ENCASEMENT OF PIPE — NTS — 6 / D-9

REVISION			
NUMBER	DATE	DESCRIPTION	BY

PREPARED UNDER THE SUPERVISION OF :

REGISTERED CIVIL ENGINEER

DATE:

DESIGNED: MBG	DRAWN: MBG
CHECKED: SP	DATE: 12/07
ROAD NUMBER: N/A	

PLACER COUNTY
DEPARTMENT OF PUBLIC WORKS

ENTRIX
1046 Bk: Rus Boulevard
South Lake Tahoe, CA 96150
(530) 542-0201 Main

KINGS BEACH WATER QUALITY AND
SEZ IMPROVEMENT PROJECT
DETAIL SHEET
PLACER COUNTY, CALIFORNIA

SHEET D-9

W.O. No. 3128703

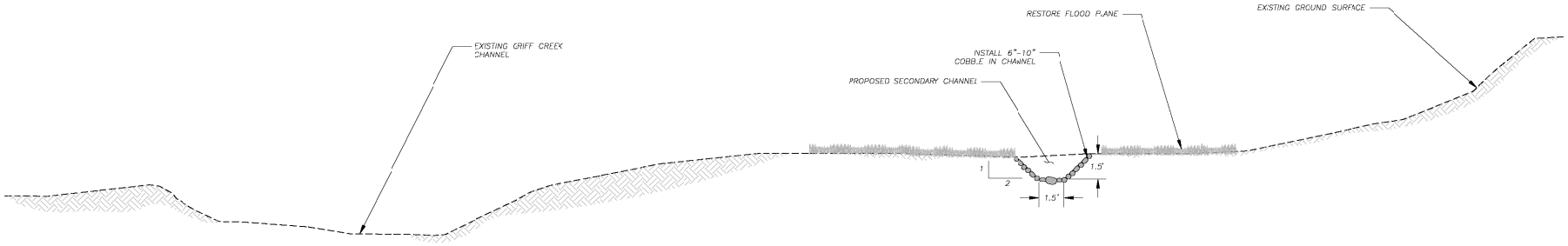

DRAINAGE BASIN

NTS

1
D-10

REVISION			
NUMBER	DATE	DESCRIPTION	BY

PREPARED UNDER THE SUPERVISION OF :

REGISTERED CIVIL ENGINEER

DATE:

DESIGNED: MBC	DRAWN: MBG
CHECKED: SP	DATE: 12/07
ROAD NUMBER: N/A	

PLACER COUNTY
DEPARTMENT OF PUBLIC WORKS

ENTRIX
1048 Sk Rue Boulevard
South Lake Tahoe, CA 96159
(530) 542-0201 Main

KINGS BEACH WATER QUALITY AND SEZ IMPROVEMENT PROJECT
DETAIL SHEET
PLACER COUNTY, CALIFORNIA

SHEET
D-10

W.O. No. 3128703

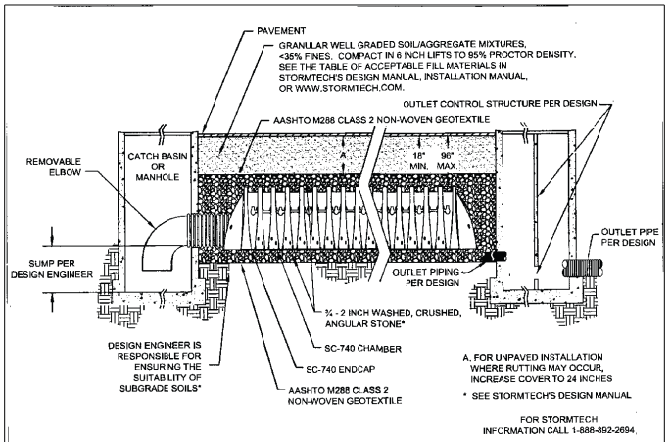

STORMTECH SC-740 CHAMBER SYSTEM
INLET OUTLET DETAIL
NOT TO SCALE

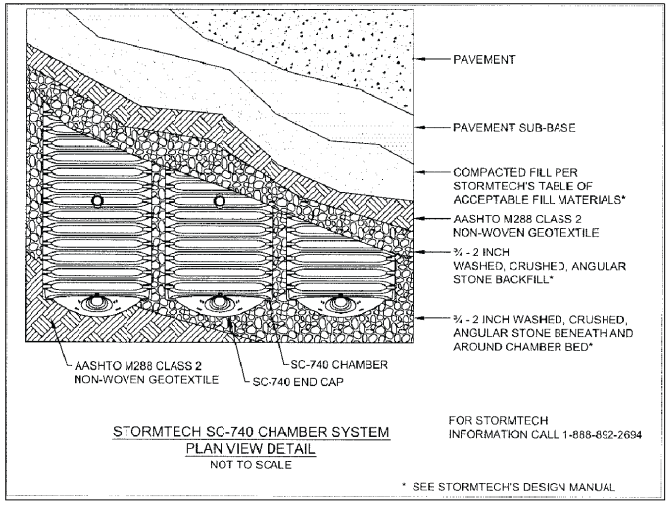

STORMTECH SC-740 CHAMBER SYSTEM
PLAN VIEW DETAIL
NOT TO SCALE

FOR STORMTECH INFORMATION CALL 1-888-892-2694

* SEE STORMTECH'S DESIGN MANUAL

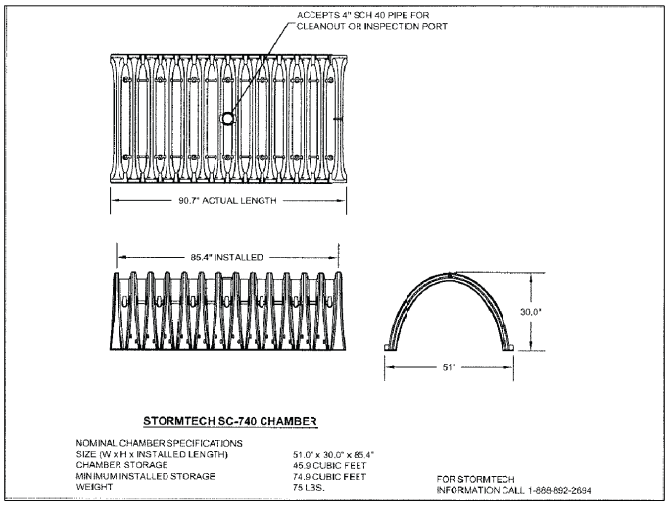

STORMTECH SC-740 CHAMBER

NOMINAL CHAMBER SPECIFICATIONS

SIZE (W x H x INSTALLED LENGTH)	51.0" x 30.0" x 85.4"
CHAMBER STORAGE	45.9 CUBIC FEET
MINIMUM INSTALLED STORAGE	74.9 CUBIC FEET
WEIGHT	75 LBS.

FOR STORMTECH INFORMATION CALL 1-888-892-2694

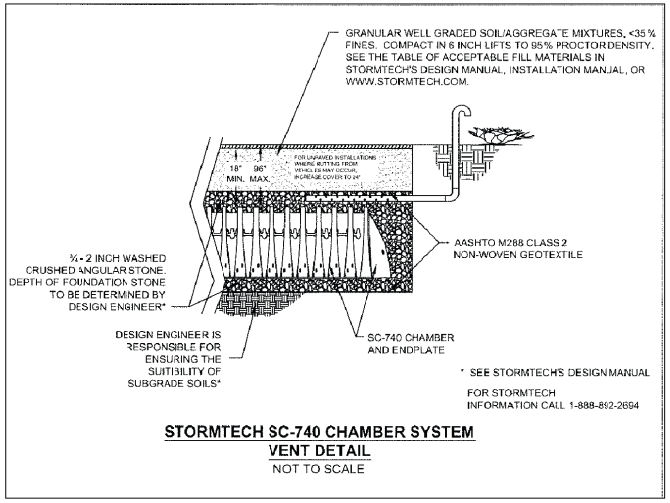

* SEE STORMTECH'S DESIGN MANUAL

FOR STORMTECH INFORMATION CALL 1-888-892-2694

STORMTECH SC-740 CHAMBER SYSTEM
VENT DETAIL
NOT TO SCALE

STORMTECH INFILTRATION GALLERY
NTS

1
D-11

REVISION			
NUMBER	DATE	DESCRIPTION	BY

PREPARED UNDER THE SUPERVISION OF :

REGISTERED CIVIL ENGINEER

DATE:

DESIGNED: MBG	DRAWN: MBG
CHECKED: SP	DATE: 12/07
ROAD NUMBER: N/A	

PLACER COUNTY
DEPARTMENT OF PUBLIC WORKS

ENTRIX
1048 Sk Rus Boulevard
South Lake Tahoe, CA 96150
(530) 542-0201 Main

KINGS BEACH WATER QUALITY AND SEZ IMPROVEMENT PROJECT
DETAIL SHEET
PLACER COUNTY, CALIFORNIA

SHEET D-11

W.O. No. 3128703