2.0 PROJECT DESCRIPTION

This chapter describes the *Dollar Creek Shared-Use Trail Project* (Project). Sections 2.1, 2.2 and 2.3 describe the project background, previous public involvement, and anticipated future environmental process and review, respectively. Section 2.4 details the project objectives and sections 2.5 through 2.7 detail the various components of the Project including facility features and construction controls, revegetation and restoration strategies, water quality best management practices (BMPs), and operations, maintenance and monitoring plan.

2.1 PROJECT BACKGROUND

2.1.1 Summary of Past Studies

The current Project is the western most end of an approximately eight-mile long North Tahoe Bike Trail corridor identified by the TRPA to link Tahoe City to Kings Beach, California. TRPA identified the trail corridor with its adoption of the Regional Goals and Policies Plan (1987), Regional Transportation Plan (RTP) (TRPA/TMPO 2008) and Air Quality Plan (AQP) (1999 and 2003), Environmental Improvement Program (EIP) (2001) and Lake Tahoe Regional Bicycle and Pedestrian Master Plan (BPMP) (TMPO 2010).

During past study of the North Tahoe Bike Trail corridor, lead agency staff considered many different trail alignments, trying to identify the best transportation/recreation route with the fewest conflicts. Determinations for reasonableness considered compliance with Caltrans Class 1, AASHTO and ADA standards, presence of stream environment zones (SEZ) and other sensitive lands, existing land use patterns, existing transportation links, public health and safety considerations, economic feasibility and recent regional planning activities in the context of the objectives and purpose and need of the Project. Of the various trail alignments studied in the past, it's important to note why an alignment located adjacent to SR 28 was previously rejected from further consideration. The reasons included displacement of existing parking, encroachment onto private driveways, substantial tree removal and the need for retaining walls, steep grades, and utility displacement. The reasons for elimination in 1990 are still applicable, and serve as justification for why a SR 28 alignment was not further studied as part of this analysis.

2.1.2 Land Ownership

The shared-use trail alignment being analyzed traverses primarily through NTPUD and Conservancy ownerships. The majority of these lands were acquired as part of two key land acquisitions: the Firestone Acquisition and the Dollar Estate Acquisition.

Firestone Acquisition. In June 1988, the Conservancy Board authorized an Acquisition Grant in the amount of $1.186 million dollars to NTPUD in an action entitled "North Tahoe Bike Trail Acquisition Project." The purpose of the acquisition was to secure the right-of-way necessary to allow construction of an approximately "12-foot wide paved path" with two-foot wide shoulders on either side. NTPUD would own and manage the acquired land (and ultimately maintain the future site improvements for which the acquisition was authorized). Until the trail improvements are installed, the property is maintained as open space, except as authorized by the Conservancy Board. Similarly, no interest in the property can be transferred without the consent of the Conservancy Board. Additional conditions of the grant require NTPUD to assume all management, operations and maintenance costs of this and future projects involving the property.

Dollar Estate Acquisition. In May 1989, the Conservancy Board authorized acquisition of 940 acres of land comprised of 11 parcels known as the Dollar Estate. The expenditure of $3.225 million dollars not

only preserved much of the watershed but also provided opportunities for passive and active recreation uses on the site. The staff recommendation presented to the Conservancy Board when they authorized acquisition stated: "The North Tahoe Bicycle Trail acquisition grant funded by the Conservancy in June 1988 identifies the property as a possible site for construction of the bike trail… If the bike trail is implemented in this location, the Conservancy could realize cost savings on its grant since the property will already be in State ownership."

The staff recommendation also noted the opportunity to integrate Burton Creek State Park uses with the Dollar Property, as discussed further in the Burton Creek State Park Master Plan (California State Parks 2005).

2.1.3 Previous Environmental Documentation – Placer County

The County has determined that an Initial Study (IS) shall be prepared in order to determine whether the potential exists for unmitigatable impacts resulting from the proposed Project. Relevant analysis from the County-wide General Plan and Community Plan Certified EIRs, and other project-specific studies and reports that have been generated to date, were used as part of the database for the Initial Study. The decision to prepare the Initial Study utilizing the analysis contained in the General Plan and Specific Plan Certified EIRs, and project-specific analysis summarized herein is supported by Sections 15168 and 15183 of the CEQA Guidelines.

Section 15183 states that "projects which are consistent with the development density established by existing zoning, community plan or general plan policies for which an EIR was certified shall not require additional environmental review, except as may be necessary to examine whether there are project-specific significant effects which are peculiar to the project or site." Thus, if an impact is not peculiar to the project or site, and it has been addressed as a significant effect in the prior EIR, or can be substantially mitigated by the imposition of uniformly applied development policies or standards, then additional environmental documentation need not be prepared for the project solely on the basis of that impact.

Section 15168 relating to Program EIRs indicates that where subsequent activities involve site-specific operations, the agency should use a written checklist or similar device to document the evaluation of the site and the activity, to determine whether the environmental effects of the operation were covered in the earlier Program EIR. A Program EIR is intended to provide the basis in an Initial Study for determining whether the later activity may have any significant effects. It can also be incorporated by reference to address regional influences, secondary effects, cumulative impacts, broad alternatives, and other factors that apply to the program as a whole.

The following documents serve as Program-level EIRs or EIRs prepared for similar actions:

- County-wide General Plan EIR
- Community Plan EIR
- Specific Plan Zoning EIR
- 1990 North Tahoe Bike Trail EIR/EIS

The above stated documents are available for review Monday through Friday, 8am to 5pm, at the Placer County Community Development Resource Agency public counter, 3091 County Center Drive, Auburn, CA 95603.

2.2 PUBLIC INVOLVEMENT

Placer County staff hosted public input opportunities and solicited written comments related to the Project. The public scoping processes involved public notice to nearby residents and other interested individuals and organizations. Public and agency comments received during these input opportunities drove project revisions and directed elements of the environmental review process. The County set up a web site to post project plans, requests for public comment and other correspondence related to the Project (http://www.placer.ca.gov/Departments/Works/Projects.aspx).

Placer County conducted Information Open House meetings for the Project on October 4 and October 18, 2011 at the North Tahoe Event Center. The purpose of the meetings was to share information about the preliminary Project design and environmental analysis process, as well as to receive public feedback. Five and 52 members of the public and agency representatives, respectively, attended the meetings.

While there was no legal requirement to conduct public meetings for this Project, Placer County sought to engage with the local community early in the planning process. Meeting notices were mailed to owners of the 298 residences located within 1,000 feet of the Project area. In an effort to get meeting information to non-owner tenants, planning staff also hand-delivered notices to residents of the Highlands and Cedar Flats neighborhoods. In addition, the Sierra Sun published information on the Project in their October 14, 2011 weekend edition.

As a result of public scoping efforts, 32 commenters submitted approximately 150 individual comments and questions pertaining to the following general topics:

- General support for, or opposition to, the Project;
- Questions about the Project description, design, and operation (e.g., handicap accessibility, trail dimensions and alternative designs, and questions about whether bathrooms will be provided, trash pickup, and the like);
- Questions regarding the proposed trail location within the Project area and suggestions for potential neighborhood connectors (e.g., concern about trail location through bouldering site, proximity to houses, location of paved trail over existing unpaved trails) and the need for connectivity between north shore communities and Tahoe City;
- Questions about the trail alignment (e.g., origination and ending points; why isn't the trail located along SR 28);
- Questions about the larger user group (type of rider or pedestrian) who uses shared-use trails;
- Questions about Project funding sources and the type and availability of funding (e.g., where will the funding come from, how much will the Project cost and should the money be used for other public needs, long-term maintenance costs);
- Concerns regarding potential Project impacts, both construction and operations: grading; impacts to flora, fauna and habitats (e.g., presence of unique plants, habitat loss for wildlife); impacts to existing recreation (e.g., cross-country ski center, bouldering area, mountain biking, dog walking); and impacts to public safety and neighborhood compatibility (e.g., access by motorized vehicles, user conflicts, trail steepness and grade, vandalism and littering in adjacent neighborhoods); and

- Request for clarification on the location of the proposed trailhead parking area and parking impacts (e.g., concerns about existing parking along Fulton Crescent and the potential for Project to increase cars/traffic in neighborhood, access through private property).

2.3 FUTURE ENVIRONMENTAL PROCESS AND REVIEW

This IS/IEC meets the requirements of CEQA and the TRPA Rules of Procedures and Code of Ordinances. This environmental document serves as a joint document to meet the environmental review requirements of CEQA for the County, Conservancy, Lahontan, CDFG and NTPUD and the Tahoe Regional Planning Compact for the TRPA. Each agency will use the document to make decisions based on the respective agency's planning policies and statutory requirements. Sections 1.1.1, 1.1.2 and 1.1.3 in Chapter 1 detail agency roles, policies, and decision responsibilities.

2.4 PROJECT PURPOSE

The purpose of the Project is to complete an accessible and continuous shared-use trail that establishes a convenient non-auto transportation alternative and high quality recreational experience for residents and visitors.

Given that the Lake Tahoe north shore roadway network suffers from excessive traffic congestion and a resultant degradation of air quality, there is a need for expansion, upgrade and connectivity to the existing bike trail system. Areas in North Lake Tahoe lack continuous paths for bicycles and pedestrians that provide high quality non-motorized transportation and recreational opportunities. Regional planning documents (e.g., TRPA/TMPO RTP and Goals and Policies) identify the important role that improvements to the bicycle and pedestrian trail network play in addressing these problems. The introductory paragraph of the BPMP Executive Summary dated 2010 states:

"Lake Tahoe communities have identified biking and walking opportunities as critical components of a well-rounded transportation system. A strong bicycle and pedestrian network draws people out of their cars, in turn boosting the economy, improving air quality, and creating attractive, healthy communities. Connected bicycle paths, sidewalks, and transit are the backbone of a people-oriented transportation system that supports neighborhoods, commercial districts, and recreation areas. This connected transportation system that centers on non-motorized travel will also help Lake Tahoe meet Tahoe Regional Planning Agency environmental thresholds and greenhouse gas reduction targets."

Local jurisdictions and State agencies have identified 162 miles of new infrastructure necessary for a complete bicycle and pedestrian network. The Dollar Creek Shared-Use Trail Project is an extension of the existing multi-use trail that ends immediately west of Dollar Drive and also an independent 2.2-mile section of the North Tahoe Bike Trail Project proposed to connect Dollar Hill to the North Tahoe Regional Park in Kings Beach, California, which the BPMP (TMPO 2010) identifies as one of the 12 highest priority network facilities to close gaps, attract high use and address Vehicle Miles Traveled (VMT), provide multi-model connections, and improve public safety. The Project purpose aligns with the vision of North Shore communities as quoted above.

2.5 PROJECT AREA

Figure 1 in Chapter 1 presents the regional location map and Figure 2 illustrates the general location of the project area and Project alignment in the northern portion of the Lake Tahoe Basin. The TRPA revised Code of Ordinances (revised Code) Subsection 30.3.C.2 establishes procedure for determination of project area. The Code requires incorporation of the entire area for each assessors parcel number (APNs) for parcels less than 20 acres, as outlined in revised Code Subsection 30.3.C.2(a)(i) and a portion

of APNs or other lands larger than 20 acres based on factors outlined in Code Subsection 30.3.C(2)(a)(ii). These factors include:

- The area impacted by or the sphere of influence of the Project;
- The area to be actually used for the Project;
- Whether the Project is located in one or more hydrologically-related areas; and
- The extent of land coverage and land disturbance for the Project.

Revised Code Subsection 30.3.C.2(a)(iii) states that for a project on or comprising two or more contiguous parcels, the project area shall be the total combined square footage of the parcels, provided the parcels are permanently consolidated. If the parcels are not permanently consolidated, the owner shall record against the parcels a deed restriction or other covenant running with the land permanently assuring that the land coverage calculations for the parcels shall always be made as if the parcels had been legally consolidated. Considering the requirements above, the Conservancy, County and TRPA agree to define the project area as determined by the criteria listed below.

- Include the entirety of each APN that the main trail and neighborhood connections cross for Conservancy, NTPUD and NV Energy parcels smaller than 20 acres.
- For the one (1) Conservancy parcel over 20 acres in size in the western project area, the project area includes a 200-foot wide corridor following the main trail (i.e., 100-feet on each side of trail from the centerline).
- Where the shared-use trail enters public roadway ROWs, define the project area very narrowly to include only new trail facility features. For land coverage calculation, assume parcels are at or over allowed land coverage. Calculate coverage requirements separately for the ROW segment, assuming that required coverage is to be transferred. In this way, the project area is continuous, although this section of the project area does not contribute base allowable land coverage for calculation purposes.

2.6 PROJECT DESCRIPTION

The Project constructs a paved 10-foot wide and 2.2-mile long (11,825 linear feet) shared-use trail through lands commonly known as the Dollar and Firestone properties and extends the existing TCPUD multi-use trail, which currently ends near the intersection of Dollar Drive and SR 28, to the end of Fulton Crescent Drive. Figure 4 depicts the proposed shared-use trail alignment and illustrates the features found within the project area and immediate vicinity. Approximately 8,190 linear feet of shared-use trail lies within Conservancy-owned parcels, 2,455 linear feet within NTPUD parcels, 790 linear feet within a NV Energy parcel, 135 linear feet within Caltrans SR 28 ROW, and up to 255 linear feet within a private parcel near SR 28, as dependent on final boundary line survey results.

The Project transects portions of Assessor's Parcel Numbers (APNs) 092-010-021, 092-010-023, 092-010-033, 092-010-034, 092-010-035, 092-010-039, 092-010-040, 092-010-041, 092-010-042, 092-240-021, 093-010-037, 093-010-038, and 93-010-039. With one exception at the Dollar Creek crossing where the trail crosses a mapped SEZ, the shared-use trail is located on Class 4 and Class 6 land capability districts (LCD) that permit new outdoor recreational development. The Project, including the optional trailhead parking lot and access roadway, requires a total of 182,565 square feet of land coverage, of which approximately 16,875 square feet aligns over verified existing land coverage and 165,690 square feet is new land coverage. Where possible, the shared-use trail alignment follows existing unpaved trails and roads found within the project area. The amount of new land coverage within LCD 4 and 6 is well below the maximum land coverage allowed by TRPA codes and does not require land coverage relocation or transfer from offsite parcels. A minor quantity of on-site LCD 1b (SEZ) restoration will be performed as part of project implementation to offset new disturbance for the Dollar Creek bridge crossing.

Figure 4. Shared-Use Trail Alignment

The Project constructs a shared-use trail, defined by the TRPA as a linear public facility "transportation route". Two of the three Plan Areas bisected by the Project include "transportation route" as a permissible use. Plan Area 013 (Watson Creek) does not include "transportation route" in the list of permissible uses. As such, the Project proposes the amendment of TRPA and Placer County Plan Areas 013 to add "transportation route" to the list of permissible uses. The use will be added to a newly created Special Area 1 that follows the Project Area boundary within PAS 013 (please see Figure 21).

The Project includes the following facility features:

- A shared-use trail crossing of SR 28 just west of Dollar Drive that includes a raised median with seasonal pedestrian/bicyclist refuge island;
- 11,425 linear feet of 10-foot wide asphalt concrete trail constructed at grade (Figure 5);
- 200 linear feet of 10-foot wide asphalt concrete trail constructed on permeable fill/vented trail (Figure 6);
- 100 linear feet of Bridge Span across the Dollar Creek channel, stream environment zone (SEZ) and SEZ setback;
- 100 linear feet of 6-foot wide asphalt concrete neighborhood connector at the end of Fulton Crescent Drive;
- 2-foot wide clear zones that parallel each side of the asphalt concrete shared-use trail;
- Up to 13 transition aprons connecting the asphalt concrete shared-use trail to existing unpaved trails;
- Up to 13 culverts to convey surface runoff under the shared-use trail;
- Trail access controlled by boulders, user management fencing and/or removable bollards;
- Approximately 7,550 cubic yards of revegetated cut slopes and 1,725 cubic yards of fill slopes required to construct the asphalt concrete shared-use trail;
- Approximately 111,600 square feet of revegetated temporary disturbance associated with cut and fill slopes along the shared-use trail corridor, up to 1,100 linear feet of construction access roadway, 2 construction staging areas (one near SR 28 and one near end of Fulton Crescent Drive) and 7 hammerhead turnarounds (spaced throughout the trail corridor for use by construction equipment);
- Tree removal within paved trail areas and cut and fill slopes;
- Wayfinding, mileage markers and other optional signage; and
- Optional Project Component: A 19,914 square foot trailhead parking facility accessed from the SR 28 and Dollar Drive intersection accommodating up to 24 vehicular spaces.

Subsections 2.6.1 through 2.6.4 describe the individual components of the Project including trail alignment, facility features and construction controls, revegetation and restoration strategies, trail decommissioning and BMPs, and connectivity to existing trails, neighborhoods and other land uses.

2.6.1 Shared-Use Trail Alignment Description

The trail begins at the termination of the existing TCPUD multi-use trail near the intersection of Dollar Drive and SR 28. The Project starts with a crossing of SR 28 between the Dollar Drive and Fabian Way intersections (at a point just east of the 7-Eleven convenience store). Section 2.6.2.7 describes the SR 28 crossing in greater detail.

After crossing SR 28, the trail alignment crosses the Caltrans ROW to the northeast, passes behind a recently constructed bus shelter, and follows the NTPUD property line northerly along existing unpaved roadways and trails. Existing unpaved trails connect the proposed shared-use trail to the residential neighborhood located to the west. Near the end of Country Club Drive, the trail alignment heads northwest within Conservancy-owned lands along an existing unpaved roadway that parallels Dollar Creek to the south. The trail alignment turns north at a point where the existing unpaved road becomes too steep for a paved shared-use trail and crosses Dollar Creek (approximately 450 feet downstream of Dollar Reservoir) using an approximately 100-foot long bridge span.

North of the Dollar Creek trail crossing, the trail alignment follows contours in a northerly direction and uses several switch backs to climb a hillside to intersect an existing unpaved trail located to the west of Beverly Drive and the termination of Old County Road. This middle portion of the trail alignment crosses several existing unpaved trails that run in an east-west orientation, but does not follow existing trails because none currently exist. The remainder of the trail alignment (northerly portion) follows an existing unpaved trail with one exception where the shared-use trail veers to the west of the existing dirt trail to avoid a mapped SEZ. The northern terminus of the shared-use trail alignment follows an existing unpaved trail to the east (south of National Forest Lands) and then south parallel to a public roadway (Road 16N74) that provides seasonal access (June 1 to November 1) to National Forest Lands from the terminus of Fulton Crescent Drive. This portion of the trail is located on NV Energy lands located just west of the end of Fulton Crescent Drive.

2.6.2 Facility Features and Design

The Project incorporates the facility features and design presented below as determined by site-specific characteristics. Figures 5 through 15 illustrate design details for trail construction in different settings.

2.6.2.1 Design Objectives

The design objectives of the Project shared-use trail include:

- Meeting AASHTO guidelines;
- Meeting ADA standards;
- Maximizing use of existing land coverage and disturbance as consistent with environmental constraints;
- Enhancing public access to recreational facilities and non-motorized transportation alternatives;
- Considering non-motorized winter uses of the project area;
- Meeting the goals of adopted Regional Plans and Burton Creek State Park Master Plan;
- Minimizing conflicts between bicycles, pedestrians, and automobiles; and
- Minimizing environmental disturbance, especially in SEZs.

2.6.2.2 Shared-Use Trail Grades and Slopes Criteria and Standards

The following facility features and construction controls serve to meet AASHTO guidelines and ADA standards:

- Minimum 10-foot wide asphalt concrete path (Note: Although ASSHTO provides for a range of trail widths, the Project proposes a 10-foot wide paved path in most locations to reduce land coverage associated with the project area and to provide a path that fits better with the non-urban project setting. Predicted use in the proposed segments, including the diversity of user groups and the total volume of use, preclude narrowing the trail width beyond the minimum standard of 10-feet.);
- 2-foot wide clear zone or shoulder on each side of the asphalt concrete path with maximum side slopes of 5%;
- Clear zones are maintained free of trees, poles, walls, fences, guardrails, and other lateral and vertical obstructions, which may be vegetated with ground cover and low lying shrubs;
- Minimum 5-foot separation from the edge of path to canals, ditches, or slopes steeper than 1:3 or 33%;
- Grades kept to a minimum and include:
    - Generally less than 5% to keep the trail useable for a wide variety of cyclists;
    - Where grade must exceed 8.33%, resting areas such as pull-offs or a wider path are incorporated; and
    - Where grade must exceed 5%, the maximum running length for the specified grade distance meets ASSHTO guidelines.

2.6.2.3 Shared-Use Trail Surface Proposals

The primary shared-use trail surface includes an asphalt concrete trail on grade that is 10-foot wide with 2-foot wide clear zones on each side of the asphalt concrete path, as depicted in Figure 5. Trail design in wet areas correspond to site-specific conditions, as described and illustrated below.

<u>Design Option 2 (Raised Asphalt Trail on Permeable Base Material/Vented Trail).</u> Design Option 2 includes asphalt concrete pavement with permeable base where subsurface hydrologic conditions produce long periods of dry surface soils but where surface drainage could be affected by the trail alignment during wet conditions (Figure 6). This design option maintains the trail standards necessary to encourage the widest range of user groups, while avoiding or greatly minimizing impacts to sensitive soil areas with the use of permeable base material that allows for continuation of existing drainage patterns.

Figure 5. 10-Foot Wide Asphalt Concrete Trail on Grade

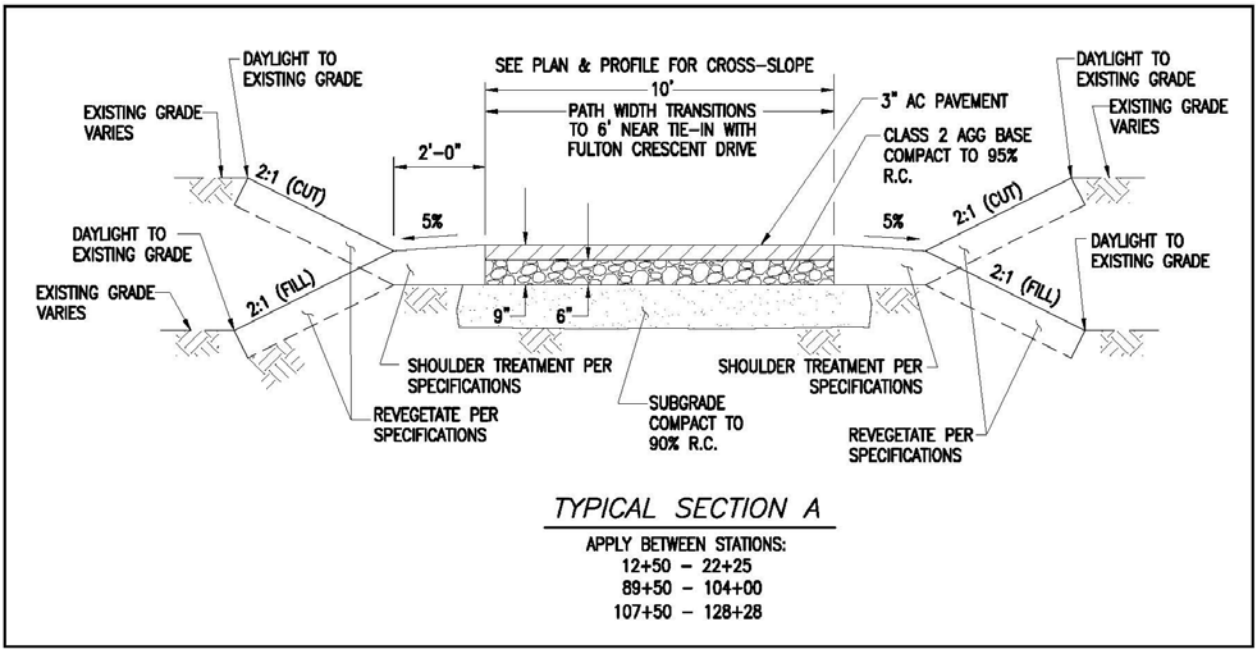

Figure 6. 10-Foot Wide Asphalt Concrete Trail on Permeable Fill/Vented Trail

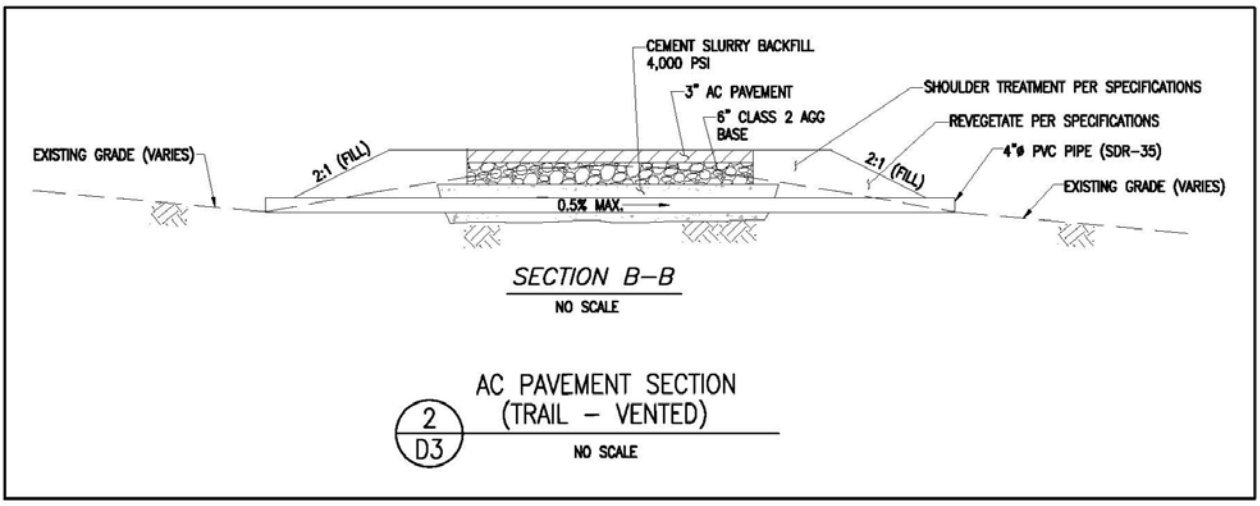

2.6.2.4 Neighborhood Connections

Neighborhood connections comply with the development standards listed below:

- Utilize existing, well-defined, user created access points (e.g., unpaved trails connecting to Polaris Road, Country Club Drive and Old County Road).
- Neighborhood connections provide easy trail access for nearby residents.
- Access to neighborhoods can be unpaved, utilizing existing user created trails. Necessary BMP upgrades may occur on unpaved trails used for neighborhood connection to reduce impacts on natural resources.

2.6.2.5 Stream Environment Zones and Creek Crossings

Project construction generally avoids direct impacts to SEZ and adheres to the following list of construction techniques and facility features in the vicinity of SEZs as determined by site-specific conditions (see above for detailed description).

- Minimize length of trail in designated SEZ.
- Maximize use of existing land coverage or disturbance.
- Use raised asphalt concrete trail on permeable fill/vented trail in areas that exhibit SEZ vegetation types but not near surface groundwater conditions (See Design Option 2 – Figure 6).
- Install a 14-foot wide bridge with safety rail at the Dollar Creek crossing, a few hundred feet downstream from Dollar Reservoir where the creek channel and SEZ narrows. Figure 7 illustrates the general features of bridge design. Engineering design of this bridge during construction plan preparation will consider: 1) establishing maximum deck elevation and setting support locations to avoid impeding flood flows; 2) bridge support design to minimize SEZ and wetland disturbance; and 3) ADA requirements. A bridge span of approximately 100 feet supported by pier or piling footing design is expected to meet this criteria. At either end of the bridge, the trail transitions to asphalt concrete trail that begins outside of the delineated SEZ and SEZ setback.

Figure 7. Dollar Creek Bridge Span

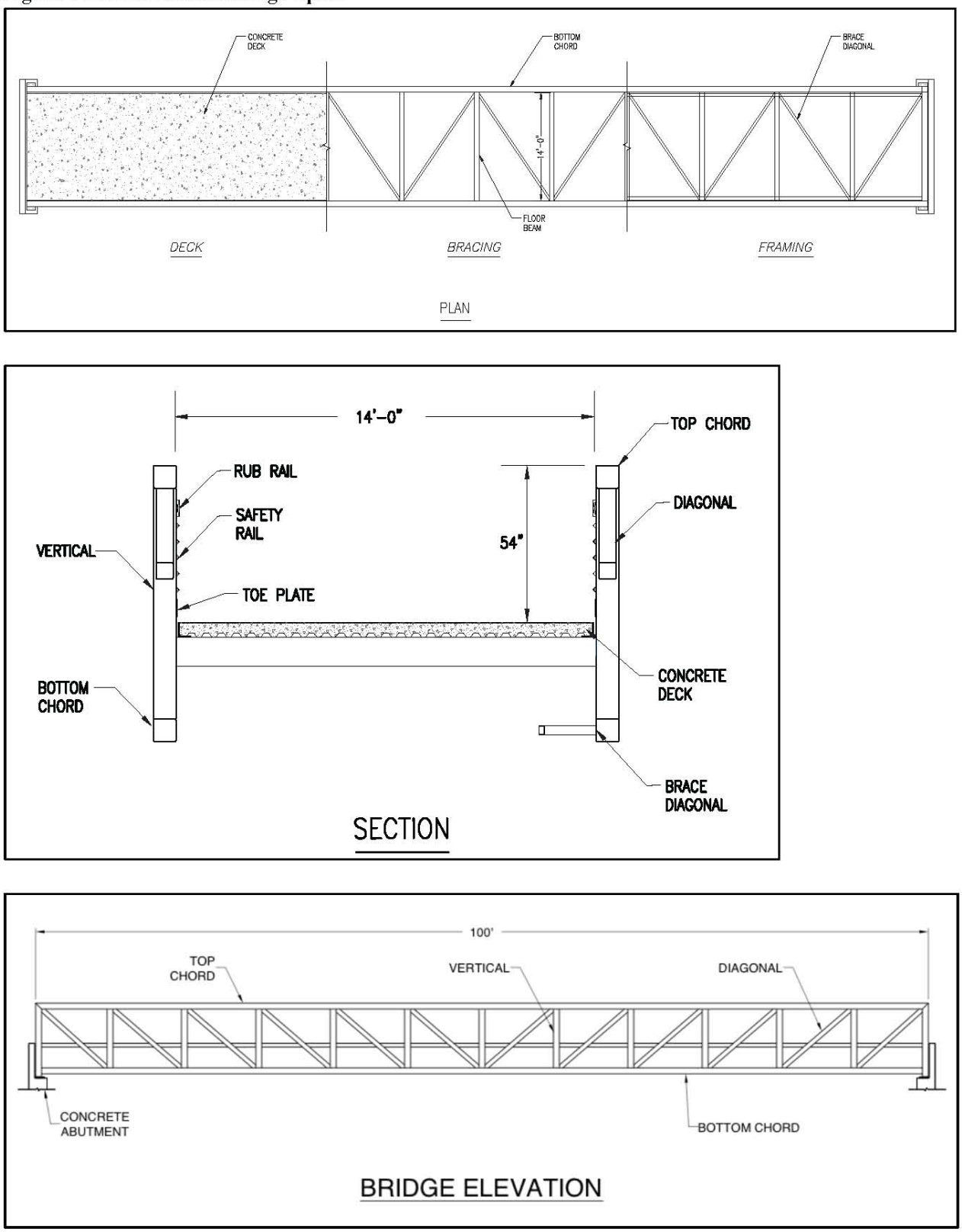

Source: NCE 2012

2.6.2.6 Hillside Construction

The construction techniques listed below apply to portions of the trail built on hillsides:

- Focus on fitting the trail to the natural slope alignment;
- Traverse hillsides in order to minimize steep trail grades;
- Minimize cut and fill slopes as much as possible in order to reduce construction impacts and visual scarring;
- Utilize natural revegetation specifications for fill and cut slopes where possible (see sheet D4 in Appendix C); and
- Install retaining walls or other armoring in key areas to reduce the size of cut and fill slopes.

2.6.2.7 SR 28 Crossing

The Project employs the following techniques for the SR 28 crossing:

- Locate the marked crossing of SR 28 west of established intersection of Dollar Drive and SR 28 at mid-block location to minimize vehicle and pedestrian/bike conflicts (see Figure 8). Conclusions from the Traffic Gap Study (Appendix A) indicate that simply striping a crosswalk at the SR 28 and Dollar Drive intersection would not provide adequate crossing conditions for bicyclists and pedestrians;

- Provide a pedestrian refuge using flexible delineators in accordance with the *California Manual on Uniform Traffic Control Devices* (MUTCD) arranged in an isosceles triangle pattern on either side of the crosswalk;

- Use supplemental advanced warning signs, yield pavement markings with “Yield here to pedestrians” signage and location warning signs;

- Place advanced warning signs approximately 300 feet in advance of the crosswalk in each direction, in accordance with the *California MUTCD*; and

- Place supplemental push-button activated Rectangular Rapid Flashing Beacons located in conjunction with the crosswalk location signs (the push-buttons will include appropriate signage instructing users of their operation functions).

Installation of the raised median crossing described above allows for a two-stage crossing with trail users needing to observe gaps in one stream of traffic at a time. Eight seconds would be required to cross each travel lane. Southbound trail users would be able to see gaps up to 9.5 seconds, while northbound users would be able to see gaps up to 8.7 seconds. Adequate site distances are provided to enable trail users to judge adequate gaps at this location. The final crosswalk designs will meet ADA access and audible/tactile standards as appropriate.

Figure 8. SR 28 Crossing

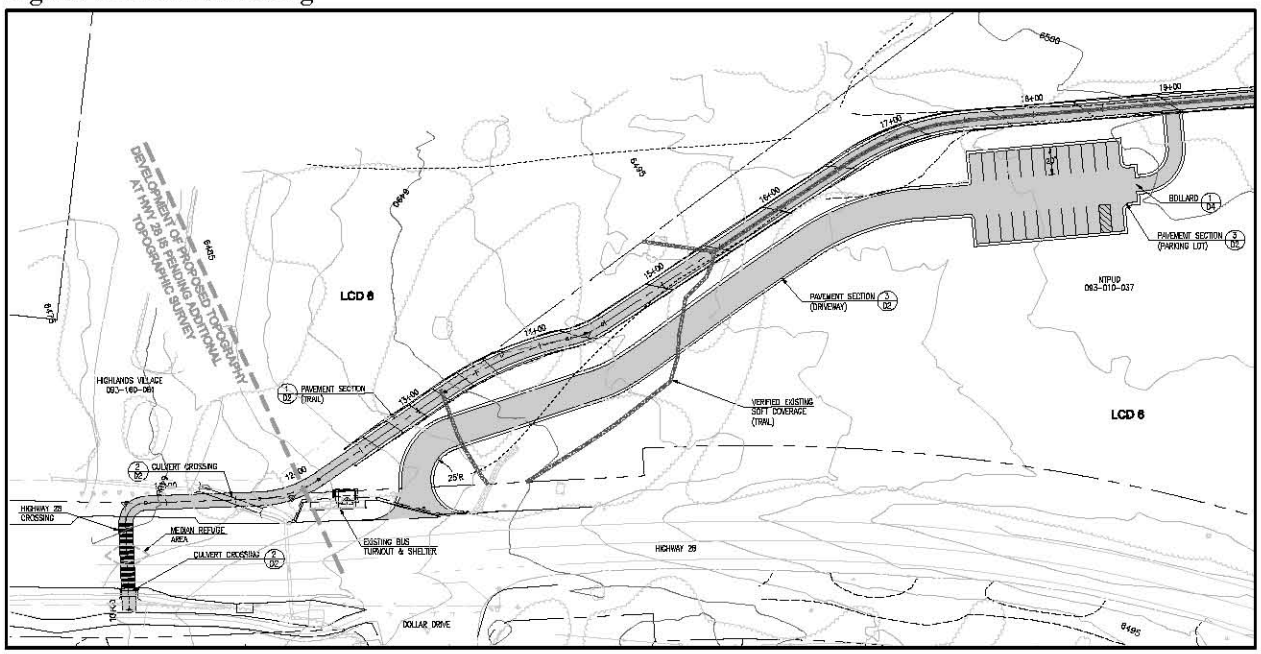

Source: NCE 2012

2.6.2.8 Signage

The Project relies on education and interpretation as a first means of resource protection and public safety. Directional or wayfinding signage to specifically designated access areas decreases the pressure to develop new informal unpaved trails. Interpretive signage improves compliance with these directions and enhances the sense of stewardship of trail users. Mileage markers provide a sense of distance and trail map location. The County recognizes the abilities of strategic sign placement to direct most users as well as the limitations of this approach in high use or particularly sensitive areas. Final design plans will include signage details such as size, color, placement, and text.

Shared-use trails like the Project require the proper use of signage and striping to meet applicable design standards (e.g., AASHTO). Striping the center of the trail alignment will separate direction of travel and reduce user conflicts. Signage planned for the Project shall include:

- Signage for public safety and crosswalk identification, including notice about trail grade changes and approaching roadway crossings; and
- Mileage markers or other wayfinding signage along the shared-use trail to provide users with information necessary to direct emergency response personnel in the event of an emergency.

Additional signage for the Project may include:

- Limited signage for interpretive opportunities, including natural communities, historical sites of interest, and cultural landscapes;
- Signage for restoration and revegetation areas, including both interpretive and regulatory;
- Signage for appropriate trail use and the need to stay on designated paths, including stewardship, Safe Speeds and Yield to Wheels (to reduce user conflicts); and

- Recommended use signs at neighborhood access points if necessary to reduce neighborhood conflicts.

Project signage shall conform to the TRPA Code as well as the TRPA Design Review Guidelines (i.e., Appendix E of the TRPA Guidelines), which provide guidance for signage content, sizing, and placement. As stated in the Guidelines, metal signs are acceptable if sized, located, and painted appropriately to blend into the surrounding environment. In addition, the Placer County Design Review Committee (DRC) will review the final signage design to ensure compliance with County wayfinding and other criteria.

2.6.2.9 Physical Barriers, Screening and Emergency Access Control

The project installs physical barriers in sensitive areas (e.g., SEZs, creek crossing) and areas adjacent to roadways that may involve:

- Log fencing;
- Vegetative screening
- Boulders;
- Removable bollards; and
- User management gates.

There is an existing USFS user management gate (a gate that can be locked to prohibit seasonal motorized access to an area during the winter and spring for erosion and sediment control) for road number 16N74 at the end of Fulton Crescent Drive that will remain. The Project proposes boulders to separate the shared-use trail from the USFS road near the trail's connection to Fulton Crescent Drive, as illustrated on Sheet C12 in Appendix C. Log fencing, as shown in Figure 9, is also an option, should acceptable boulder materials be unavailable.

Emergency access to the shared-use trail from SR 28 is provided through the trailhead access road and parking area. The Project installs removable bollards in the middle of the trail at locations for emergency vehicle access. Figure 10 illustrates a Placer County detail for removable bollards.

Figure 9. Example of Log Fencing

Figure 10. Detail of Removable Bollards

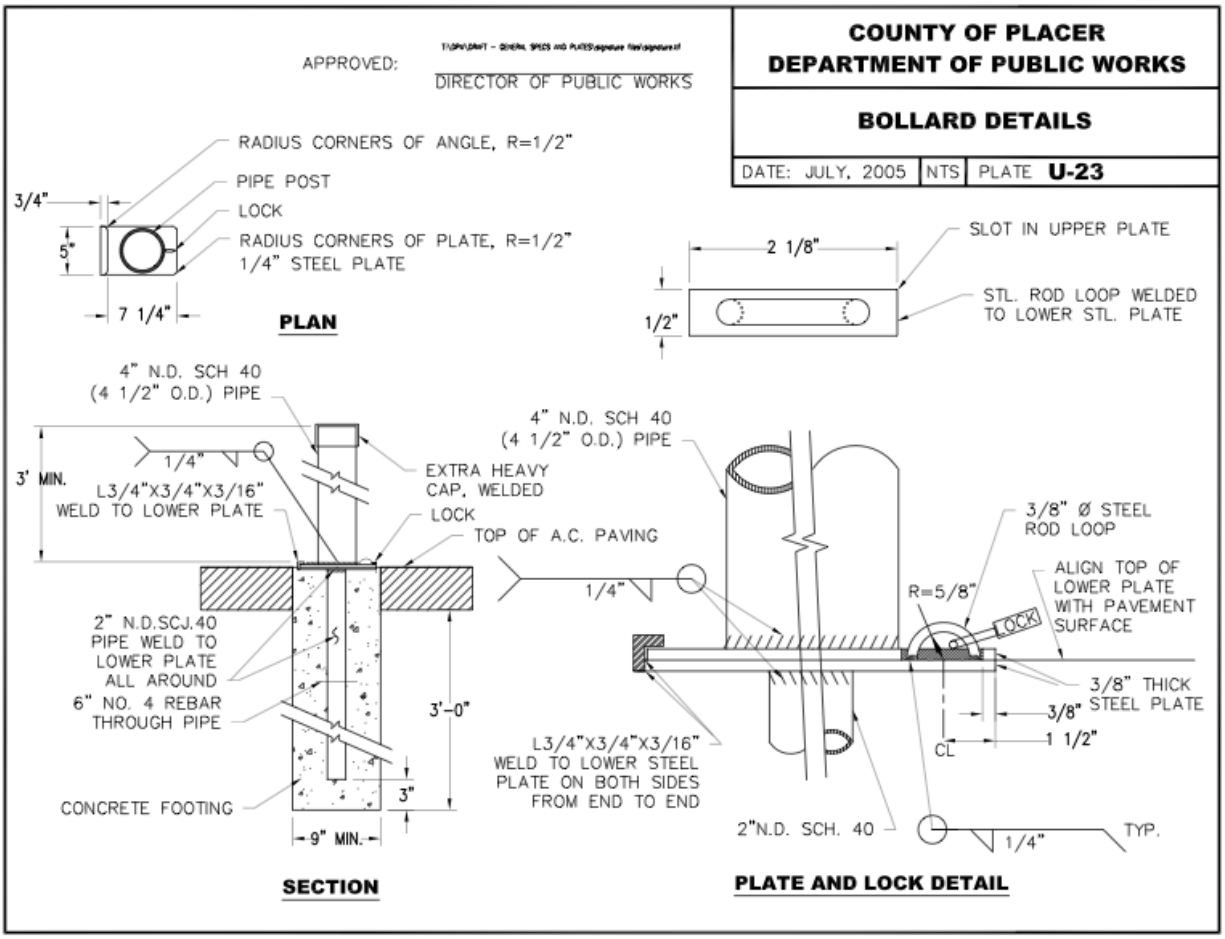

2.6.2.10 Staging and Access Areas

Plan sheets C13, C14, C15 and C16 in Appendix C illustrate proposed locations for temporary staging and construction access. Criteria for final determination of staging areas are: 1) high capability land; 2) areas with existing disturbance with preference towards existing paved areas for access; 3) ability to access on higher traffic volume streets, using neighborhood streets only if no other location is possible; 4) protected by site-specific BMPs for erosion and sediment control and fugitive dust; and 5) close enough to construction site to allow for efficient use. Figure 11 illustrates standard construction entrance and access stabilization measures. Conservancy, NTPUD and NV Energy owned land within the project area meet the criteria established above and provide necessary access for construction.

In addition to site access and staging plans, the Project provides other necessary construction management requirements for the National Pollutant Discharge Elimination System (NPDES) construction permitting and TRPA and County project approvals. These measures include dust control, properly located and protected stockpiles, erosion and sediment control structures, and disturbed site restoration.

Work zones will be established to limit and contain construction disturbance outside of and at appropriate distance from SEZ and wetland areas. Criteria for identification of these work zones includes: 1) construction methodology that uses the smallest equipment possible and access from both sides of the SEZ areas to reduce access area needed; and 2) limiting disturbance to the minimum necessary to allow two pieces of construction equipment to pass.

Figure 11. Construction Entrance/Access Stabilization

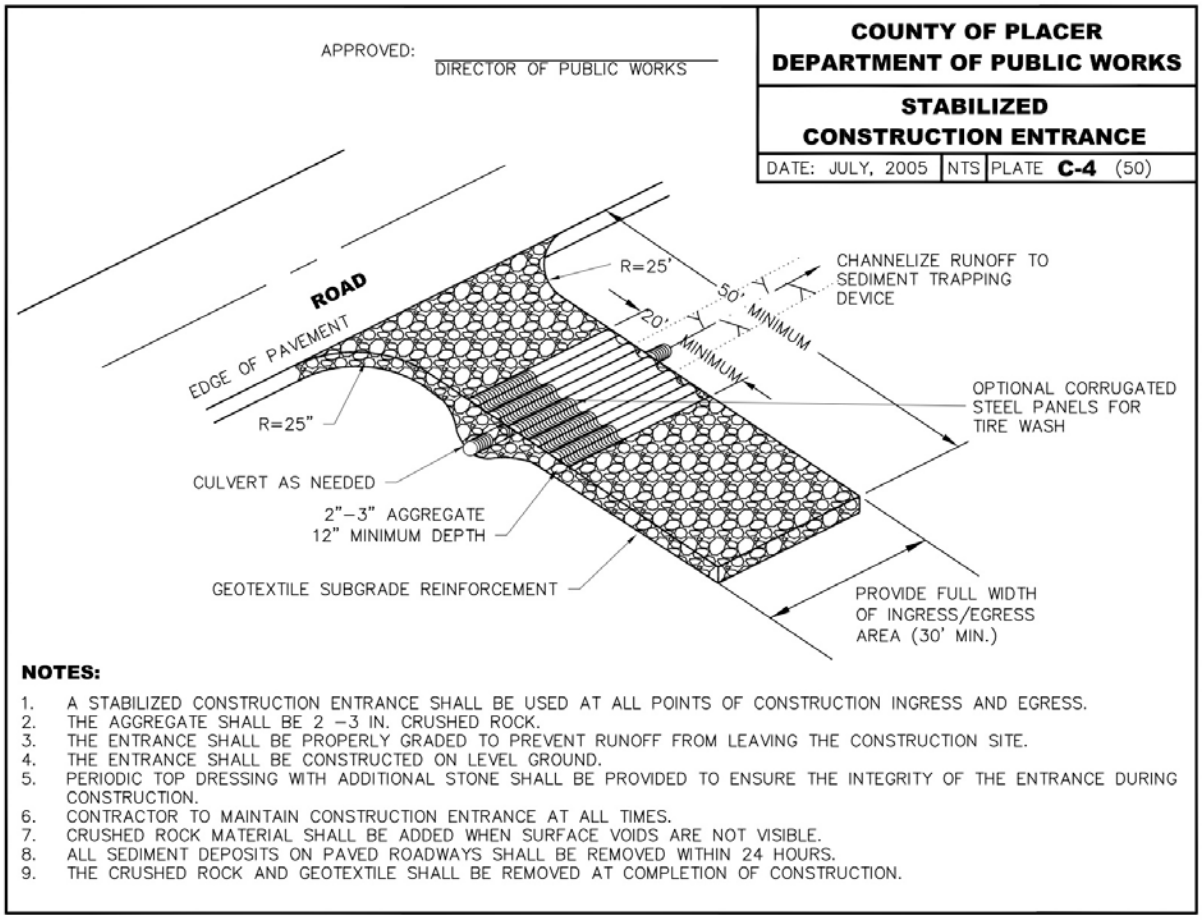

NOTES:

1. A STABILIZED CONSTRUCTION ENTRANCE SHALL BE USED AT ALL POINTS OF CONSTRUCTION INGRESS AND EGRESS.
2. THE AGGREGATE SHALL BE 2 –3 IN. CRUSHED ROCK.
3. THE ENTRANCE SHALL BE PROPERLY GRADED TO PREVENT RUNOFF FROM LEAVING THE CONSTRUCTION SITE.
4. THE ENTRANCE SHALL BE CONSTRUCTED ON LEVEL GROUND.
5. PERIODIC TOP DRESSING WITH ADDITIONAL STONE SHALL BE PROVIDED TO ENSURE THE INTEGRITY OF THE ENTRANCE DURING CONSTRUCTION.
6. CONTRACTOR TO MAINTAIN CONSTRUCTION ENTRANCE AT ALL TIMES.
7. CRUSHED ROCK MATERIAL SHALL BE ADDED WHEN SURFACE VOIDS ARE NOT VISIBLE.
8. ALL SEDIMENT DEPOSITS ON PAVED ROADWAYS SHALL BE REMOVED WITHIN 24 HOURS.
9. THE CRUSHED ROCK AND GEOTEXTILE SHALL BE REMOVED AT COMPLETION OF CONSTRUCTION.

2.6.2.11 Optional Trailhead Parking Area

Parking demand at points along the Project alignment is estimated based on the calculated demand for drive-to-trail users, as well as consideration as to how existing recreationalists and commuters may react to the new trail, as detailed in Appendix D. To accommodate anticipated parking demand the Project proposal includes an optional trailhead parking area component near the trail's intersection with SR 28, as illustrated on Plan Sheet C2 in Appendix C. The trailhead parking area would provide up to 24 spaces in an existing forest clearing accessed by a new access roadway that would intersect with SR 28 at the existing Dollar Drive intersection. Figure 8 shows the location of the access roadway and trailhead parking area.

2.6.3 Revegetation and Restoration, Trail Decommissioning and Permanent Best Management Practices

The Project description includes restoration strategies that address a number of different needs. Compliance with the TRPA Code and other standard permit conditions includes restoration of soil disturbed during construction and offsetting restoration for permanent disturbance and land coverage in low capability lands. Additionally, the Project proposes to consolidate some existing unpaved trail uses and apply BMPs to portions of the unpaved trails that are retained.

The Project identifies three types of revegetation and restoration treatment and soil protection strategies: Reveg Type A, Reveg Type B and Reveg Type C. There are three strategies to address differences in the slope of disturbed areas and whether they are located in or near SEZs. Appendix E provides the details of the Restoration and Revegetation Plans (RRPs) for disturbed areas, trail retrofitting or decommissioning, and for temporary and permanent erosion control. Revegetation and restoration goals are to establish or reestablish a naturally functioning and self-sustaining landscape. Ground and vegetation disturbance is limited to the trail corridor (including cut and fill boundaries) within the project area boundaries defined on the plan sheets attached in Appendix C.

Approved professionals monitor the revegetation and restoration activities. These professionals represent the County, act as revegetation/restoration specialists, and verify that the treatments are conducted in a satisfactory manner. Post-construction conditions require a multi-year warranty period to ensure success.

2.6.3.1 Revegetation and Restoration of Land Coverage

TRPA verified the existing legal land coverage for the project area based on the land capability and land coverage report submitted to TRPA in January 2012 (Appendix J). When verified existing land coverage is removed and restored within the defined project area, land coverage can be relocated as land coverage on comparable or higher capability lands. Land coverage removed and restored from SEZs (LCD 1b), is considered part of the restoration mitigation requirement (at 1.5:1 ratio for low capability lands). If the Conservancy or NTPUD do not own the parcel, the property owner (e.g., NV Energy) must agree to permanent restoration of the verified land coverage to allow mitigation credit or the land coverage must be transferred with the easement agreement.

Although minimized, the Project must encroach into delineated SEZ and wetlands in some locations to maintain the integrity of a linear public facility. The project team established trail alignments to avoid these sensitive areas to the extent possible, reduced disturbance through facility details (e.g., permeable fill and boardwalk construction), and propose to fully mitigate impacts when necessary. Adopted water quality plans from TRPA and Lahontan establish mandatory requirements for disturbance in SEZ. Lahontan and the USACE regulate activities in wetland areas. The Project creates no permanent disturbance of SEZ or wetlands, but does include a bridge span of Dollar Creek that under TRPA revised Code Chapter 30 equates to land coverage in LCD 1b.

2.6.3.2 Permanent Best Management Practices

TRPA revised Code Chapter 60 establishes requirements for installation of permanent BMPs. The Project incorporates provisions related to drainage conveyances, water quality treatment, cut/fill slopes, and revegetation. The Project proposes to infiltrate storm runoff from trail surfaces in adjacent clear zone areas. Where the trail lies in close proximity to existing roadways, capture and conveyance to infiltration areas may be necessary and will be defined during final engineering design.

To avoid or minimize potential effects to surface drainage patterns, the Project installs up to 13 culverts (Figure 12) at key drainages to by pass potential surface flows. In certain areas, concentrated side trail drainage requires swales as depicted in Figure 14.

The Project installs up to 12 transitional aprons, as illustrated in Figure 13, at connections with existing unpaved trails to facilitate access onto and off of the shared-use trail and avoid tracking of sand and gravel onto the paved trail (thus creating a safety concern).

To avoid or minimize vegetation removal or damage from user created access points, the Project includes physical barriers and screening such as boulders, vegetative screening, log fences or management gates as detailed in Subsection 2.6.2.9 above.

To limit erosion from existing unpaved trails that remain, Figure 15 includes a schematic of permanent BMP application that may be employed along certain trail junctions.

Other subsections of this chapter describe permanent BMPs as related to vegetation protection, disturbed site revegetation, and on-site restoration to avoid or minimize potential effects to surface water quality.

Figure 12. Culvert Crossing

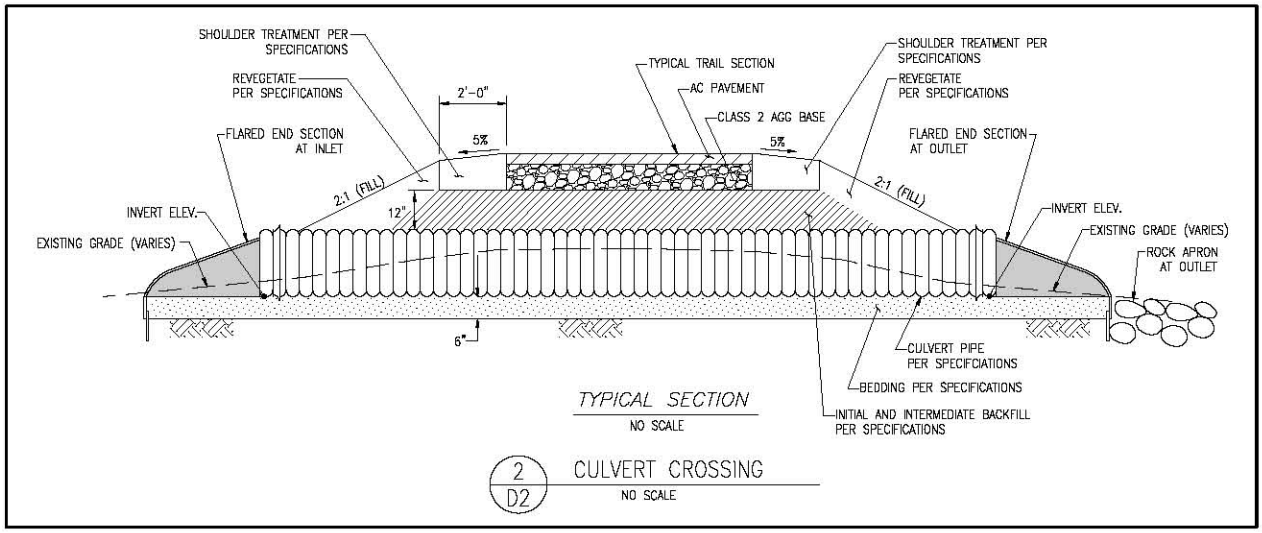

Source: NCE 2012

Figure 13. Transitional Apron

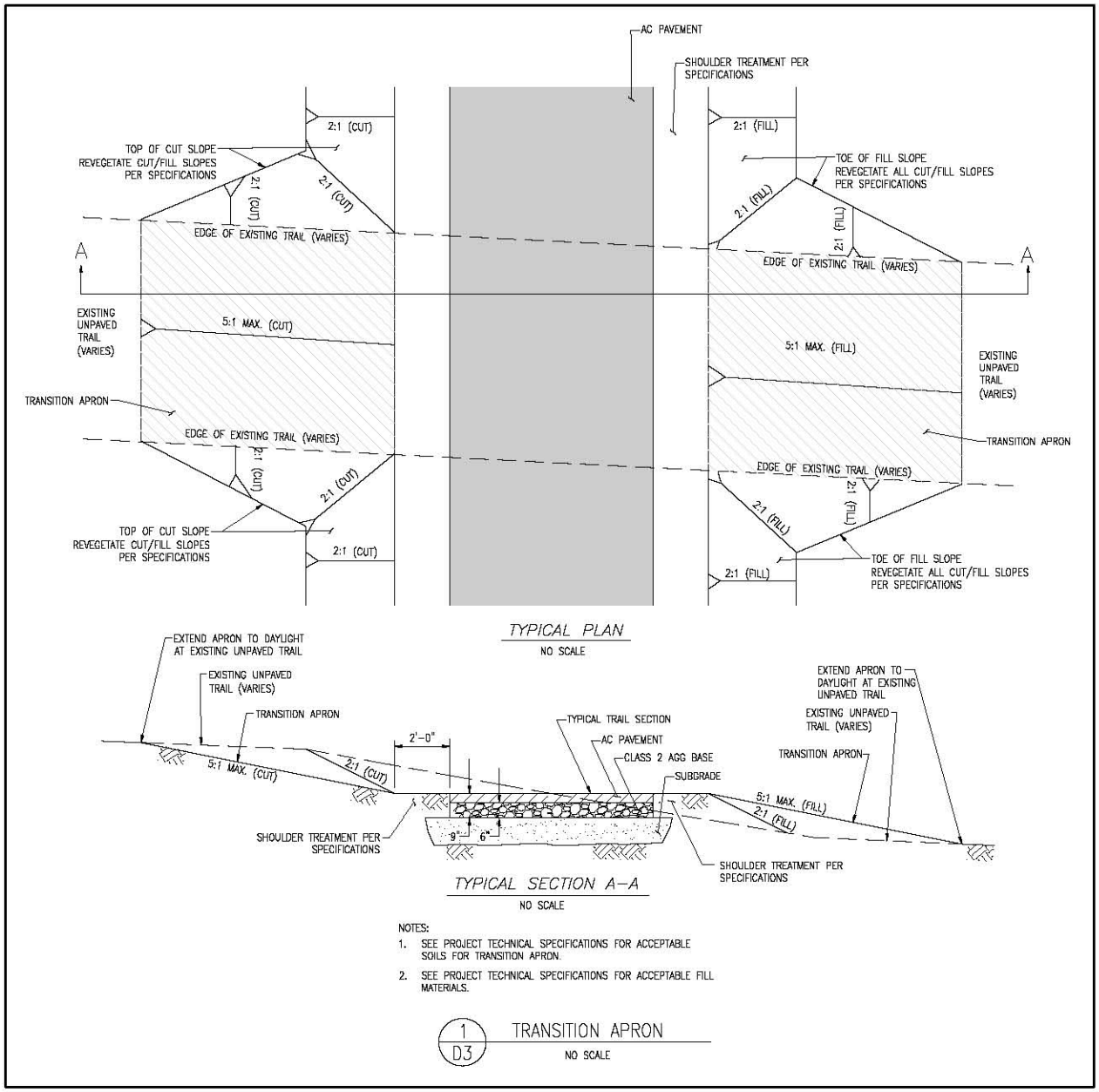

Source: NCE 2012

Figure 14. Typical Swale Detail

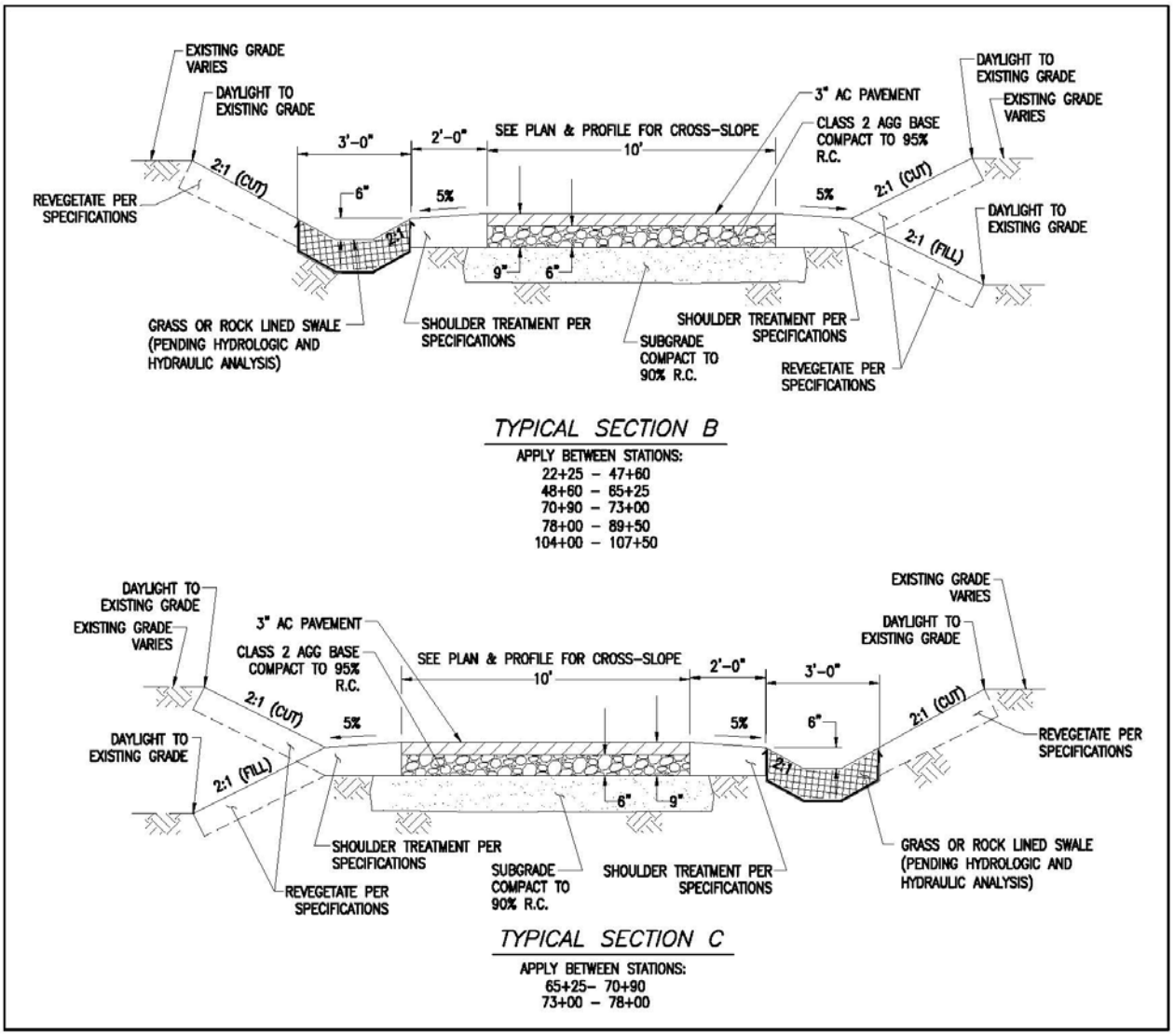

Source: NCE 2012

Figure 15. Example of Trail BMP Retrofit

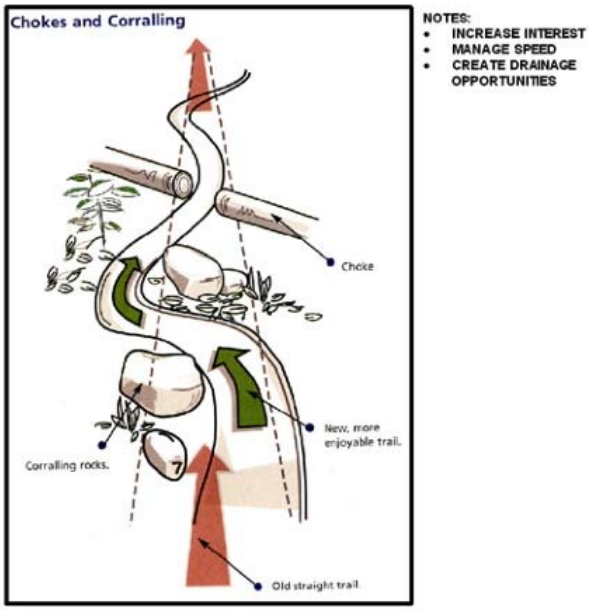

2.6.4 Connectivity to Existing Trails, Neighborhoods and Other Access Points

The Project provides the central north-south trail link in the North Shore community as identified in the Lake Tahoe Regional BPMP (TMPO 2010) and connects residential neighborhoods to existing trails, commercial areas, schools, public parks and other access areas. Table 2 identifies the name and type of connections that occur with the shared-use trail. The Project extends an existing TCPUD multi-use trail to recreational users and commuters that live in the Country Club and Cedar Flats neighborhoods. The extension provides an improved shared-use trail connection to the larger Tahoe City bicycle trail network located west of the project area. The 7-Eleven Commercial Center and the transit stop are located at the shared-use trail crossing of SR 28.

Table 2

Dollar Creek Shared-Use Trail Connectivity

Connection Name	Connection Type
TCPUD Multi-Use Trail System	Via TCPUD Multi-Use Trail
Existing Unpaved Trails on Public Land Illustrated on Plan Sheets C2 to C12 (Appendix C)	Adjacent Use
Country Club and Cedar Flats Residential Neighborhoods	Via Existing Unpaved Trails
North Tahoe High School	Via Existing Unpaved Trails
7-Eleven Commercial Center	Via TCPUD Multi-Use Trail
Burton Creek State Park	Via Existing Unpaved Trails and Roads
SR 28 and Dollar Drive Transit Stop	Adjacent Use

Source: HBA 2012

2.7 PROJECT IMPLEMENTATION

Based on future funding availability, the Placer County Department of Public Works proposes to implement the Project in the 2013-2015 construction seasons to assist with meeting the goals of TRPA's Lake Tahoe Region BPMP (TMPO 2010). The County's contractor will conduct grading, clearing, and excavation work during the TRPA grading season between May 1 and October 15 unless a grading extension is granted.

Prior to construction, the contractor secures storage, access, and staging areas as approved by the County and TRPA. No staging or storage occurs in wetland areas or SEZs. The contractor is responsible for maintenance of mobilization sites, including placement and maintenance of temporary erosion and sediment control BMPs. Equipment, vehicles, and materials are stored on paved or disturbed surfaces only, in locations approved by the County and TRPA. The contractor limits the areas to be disturbed to the minimum size required to construct proposed improvements. Disturbed areas have temporary BMPs in place before and during construction and are restored to preconstruction conditions following completion of construction activities. Temporary BMPs include, but are not limited to, fiber rolls, gravel bags, silt fencing, tree protection fencing, construction limit fencing, and gravel construction access.

Construction materials used for the Project include, but are not limited to, backfill material, drain rock, aggregate base, asphalt, concrete, reclaimed asphalt pavement (RAP), geoblocks, filter fabric, erosion control blankets, rip rap, vegetation, sediment traps with grates, manholes, transverse drains, concrete culverts, corrugated metal pipe culverts, pipe, and erosion control blocks.

General construction equipment used for the Project include, but are not limited to, backhoes, mini excavators, wheeled loaders, vibratory plate compactors, roller compactors, forklifts or loaders with fork attachments, asphalt pavers, saw cutting equipment, hand tools, hauling trucks, street sweepers, water trucks, curb and gutter forming machines, concrete trucks, and delivery trucks. In SEZs, equipment will be limited to wheeled loaders, backhoes, hand equipment, or other similar low impact equipment.

2.8 OPERATIONS, MANAGEMENT AND MAINTENANCE STRATEGY

The Project includes facility features and construction controls to minimize management and maintenance requirements including: adequate construction standards to accommodate service vehicles, designated access points, and user control features such as signage, railings, or rock/wood/vegetative barriers as appropriate in sensitive areas. The Operations, Management and Maintenance Strategy (OMMS), attached in Appendix F, establishes guidance for the Project. As project planners complete environmental study and final design details, and as use of the completed trail or trail segments dictate, additional requirements may arise and will be addressed. The long-term Operator of the shared-use trail will be determined prior to project construction.

The following management and maintenance objectives state clearly the designated Operator's intent for long-term project support.

a. Manage trail use to provide broad non-motorized access to users of all age groups and abilities.
b. Comply with ADA provisions for access for persons with disabilities.
c. Manage trail use to protect natural and cultural resources.
d. Manage trail use to create a neighborhood asset.
e. Use the least restrictive means available to effectively manage trail use, increasing degree of restrictions only in response to actual conditions.
f. Maintain trail facilities adequately to insure a safe experience for all user groups.
g. Maintain trail facilities adequately to protect the public investment in construction costs.

The Project brings new users to the project area and proposes new facilities that require periodic maintenance. The Operator retains the responsibility to ensure public access consistent with project goals and to maintain trail features for safety and to protect the investment of public funds used in their construction. Appendix F further describes strategies to provide management and maintenance, acknowledging the appropriate combination will change over time to reflect need and changing circumstances.