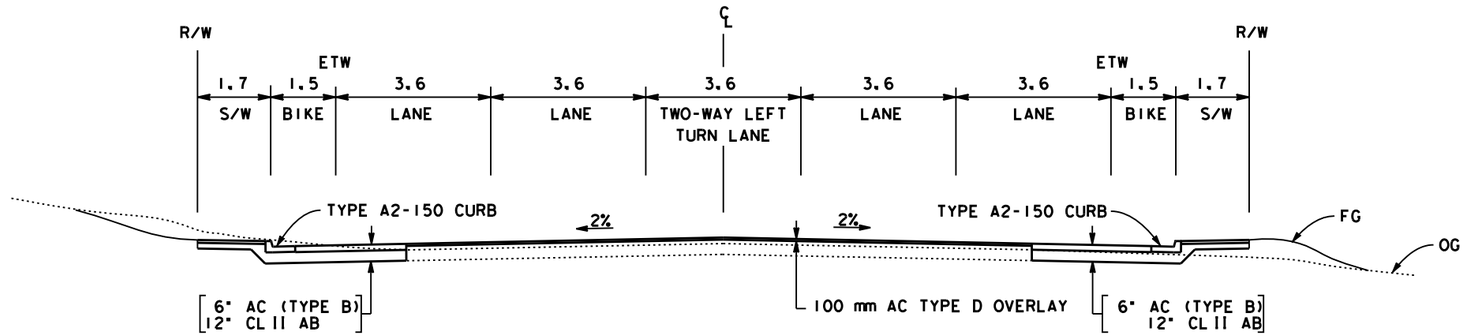

ALT 4 - SR 28
SR 267 TO SECLINE

STA 146+87 TO 148+75

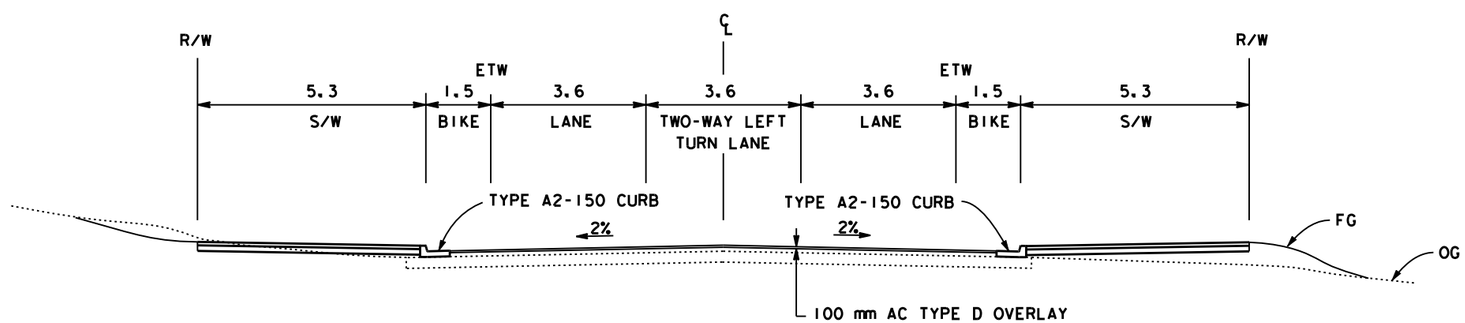

ALT 4 - SR 28
SECLINE TO CHIPMUNK

STA 148+75 TO 162+45

Source: Dokken Engineering

Figure 2-1
Kings Beach Commercial Core Improvement Project Alternatives

PLAN SCALE: NO SCALE
PROFILE SCALE:
HORIZ: NA
VERT: NA

DATE:
DESIGNED:
DRAWN: REL
CHECKED: BRS 12/01/06
RECORD DRAWING:

CONTRACT NO.

COUNTY OF PLACER
DEPARTMENT OF PUBLIC WORKS
KINGS BEACH COMMERCIAL CORE IMPROVEMENT PROJECT
FEASIBILITY STUDY - ALTERNATIVE 4 - TYPICAL SECTIONS

SHEET NO. 18 OF 18

NO SCALE | PLA-28-KP 14.8/16.5 (PM 9.2/10.3) | EA 0C9300