VICINITY MAP
NTS

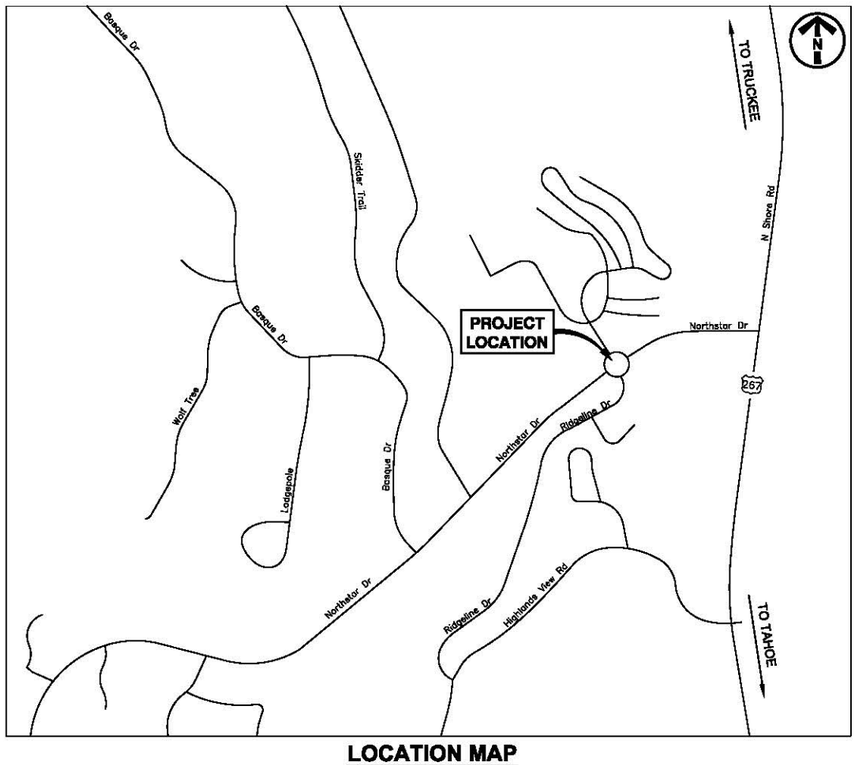

LOCATION MAP
NTS

NORTHSTAR ROUNDABOUT MODIFICATION PROJECT

PLACER COUNTY, CALIFORNIA
CONTRACT NO. 1158

INDEX OF DRAWINGS

SHEET NO.	DRAWING NO.	TITLE
1	COV	PROJECT TITLE, VICINITY MAP, LOCATION MAP AND SHEET INDEX
2	L1	LAYOUT PLAN
3	ESP1	EROSION CONTROL AND SITE PREPARATION PLAN
4	RS1	TYPICAL ROUNDABOUT SECTIONS
5	G1	GRADING PLAN
6–7	P1–P2	PAVING PLAN
8	MD1	MISCELLANEOUS DETAILS
9	U1	UTILITY PLAN
10	DP1	DRAINAGE PROFILES AND DETAILS
11–12	CS1–CS2	CHANNELIZATION AND SIGNING PLAN
13	CSD1	CHANNELIZATION AND SIGNING DETAILS

GENERAL NOTES:

1. THE CONTRACTOR SHALL POSSESS A VALID CALIFORNIA CLASS A "CONTRACTORS" LICENSE, OR A COMBINATION OF THE FOLLOWING CLASSES, C–8 CONCRETE, C–12 EARTHWORK AND PAVING, C–13 FENCING, C–31 CONSTRUCTION ZONE TRAFFIC CONTROL CONTRACTOR, C–32 PARKING AND HIGHWAY IMPROVEMENT, C–34 PIPELINE, C–50 REINFORCING STEEL, D–42 SIGN INSTALLATION, D–49 TREE SERVICE, D–56 TRENCHING, D–59 HYDROSEED SPRAYING, AND D–63 CONSTRUCTION CLEAN UP, AT THE TIME OF THE BID AWARD, AND THE LICENSE SHALL REMAIN IN EFFECT THROUGHOUT THE TERM OF THIS CONTRACT.
2. THE COUNTY OF PLACER HAS MADE EVERY EFFORT TO SHOW LOCATIONS OF ANY AND ALL EXISTING SURFACE AND SUBSURFACE STRUCTURES. HOWEVER, ACTUAL FIELD CONDITIONS AND LOCATIONS CAN VARY CONSIDERABLY FROM PLAN LOCATIONS. THEREFORE, PLACER COUNTY CANNOT, AND DOES NOT, ASSUME RESPONSIBILITY OF THE EXISTENCE OR LOCATION OF ANY STRUCTURE SUCH AS, BUT NOT LIMITED TO, UTILITIES, PIPELINES, AND SEWERS. THE CONTRACTOR IS RESPONSIBLE FOR CONTACTING ALL AGENCIES AND/OR OWNERS TO VERIFY THIS INFORMATION PRIOR TO AND DURING CONSTRUCTION OF IMPROVEMENTS SHOWN HEREON, AND TO CONTACT THE ENGINEER IN THE EVENT OF ANY SIGNIFICANT DISCREPANCY.
3. THE CONTRACTOR IS RESPONSIBLE FOR DETERMINING THE LOCATION OF, AND PROTECTING, ALL EXISTING UTILITIES AND REPAIRING DAMAGE TO EXISTING UTILITIES.
4. THE CONSTRUCTION METHODS AND MATERIALS SHALL CONFORM TO THE MAY 2006 EDITION OF THE STATE OF CALIFORNIA DOT STANDARD SPECIFICATIONS AND STANDARD PLANS, SPECIAL PROVISIONS, AND APPLICABLE STANDARD DRAWINGS OF THE PLACER COUNTY GENERAL SPECIFICATIONS. IN CASE OF CONFLICT, REFER TO THE PROJECT SPECIAL PROVISIONS FOR ORDER OF PREFERENCE.
5. BASEMAP INFORMATION PROVIDED BY PLACER COUNTY. THE COUNTY OF PLACER HAS MADE EVERY EFFORT TO SHOW LOCATIONS OF ANY AND ALL EXISTING SURFACE AND SUBSURFACE STRUCTURES. HOWEVER, ACTUAL CONDITIONS AND LOCATIONS CAN VARY CONSIDERABLY FROM PLAN LOCATIONS. THEREFORE, PLACER COUNTY CANNOT, AND DOES NOT, ASSUME RESPONSIBILITY OF THE EXISTENCE OR LOCATION OF ANY STRUCTURE SUCH AS, BUT NOT LIMITED TO, UTILITIES, PIPELINES AND SEWERS. THE CONTRACTOR IS RESPONSIBLE FOR CONTACTING ALL AGENCIES AND/OR OWNERS TO VERIFY THIS INFORMATION PRIOR TO AND DURING CONSTRUCTION OF IMPROVEMENTS SHOWN HEREON, AND TO CONTACT THE ENGINEER IN THE EVENT OF ANY SIGNIFICANT DISCREPANCY.
6. DATUM
=AN EXISTING BRASS CAP LOCATED IN A MONUMENT WELL AT THE INTERSECTION OF BIG SPRINGS DRIVE AND SILVER FOX COURT WITH ELEVATION = 6590.34
7. BASIS OF BEARING
=THE MEDIAN OF THIS SURVEY IS BASED ON GRID BEARINGS FROM THE CALIFORNIA COORDINATE SYSTEM OF 1927, ZONE 2, PER 4/SUR/10, AND BASED UPON THE RECORD LINE BETWEEN MONUMENTS 637–38, AND 637–40.
8. THE COUNTY OF PLACER OR ITS OFFICER OR AGENTS SHALL NOT BE RESPONSIBLE FOR THE ACCURACY OR COMPLETENESS OF ELECTRONIC COPIES OF THIS PLAN SHEET.

CONTACT INFORMATION:

UTILITY	COMPANY	CONTACT PERSON
ELECTRICITY	LIBERTY UTILITIES	RICK MADRID (TEL. (530) 412–2605)
WATER, SEWER, FIRE	NORTHSTAR CSD	ERIC MARTIN (TEL. (530) 308–1679)
TELECOMMUNICATIONS	AT&T	CAROL PRINCE (TEL. (530) 888–2031)
TV	CHARTER CABLE	ELIAS RUIZ (TEL. (775) 350–1290)
GAS	SOUTHWEST GAS CORPORATION	WALLY GOODMAN (TEL. (775) 887–2881)
PUBLIC WORKS	PLACER COUNTY	PHIL VASSION (TEL. (530) 745–7581)

RECORD DRAWINGS NOTE:

ALL INFORMATION SHOWN ON THESE PLANS HAS BEEN PREPARED BY, OR UNDER THE DIRECTION OF, THE UNDERSIGNED ENGINEER. ADJUSTMENTS MADE IN THE FIELD DURING CONSTRUCTION ARE INCLUDED HEREIN AND ARE BASED UPON FIELD OBSERVATIONS MADE UNDER THE DIRECTION OF OR BY THE UNDERSIGNED AND/OR INFORMATION RECEIVED FROM THE COUNTY CONSTRUCTION INSPECTOR, PROJECT CONTRACTORS AND OTHER SOURCES WHEN THE ENGINEER IS ADVISED IN WRITING OF SUCH ADJUSTMENTS. THE ENGINEER PREPARING THESE PLANS WILL NOT BE RESPONSIBLE FOR, OR LIABLE FOR, CHANGES TO THESE PLANS NOT AUTHORIZED BY THE ENGINEER. ADJUSTMENTS MADE IN THE FIELD WERE NOT SURVEYED AND THE ACCURACY OF THESE DRAWINGS WITH RESPECT TO THOSE ADJUSTMENTS IS NOT GUARANTEED BY THE ENGINEER OR PLACER COUNTY; FIELD VERIFICATION OF ALL IMPROVEMENTS IS RECOMMENDED.

DATE — ENGINEER SIGNATURE (STAMP OR SEAL)

CHAIR – BOARD OF SUPERVISORS — DATE

DIRECTOR OF PUBLIC WORKS — R.C.E. — DATE

RECORD DRAWINGS

INITIALS — DATE

CALL BEFORE YOU DIG
THE CONTRACTOR SHALL CALL UNDERGROUND SERVICE ALERT" (USA) AT 811 OR 800–227–2600 AT LEAST 2 WORKING DAYS PRIOR TO PERFORMING ANY EXCAVATION

No.	Revision	Description	Date	Approved

THE COUNTY OF PLACER, ITS OFFICERS, OR ITS AGENTS SHALL NOT BE RESPONSIBLE FOR THE ACCURACY OR COMPLETENESS OF ELECTRONIC COPIES OF THIS DOCUMENT.

NORTHSTAR ROUNDABOUT MODIFICATION PROJECT
COVER SHEET

DEPARTMENT OF PUBLIC WORKS
PLACER COUNTY CALIFORNIA

DATE: 07–18–2013
DESIGN: RP
DRAW: MER
CHECK: KAO

REGISTERED PROFESSIONAL ENGINEER RACHEL S. PRICE C 77191 Exp. 12/31/14 CIVIL STATE OF CALIFORNIA
DATE: 07-19-13

CONSTRUCTION CONTRACT NO. 1158
PROJECT NO. PC2960
SCALE
HORIZ:
VERT:
SCALE REFERENCE 0 — 1"
DRAWING COV
SHEET NO. 1 OF 13

I:\25\2011\012 Northstar RB\DESIGN\5112-COV.dwg 7/19/2013 10:14 AM

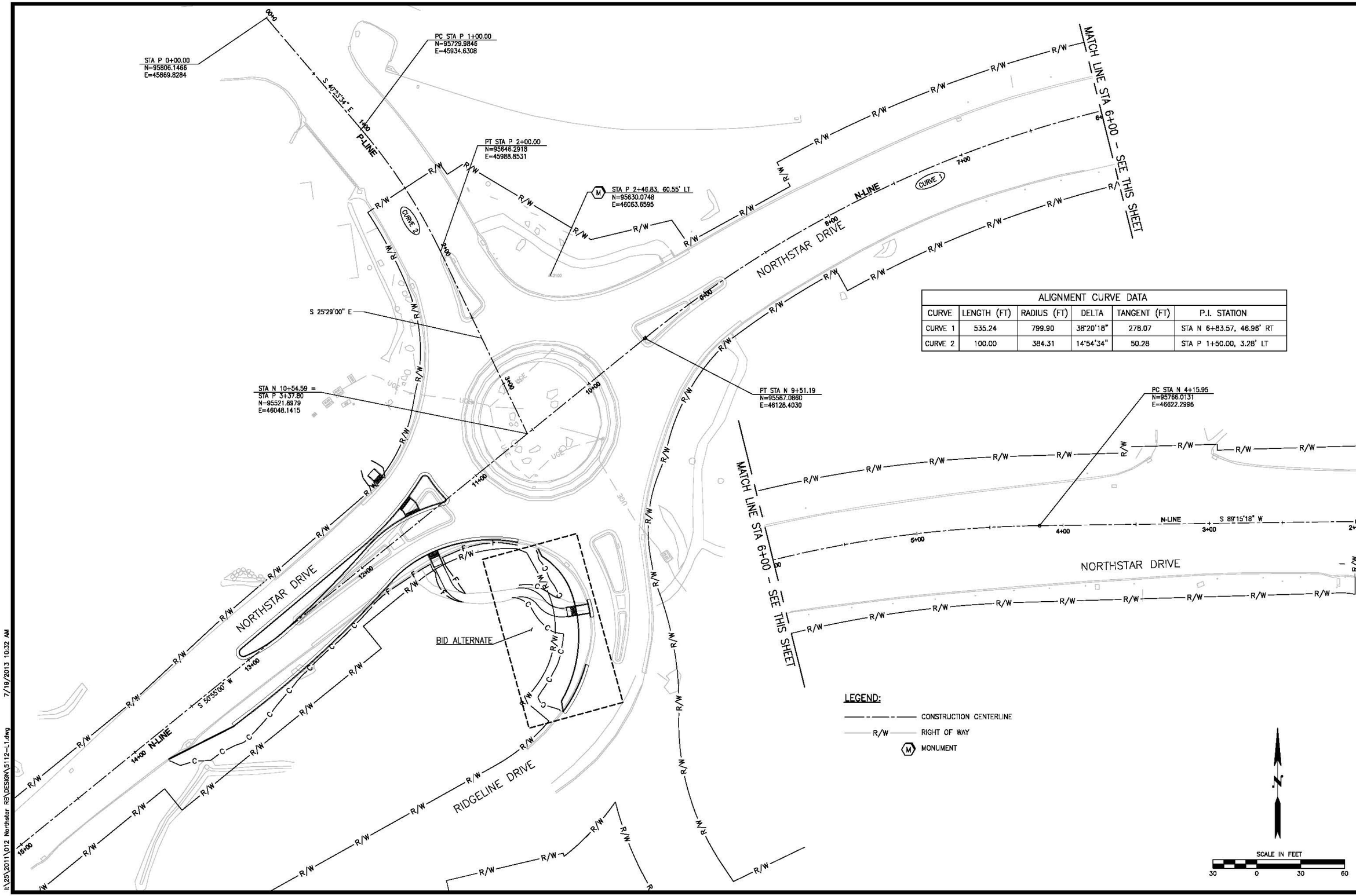

ALIGNMENT CURVE DATA					
CURVE	LENGTH (FT)	RADIUS (FT)	DELTA	TANGENT (FT)	P.I. STATION
CURVE 1	535.24	799.90	38°20'18"	278.07	STA N 6+83.57, 46.96' RT
CURVE 2	100.00	384.31	14°54'34"	50.28	STA P 1+50.00, 3.28' LT

LEGEND:

- CONSTRUCTION CENTERLINE
- R/W — RIGHT OF WAY
- (M) MONUMENT

No.	Revision	Description	Date	Approved

THE COUNTY OF PLACER, ITS OFFICERS, OR ITS AGENTS SHALL NOT BE RESPONSIBLE FOR THE ACCURACY OR COMPLETENESS OF ELECTRONIC COPIES OF THIS DOCUMENT.

NORTHSTAR ROUNDABOUT MODIFICATION PROJECT LAYOUT PLAN

DEPARTMENT OF PUBLIC WORKS

PLACER COUNTY CALIFORNIA

DATE: 07-18-2013
DESIGN: RP
DRAW: MER
CHECK: KAO

REGISTERED PROFESSIONAL ENGINEER RACHEL S. PRICE C 77191 Exp. 12/31/14 CIVIL STATE OF CALIFORNIA

DATE: 07-19-13

CONSTRUCTION CONTRACT NO. 1158

PROJECT NO. PC2960

SCALE
HORIZ:
VERT:

SCALE REFERENCE 0 — 1"

DRAWING L1

SHEET NO. 2 OF 13

I:\25\2011\012 Northstar RB\DESIGN\5112-L1.dwg 7/19/2013 10:32 AM

GENERAL NOTES:

1. SEE SHEETS U1 FOR UTILITY REMOVAL AND RELOCATION.
2. SEE SIGNING PLANS FOR SIGN REMOVAL AND RELOCATION. SIGNS/POSTS TO BE REMOVED SHALL BE SALVAGED AND DELIVERED TO PLACER COUNTY PER SPECIFICATIONS.
3. ALL EXISTING CHANNELIZATION CONFLICTING WITH PROPOSED CHANNELIZATION ON CHANNELIZATION SHEETS SHALL BE REMOVED. TIMING OF REMOVAL IS DEPENDENT ON CONSTRUCTION PHASING.
4. THE CLEARING AND GRUBBING LIMITS ARE FROM EDGE OF PAVEMENT/CURB TO CUT/FILL LINES.
5. CONTRACTOR SHALL RELOCATE, MODIFY, AND REPAIR ALL THE EXISTING IRRIGATION LINES AFFECTED BY THE CONSTRUCTION OF THE PROJECT.
6. EROSION CONTROL PER SPECIFICATIONS SHALL BE PROVIDED FOR ALL AREAS BETWEEN CUT/FILL LINES AND EDGE OF IMPROVEMENT.

CONSTRUCTION NOTES:

1. REMOVE CURB AND GUTTER
2. REALIGN PEDESTRIAN PATH PER GRADING AND PAVING PLANS
3. REMOVE ASPHALT DIKE
4. INLET PROTECTION TYPE 5 PER CALTRANS SP T64
5. TREE PROTECTION PER DETAIL ON MD1

CONSTRUCTION NOTES–BID ALTERNATE:

6. REMOVE TREE
7. REALIGN PEDESTRIAN PATH PER GRADING AND PAVING PLANS
8. REMOVE CURB AND GUTTER
9. TREE PROTECTION PER DETAIL ON MD1

LEGEND:

- REMOVE ASPHALT CONCRETE PAVEMENT
- REMOVE CEMENT CONCRETE
- EROSION CONTROL
- REMOVE CURB AND GUTTER/ASPHALT DIKE
- SAWCUT LIMITS
- R/W — RIGHT OF WAY
- C — C — CUT LINE
- F — F — FILL LINE
- REMOVE TREE

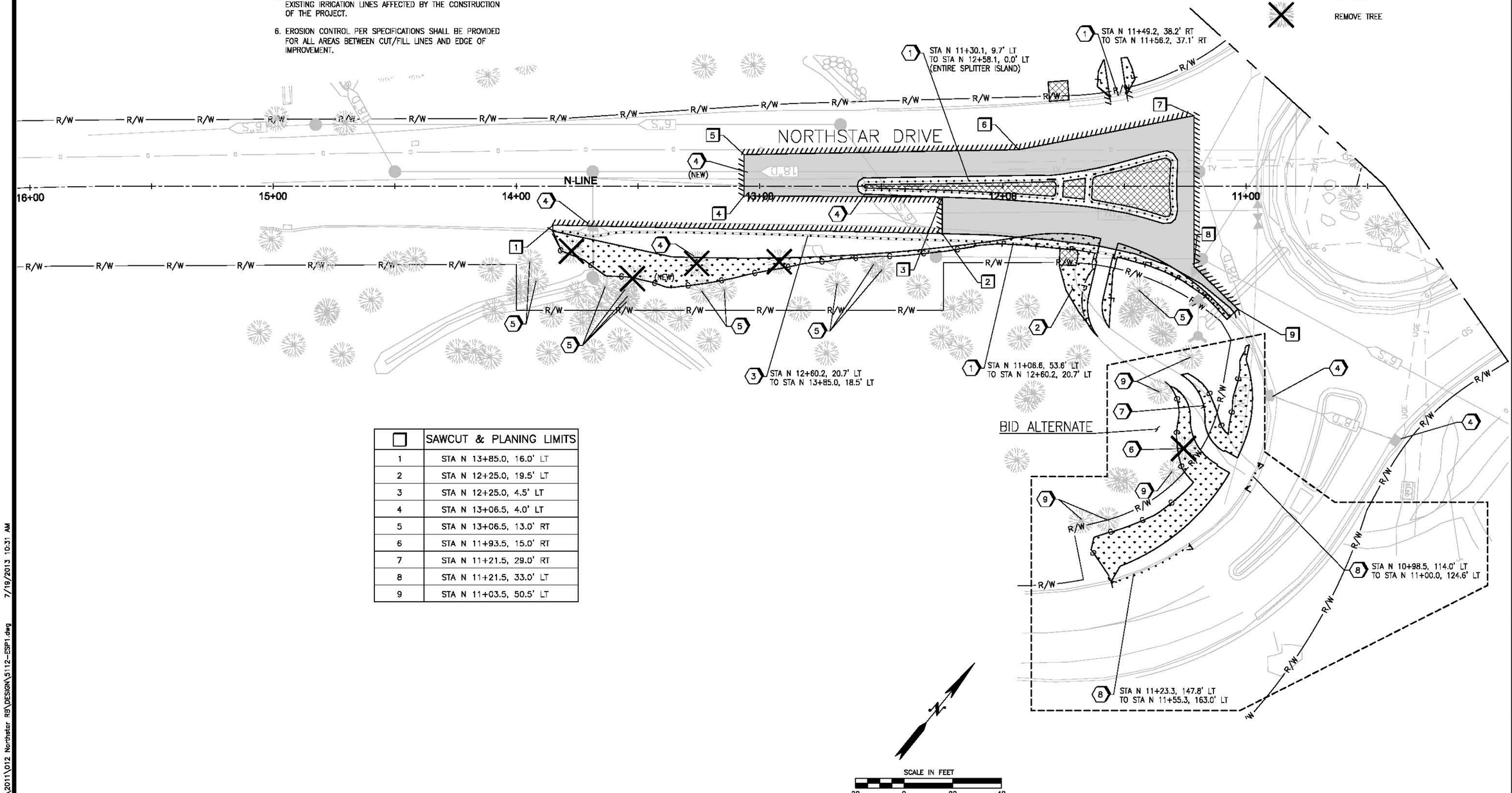

	SAWCUT & PLANING LIMITS
1	STA N 13+85.0, 16.0' LT
2	STA N 12+25.0, 19.5' LT
3	STA N 12+25.0, 4.5' LT
4	STA N 13+06.5, 4.0' LT
5	STA N 13+06.5, 13.0' RT
6	STA N 11+93.5, 15.0' RT
7	STA N 11+21.5, 29.0' RT
8	STA N 11+21.5, 33.0' LT
9	STA N 11+03.5, 50.5' LT

No.	Revision	Description	Date	Approved

THE COUNTY OF PLACER, ITS OFFICERS, OR ITS AGENTS SHALL NOT BE RESPONSIBLE FOR THE ACCURACY OR COMPLETENESS OF ELECTRONIC COPIES OF THIS DOCUMENT.

NORTHSTAR ROUNDABOUT MODIFICATION PROJECT
EROSION CONTROL AND SITE PREPARATION PLAN

PLACER COUNTY CALIFORNIA

DEPARTMENT OF PUBLIC WORKS

DATE: 07-18-2013
DESIGN: RP
DRAW: MER
CHECK: KAO

REGISTERED PROFESSIONAL ENGINEER RACHEL S. PRICE C 77191 Exp. 12/31/14 CIVIL STATE OF CALIFORNIA

DATE: 07-19-13

CONSTRUCTION CONTRACT NO. 1158

PROJECT NO. PC2960

SCALE
HORIZ:
VERT:
SCALE REFERENCE 0 — 1"

DRAWING ESP1

SHEET NO. 3 OF 13

I:\25\2011\012 Northstar RB\DESIGN\S112-ESP1.dwg 7/19/2013 10:31 AM

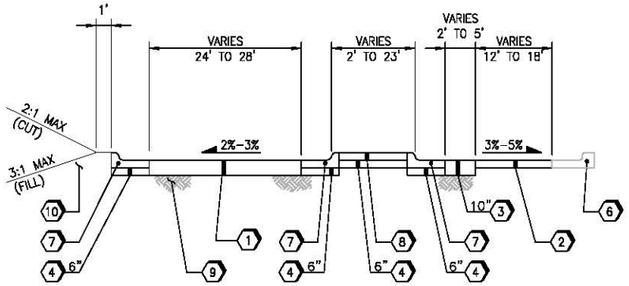

SECTION A–A – SPLITTER ISLAND A

NOT TO SCALE

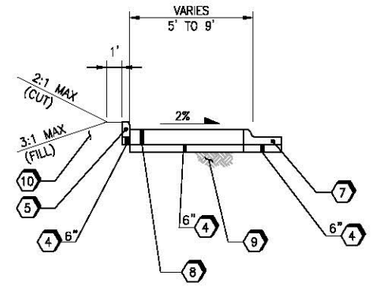

SECTION D–D – BID ALTERNATE

NOT TO SCALE

GENERAL NOTES:

1. SEE GRADING AND PAVING SHEETS FOR DIMENSIONS.

LEGEND:

1. ASPHALT PAVEMENT SECTION:

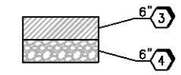

2. MICROSURFACE – TYPE 2
3. HOT MIX ASPHALT, TYPE A
4. CLASS 2 AGGREGATE BASE
5. TYPE A1–6 BARRIER CURB PER COUNTY OF PLACER PLATE R–21
6. EXISTING CURB AND GUTTER/DIKE
7. TYPE 1A ROLLED CURB AND GUTTER PER DETAIL ON SHEET MD1
8. 8" COLORED STAMPED CONCRETE WITH #4 REBAR AT 16" O/C BOTH WAYS PER SPECIFICATIONS
9. COMPACTED SUB–BASE TO 95% RELATIVE COMPACTION
10. GRAVEL BORROW
11. TYPE E ASPHALT DIKE PER COUNTY OF PLACER PLATE R–22

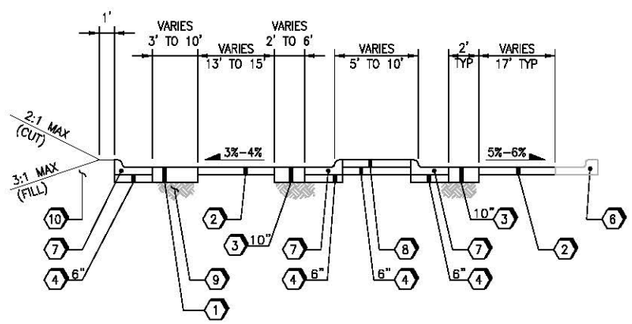

SECTION B–B – SPLITTER ISLAND B

NOT TO SCALE

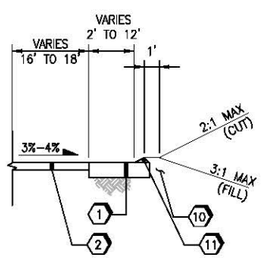

SECTION C–C – ASPHALT DIKE

NOT TO SCALE

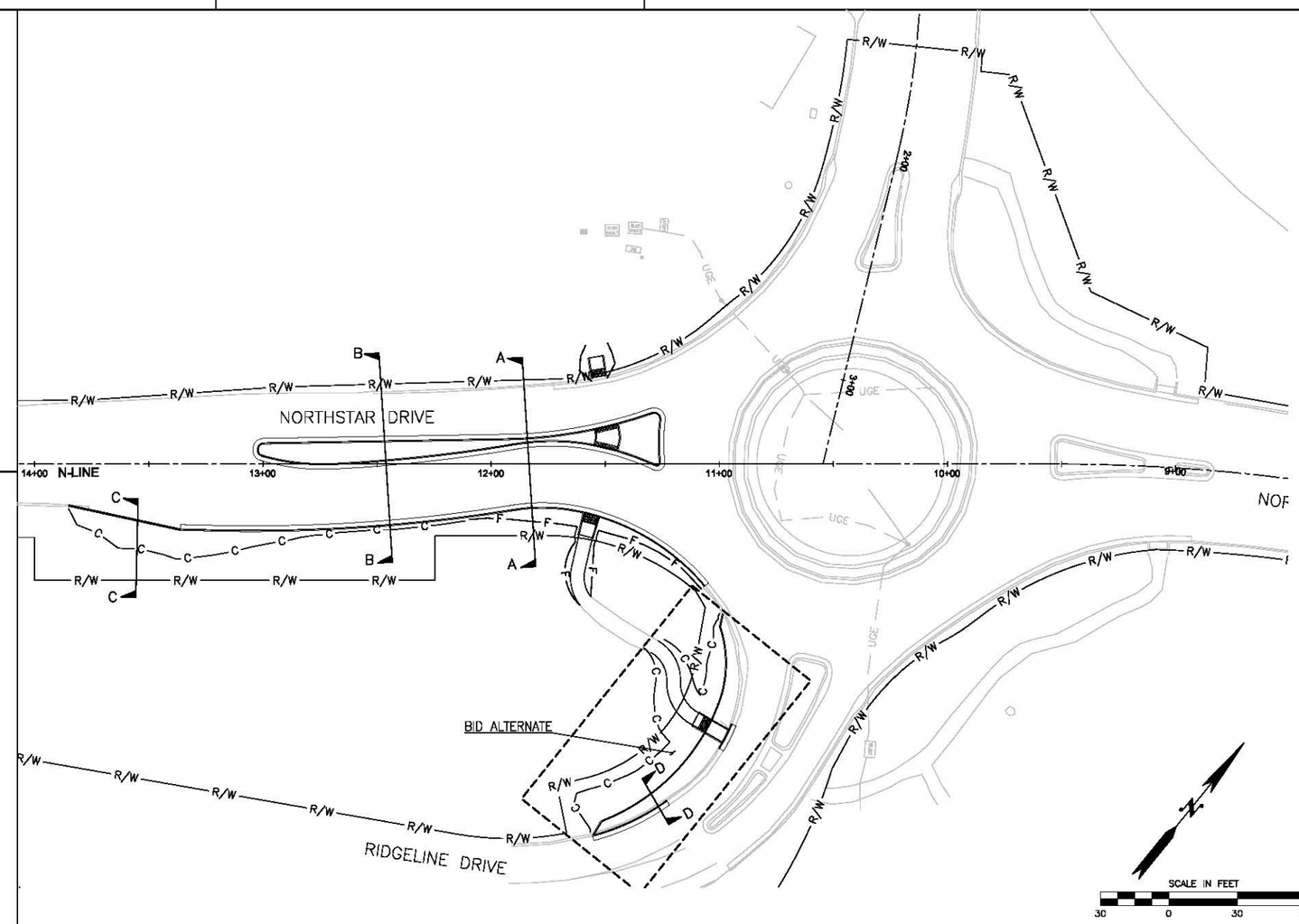

No.	Revision	Description	Date	Approved

THE COUNTY OF PLACER, ITS OFFICERS, OR ITS AGENTS SHALL NOT BE RESPONSIBLE FOR THE ACCURACY OR COMPLETENESS OF ELECTRONIC COPIES OF THIS DOCUMENT.

NORTHSTAR ROUNDABOUT MODIFICATION PROJECT
TYPICAL ROUNDABOUT SECTIONS

PLACER COUNTY CALIFORNIA

DEPARTMENT OF PUBLIC WORKS

DATE: 07–18–2013
DESIGN: RP
DRAW: MER
CHECK: KAO

REGISTERED PROFESSIONAL ENGINEER
RACHEL S. PRICE
C 77191
Exp. 12/31/14
CIVIL
STATE OF CALIFORNIA

DATE: 07-19-13

CONSTRUCTION CONTRACT NO.
1158

PROJECT NO.
PC2960

SCALE
HORIZ:
VERT:

SCALE REFERENCE
0 1"

DRAWING
RS1

SHEET NO.
4 OF 13

I:\25\2011\012 Northstar RB\DESIGN\5112-RS1.dwg 7/19/2013 10:33 AM

CURVE TABLE – BID ALTERNATE							CENTER POINT
CURVE	LENGTH	RADIUS	DELTA	TANGENT	STATION, OFFSET	STATION, OFFSET	STATION, OFFSET
20	36.09	100.00	20°40'48"	18.25	PC STA N 11+55.45, 163.03'LT	PCC STA N 11+23.00, 147.67'LT	STA N 11+81.29, 66.42'LT
21	12.00	70.00	09°49'26"	6.02	PCC STA N 11+00.01, 124.64'LT	PCC STA N 10+94.44, 114.02'LT	STA N 11+58.99, 86.94'LT
22	34.70	50.00	39°45'38"	18.08	PC STA N 10+99.52, 71.34'LT	PCC STA N 11+00.32, 105.33'LT	STA N 11+46.92, 87.23'LT
23	74.58	90.00	47°28'35"	39.58	PCC STA N 11+00.32, 105.33'LT	PT STA N 11+51.52, 156.60'LT	STA N 11+84.21, 72.75'LT
24	23.46	21.00	64°01'13"	13.13	PC STA N 11+11.83, 114.38'LT	PRC STA N 11+23.01, 95.13'LT	STA N 11+02.02, 95.81'LT
25	14.99	14.00	61°21'10"	8.30	PRC STA N 11+23.01, 95.13'LT	PT STA N 11+29.89, 82.61'LT	STA N 11+37.00, 94.67'LT

GENERAL NOTES:

1. ALL ELEVATIONS LABELED ALONG FLOW LINE.
2. DIMENSIONS ARE TO FACE OF CURB.
3. SEE PAVING PLANS, SITE PREPARATION PLANS, AND TYPICAL ROUNDABOUT SECTIONS FOR ADDITIONAL PAVING LIMIT AND CURB INFORMATION.

LEGEND:

(X)	CURVE ID
—F——F—	FILL LINE
—C——C—	CUT LINE
——R/W——	RIGHT OF WAY
×X.XX	SPOT ELEVATION 620X.XX FINISHED GRADE AT FLOW LINE
M.E.	MATCH EXISTING
1/2	1/2 DELTA OF CURVE OR 1/2 POINT ALONG A LINE SEGMENT
1/4	1/4 DELTA OF CURVE OR 1/4 POINT ALONG A LINE SEGMENT
1/8	1/8 DELTA OF CURVE OR 1/8 POINT ALONG A LINE SEGMENT
LP	LOW POINT
AP	ANGLE POINT

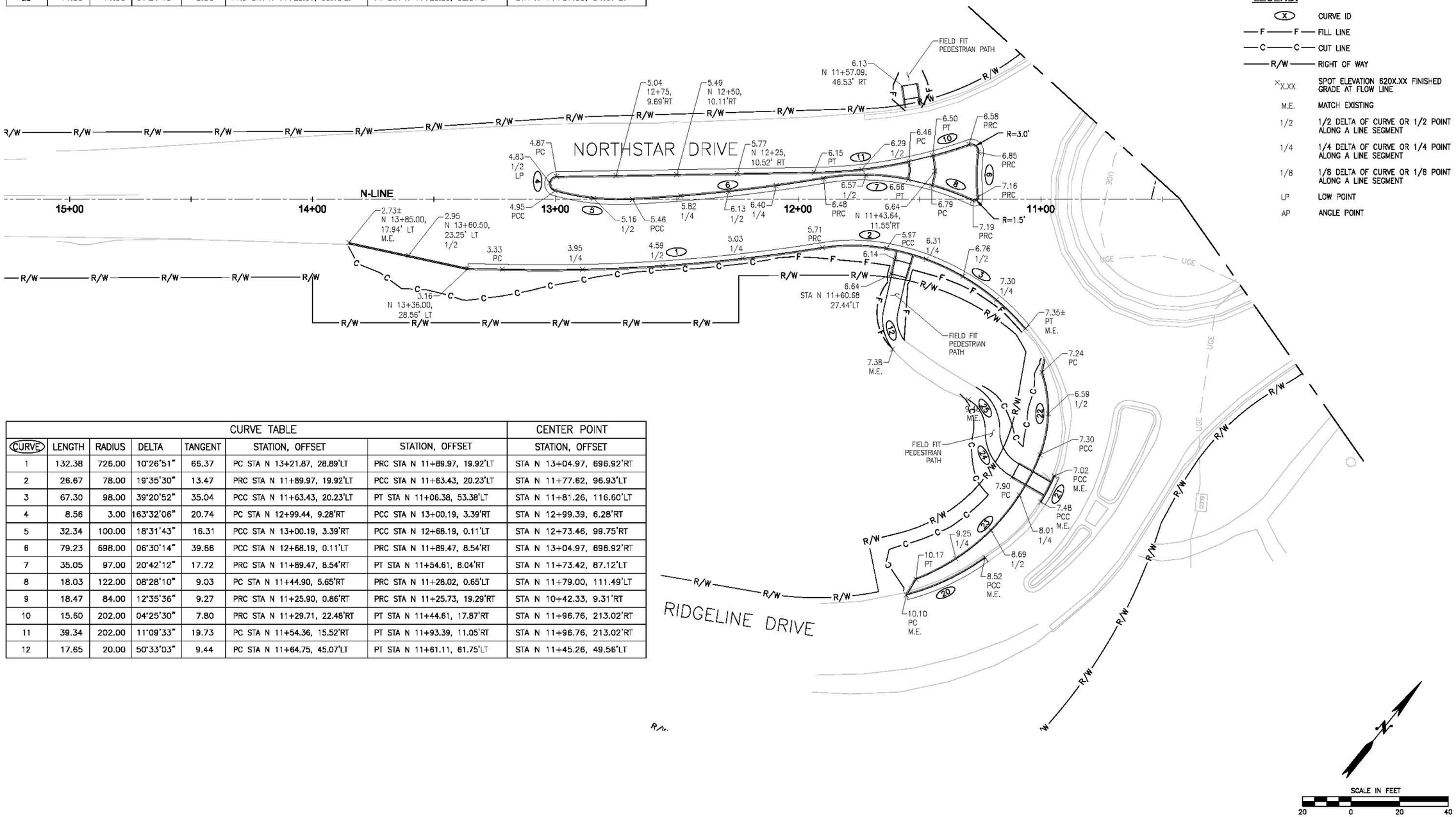

CURVE TABLE							CENTER POINT
CURVE	LENGTH	RADIUS	DELTA	TANGENT	STATION, OFFSET	STATION, OFFSET	STATION, OFFSET
1	132.38	726.00	10°26'51"	66.37	PC STA N 13+21.87, 28.89'LT	PRC STA N 11+89.97, 19.92'LT	STA N 13+04.97, 696.92'RT
2	26.67	78.00	19°35'30"	13.47	PRC STA N 11+89.97, 19.92'LT	PCC STA N 11+63.43, 20.23'LT	STA N 11+77.62, 96.93'LT
3	67.30	98.00	39°20'52"	35.04	PCC STA N 11+63.43, 20.23'LT	PT STA N 11+06.38, 53.38'LT	STA N 11+81.26, 116.60'LT
4	8.56	3.00	163°32'06"	20.74	PC STA N 12+99.44, 9.28'RT	PCC STA N 13+00.19, 3.39'RT	STA N 12+99.39, 6.28'RT
5	32.34	100.00	18°31'43"	16.31	PCC STA N 13+00.19, 3.39'RT	PCC STA N 12+68.19, 0.11'LT	STA N 12+73.46, 99.75'RT
6	79.23	698.00	06°30'14"	39.66	PCC STA N 12+68.19, 0.11'LT	PRC STA N 11+89.47, 8.54'RT	STA N 13+04.97, 696.92'RT
7	35.05	97.00	20°42'12"	17.72	PRC STA N 11+89.47, 8.54'RT	PT STA N 11+54.61, 8.04'RT	STA N 11+73.42, 87.12'LT
8	18.03	122.00	08°28'10"	9.03	PC STA N 11+44.90, 5.65'RT	PRC STA N 11+28.02, 0.65'LT	STA N 11+79.00, 111.49'LT
9	18.47	84.00	12°35'36"	9.27	PRC STA N 11+25.90, 0.86'RT	PRC STA N 11+25.73, 19.29'RT	STA N 10+42.33, 9.31'RT
10	15.60	202.00	04°25'30"	7.80	PRC STA N 11+29.71, 22.48'RT	PT STA N 11+44.61, 17.87'RT	STA N 11+96.76, 213.02'RT
11	39.34	202.00	11°09'33"	19.73	PC STA N 11+54.36, 15.52'RT	PT STA N 11+93.39, 11.05'RT	STA N 11+96.76, 213.02'RT
12	17.65	20.00	50°33'03"	9.44	PC STA N 11+64.75, 45.07'LT	PT STA N 11+61.11, 61.75'LT	STA N 11+45.26, 49.56'LT

No.	Revision	Description	Date	Approved

THE COUNTY OF PLACER, ITS OFFICERS, OR ITS AGENTS SHALL NOT BE RESPONSIBLE FOR THE ACCURACY OR COMPLETENESS OF ELECTRONIC COPIES OF THIS DOCUMENT.

NORTHSTAR ROUNDABOUT MODIFICATION PROJECT GRADING PLAN

PLACER COUNTY CALIFORNIA

DEPARTMENT OF PUBLIC WORKS

DATE: 07-18-2013
DESIGN: RP
DRAW: MER
CHECK: KAO

REGISTERED PROFESSIONAL ENGINEER RACHEL S. PRICE C 77191 Exp. 12/31/14 CIVIL STATE OF CALIFORNIA

DATE: 07-19-13

CONSTRUCTION CONTRACT NO. 1158

PROJECT NO. PC2960

SCALE
HORIZ:
VERT:
SCALE REFERENCE 0 — 1"

DRAWING G1

SHEET NO. 5 OF 13

I:\25\2011\012 Northstar RB\DESIGN\5112-G1.dwg 7/19/2013 10:31 AM

GENERAL NOTES:

1. ALL DIMENSIONS ARE TO FACE OF CURB UNLESS OTHERWISE NOTED.
2. INSTALL 12" DEEP, 2" GALV SNOW POLE SLEEVES EVERY 15' ALONG CURBS AND ON BOTH SIDES OF CURB INLETS PER DETAIL ON SHEET MD1.

LEGEND:

- ASPHALT PAVEMENT SECTION
- 10" HMA, TYPE A
- MICROSURFACE – TYPE 2
- 8" COLORED STAMPED CONCRETE
- PEDESTRIAN PATH – 4" COMPACTED AGGREGATE BASE
- SAWCUT LIMITS, SEE SHEET ESP1 FOR DETAILS

CONSTRUCTION NOTES:

1. TYPE 1A ROLLED CURB AND GUTTER PER DETAIL ON SHEET MD1
2. SIDEWALK IN SPLITTER ISLAND PER DETAIL ON SHEET MD1
3. CEMENT CONCRETE CURB RAMP F PER DETAIL ON SHEET MD1
4. TYPE E ASPHALT CONCRETE DIKE PER COUNTY OF PLACER PLATE R-22

CONSTRUCTION NOTES–BID ALTERNATE:

5. TYPE 1A ROLLED CURB AND GUTTER PER DETAIL ON SHEET MD1
6. CEMENT CONCRETE CURB RAMP F(ALT) PER DETAIL ON SHEET MD1
7. TYPE A1-6 BARRIER CURB PER COUNTY OF PLACER PLATE R-21

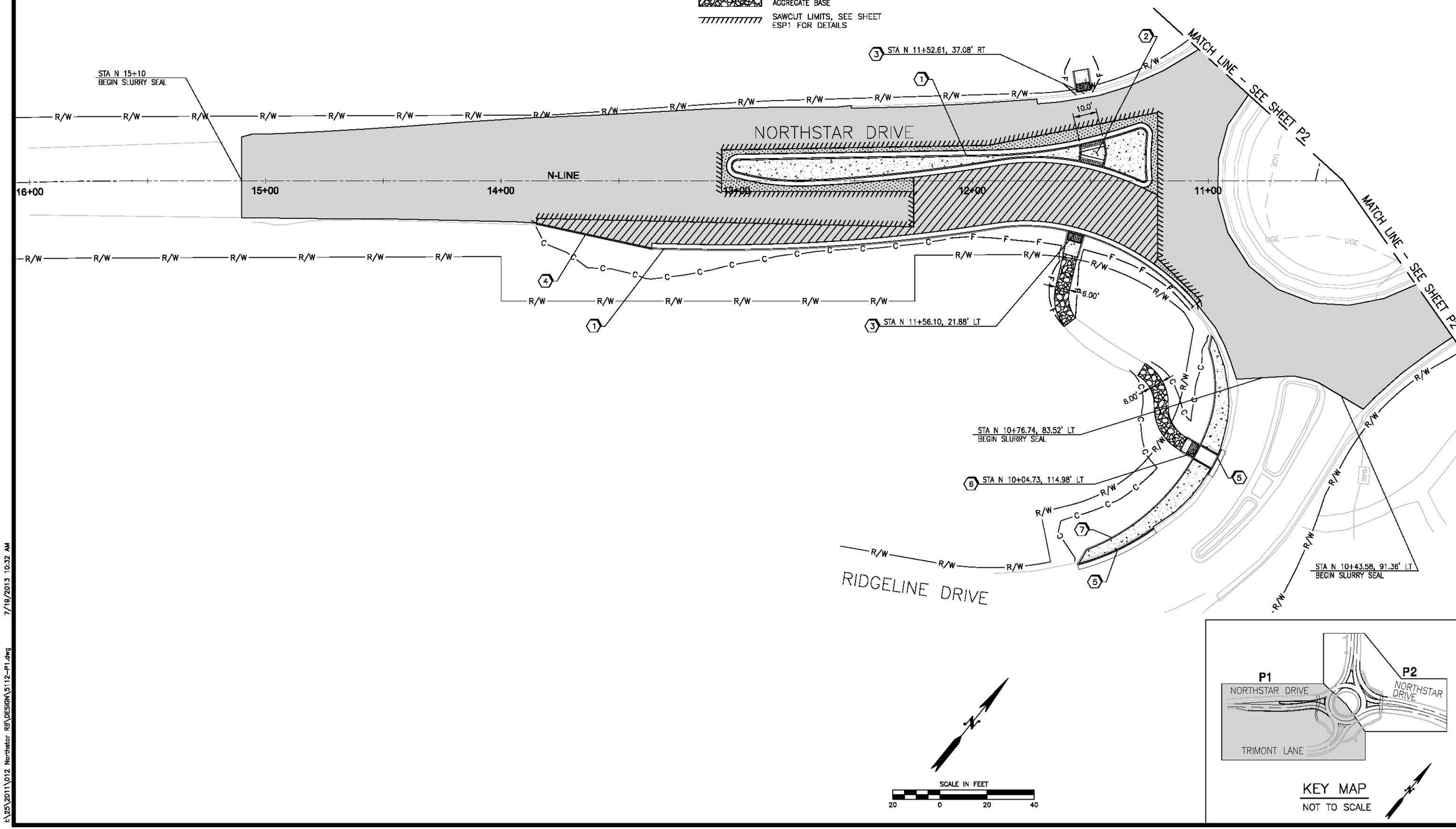

KEY MAP
NOT TO SCALE

No.	Revision	Description	Date	Approved

THE COUNTY OF PLACER, ITS OFFICERS, OR ITS AGENTS SHALL NOT BE RESPONSIBLE FOR THE ACCURACY OR COMPLETENESS OF ELECTRONIC COPIES OF THIS DOCUMENT.

NORTHSTAR ROUNDABOUT MODIFICATION PROJECT PAVING PLAN

DEPARTMENT OF PUBLIC WORKS
PLACER COUNTY CALIFORNIA

DATE: 07-18-2013
DESIGN: RP
DRAW: MER
CHECK: KAO

REGISTERED PROFESSIONAL ENGINEER
RACHEL S. PRICE
C 77191
Exp. 12/31/14
CIVIL
STATE OF CALIFORNIA
DATE: 07-19-13

CONSTRUCTION CONTRACT NO.
1158
PROJECT NO.
PC2960
SCALE
HORIZ:
VERT:
SCALE REFERENCE
0 1"
DRAWING
P1
SHEET NO.
6 OF 13

I:\25\2011\012 Northstar RB\DESIGN\5112-P1.dwg 7/19/2013 10:32 AM

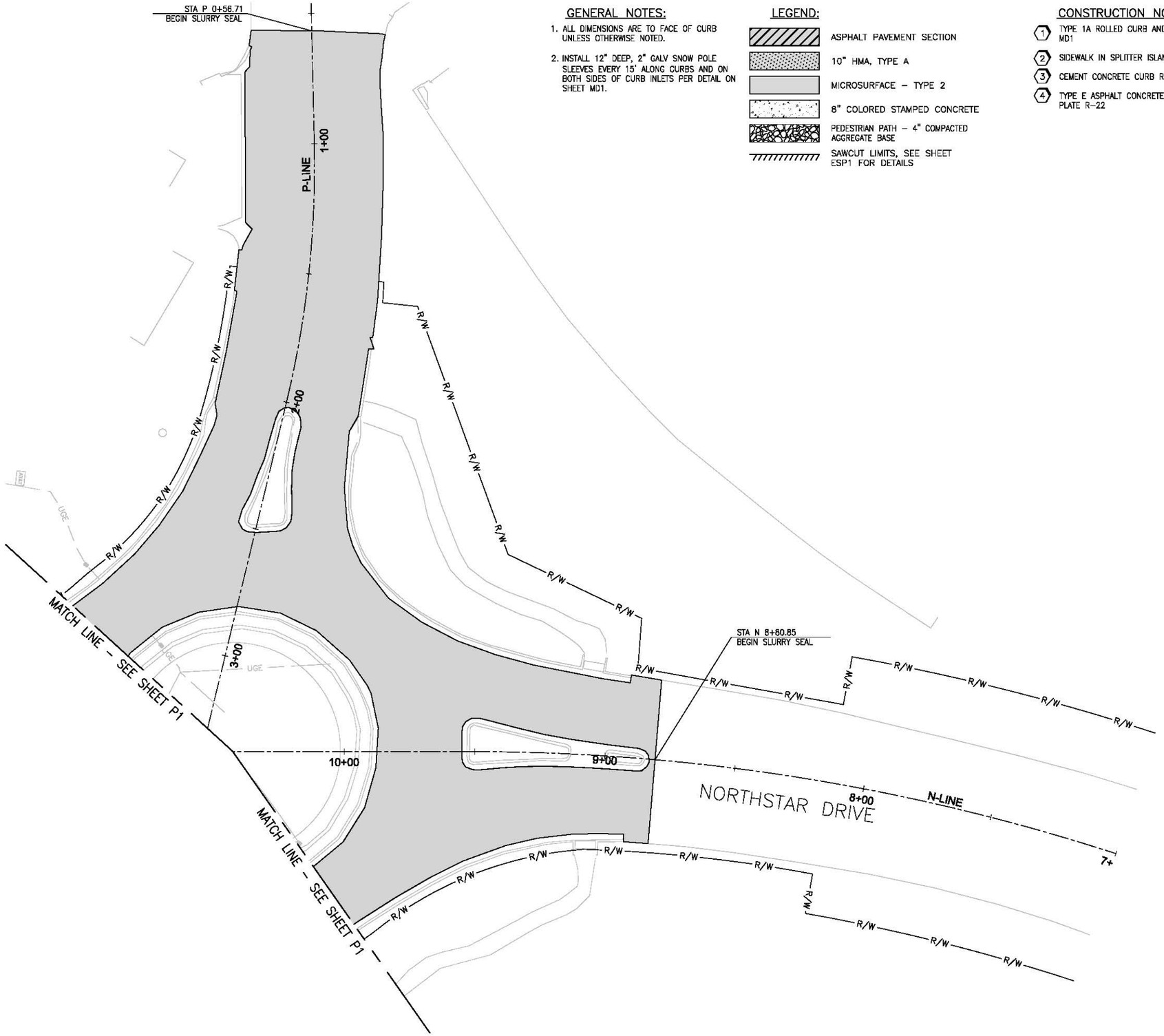

GENERAL NOTES:

1. ALL DIMENSIONS ARE TO FACE OF CURB UNLESS OTHERWISE NOTED.
2. INSTALL 12" DEEP, 2" GALV SNOW POLE SLEEVES EVERY 15' ALONG CURBS AND ON BOTH SIDES OF CURB INLETS PER DETAIL ON SHEET MD1.

LEGEND:

- ASPHALT PAVEMENT SECTION
- 10" HMA, TYPE A
- MICROSURFACE – TYPE 2
- 8" COLORED STAMPED CONCRETE
- PEDESTRIAN PATH – 4" COMPACTED AGGREGATE BASE
- SAWCUT LIMITS, SEE SHEET ESP1 FOR DETAILS

CONSTRUCTION NOTES:

1. TYPE 1A ROLLED CURB AND GUTTER PER DETAIL ON SHEET MD1
2. SIDEWALK IN SPLITTER ISLAND PER DETAIL ON SHEET MD1
3. CEMENT CONCRETE CURB RAMP F PER DETAIL ON SHEET MD1
4. TYPE E ASPHALT CONCRETE DIKE PER COUNTY OF PLACER PLATE R-22

CONSTRUCTION NOTES–BID ALTERNATE:

5. TYPE 1A ROLLED CURB AND GUTTER PER DETAIL ON SHEET MD1
6. CEMENT CONCRETE CURB RAMP F(ALT) PER DETAIL ON SHEET MD1
7. TYPE A1-6 BARRIER CURB PER COUNTY OF PLACER PLATE R-21

SCALE IN FEET
20 0 20 40

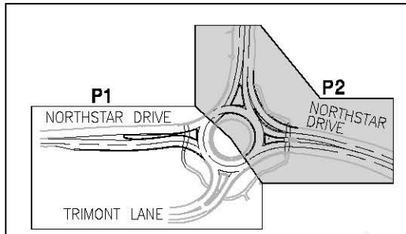

KEY MAP
NOT TO SCALE

No.	Revision	Description	Date	Approved

THE COUNTY OF PLACER, ITS OFFICERS, OR ITS AGENTS SHALL NOT BE RESPONSIBLE FOR THE ACCURACY OR COMPLETENESS OF ELECTRONIC COPIES OF THIS DOCUMENT.

NORTHSTAR ROUNDABOUT MODIFICATION PROJECT
PAVING PLAN

PLACER COUNTY CALIFORNIA
DEPARTMENT OF PUBLIC WORKS

DATE: 07-18-2013
DESIGN: RP
DRAW: MER
CHECK: KAO

REGISTERED PROFESSIONAL ENGINEER RACHEL S. PRICE C 77191 Exp. 12/31/14 CIVIL STATE OF CALIFORNIA
DATE: 07-19-13

CONSTRUCTION CONTRACT NO. 1158
PROJECT NO. PC2960
SCALE
HORIZ:
VERT:
SCALE REFERENCE 0 — 1"
DRAWING P2
SHEET NO. 7 OF 13

I:\25\2011\012 Northstar RB\DESIGN\5112-P1.dwg 7/19/2013 10:32 AM

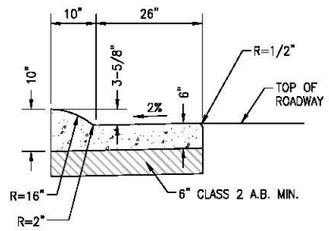

TYPE 1A ROLLED CURB & GUTTER

NOT TO SCALE

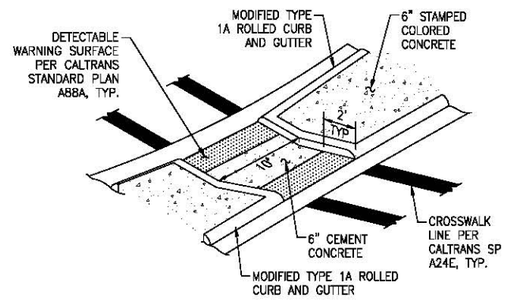

SIDEWALK IN SPLITTER ISLAND

NOT TO SCALE

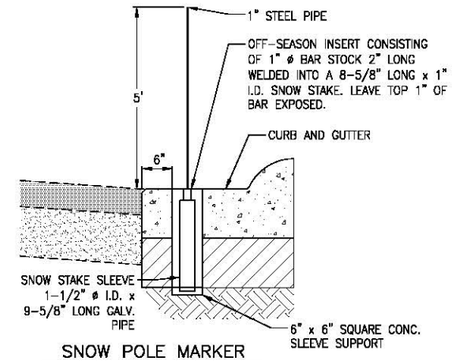

SNOW POLE MARKER

NOT TO SCALE

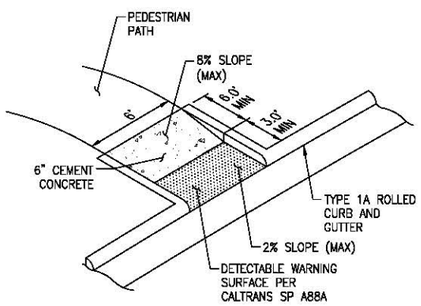

CEMENT CONCRETE CURB RAMP F

NOT TO SCALE

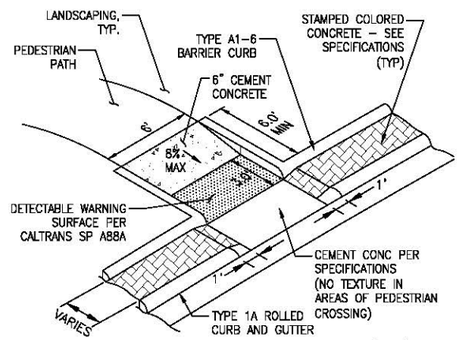

CEMENT CONCRETE CURB RAMP F(ALT)

NOT TO SCALE

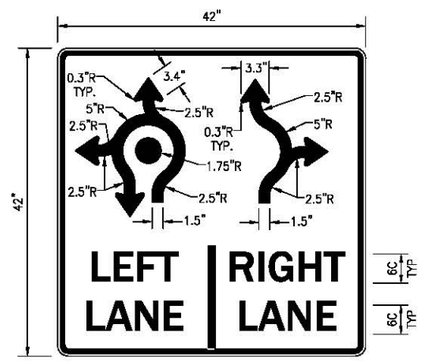

1

R3-8 MOD 1 DETAIL

NOT TO SCALE

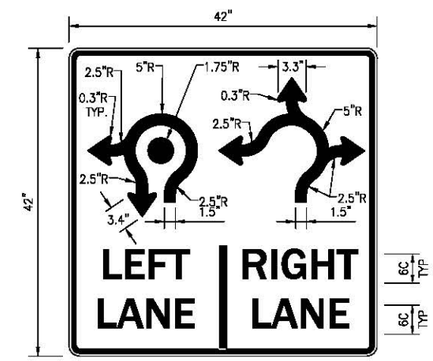

29

R3-8 MOD 2 DETAIL

NOT TO SCALE

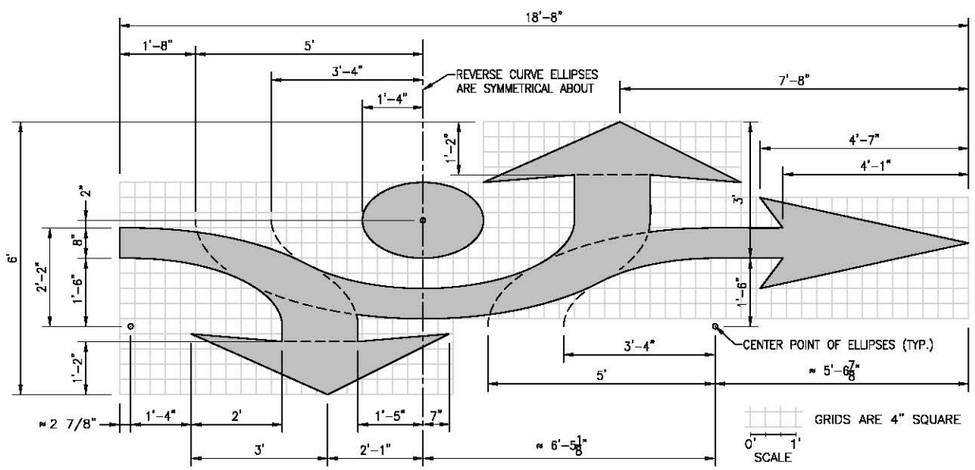

FISH HOOK ARROW (STRAIGHT-RIGHT-LEFT)

SCALE AS INDICATED
AREA = 28.70 SF

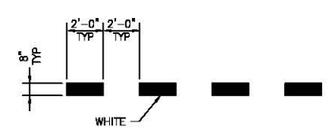

RECESSED THERMOPLASTIC DOTTED WIDE LINE DETAIL

NOT TO SCALE

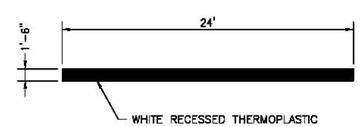

STOP LINE

NOT TO SCALE

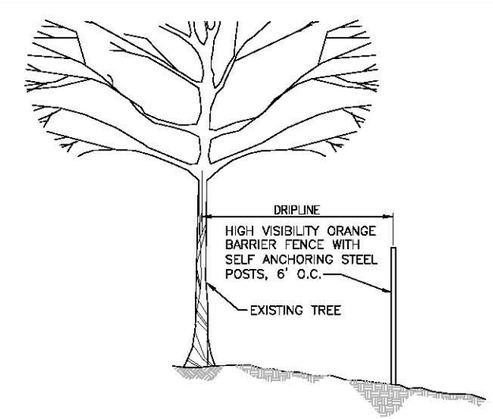

TREE PROTECTION DETAIL

NOT TO SCALE

No.	Revision	Description	Date	Approved

THE COUNTY OF PLACER, ITS OFFICERS, OR ITS AGENTS SHALL NOT BE RESPONSIBLE FOR THE ACCURACY OR COMPLETENESS OF ELECTRONIC COPIES OF THIS DOCUMENT.

NORTHSTAR ROUNDABOUT
MODIFICATION PROJECT
MISCELLANEOUS DETAILS

DEPARTMENT OF PUBLIC WORKS
PLACER COUNTY CALIFORNIA

DATE: 07-18-2013
DESIGN: RP
DRAW: MER
CHECK: KAO

REGISTERED PROFESSIONAL ENGINEER RACHEL S. PRICE C 77191 Exp. 12/31/14 CIVIL STATE OF CALIFORNIA

DATE: 07-19-13

CONSTRUCTION CONTRACT NO.
1158

PROJECT NO.
PC2960

SCALE
HORIZ:
VERT:
SCALE REFERENCE
0 — 1"

DRAWING
MD1

SHEET NO.
8 OF 13

I:\25\2011\012 Northstar RB\DESIGN\5112-MD1.dwg 7/19/2013 10:32 AM

GENERAL NOTES:

1. THE LOCATIONS OF CURB INLETS ARE MEASURED PER DETAILS ON DP1.
2. THE LOCATION OF THE MANHOLE IS MEASURED AT CENTER OF STRUCTURE.
3. SEE SHEET DP1 FOR DRAINAGE PROFILES AND DETAILS.

LEGEND:

R/W	RIGHT-OF-WAY
	PROPOSED HDPE STORM DRAIN PIPE
■	PROPOSED DRAINAGE STRUCTURE

CONSTRUCTION NOTES:

1. STA N 13+68.61, 19.87'LT
   CONSTRUCT 48" PRECAST STORM DRAIN MANHOLE PER COUNTY OF PLACER PLATE U-7 WITH STANDARD FRAME AND COVER PER COUNTY OF PLACER PLATE U-6.
   INTERCEPT EXISTING 18" STORM DRAIN (N&S)
   CONNECT TO STRUCTURE CI-1 WITH 15" HDPE STORM DRAIN PIPE.
2. STA N 13+32.97, 27.22'LT
   CONSTRUCT 24" X 36" CURB INLET CI-1 PER DETAIL ON SHEET DP1.
3. STA N 13+03.47, 5.85' RT
   CONSTRUCT 24" X 36" CURB INLET CI-2 PER DETAIL ON SHEET DP1. INTERCEPT EXISTING 18" STORM DRAIN.
4. REMOVE EXISTING DRAINAGE STRUCTURE
5. REMOVE/ABANDON EXISTING STORM DRAINAGE PIPE
6. MODIFY STRUCTURE WITH METAL PLATE TO PREVENT STORMWATER RUNOFF INTO OUTLET. PLATE SHALL BE PROVIDED AND ATTACHED IN THE FIELD PER CONTRACTOR'S RECOMMENDATION AND ENGINEER'S APPROVAL.
7. PERFORATED UNDERDRAIN PIPE TO BE ABANDONED OR REMOVED

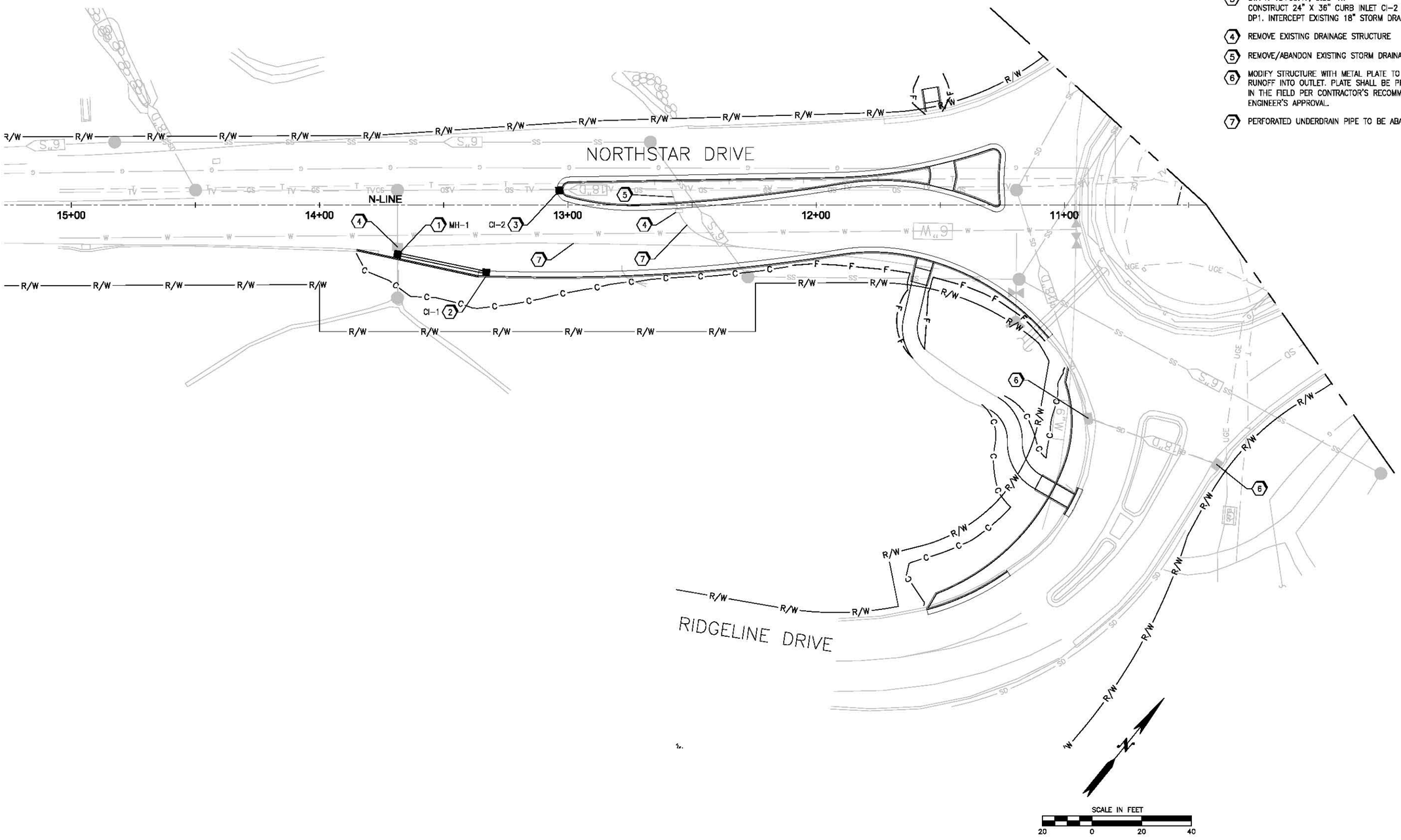

No.	Revision Description	Date	Approved

THE COUNTY OF PLACER, ITS OFFICERS, OR ITS AGENTS SHALL NOT BE RESPONSIBLE FOR THE ACCURACY OR COMPLETENESS OF ELECTRONIC COPIES OF THIS DOCUMENT.

NORTHSTAR ROUNDABOUT MODIFICATION PROJECT UTILITY PLAN

DEPARTMENT OF PUBLIC WORKS
PLACER COUNTY CALIFORNIA

DATE: 07-18-2013
DESIGN: RP
DRAW: MER
CHECK: KAO

REGISTERED PROFESSIONAL ENGINEER
RACHEL S. PRUCE
C 77191
Exp. 12/31/14
CIVIL
STATE OF CALIFORNIA

DATE: 07-19-13

CONSTRUCTION CONTRACT NO.
1158

PROJECT NO.
PC2960

SCALE
HORIZ:
VERT:
SCALE REFERENCE
0 — 1"

DRAWING
U1

SHEET NO.
9 OF 13

I:\25\2011\012 Northstar RB\DESIGN\5112-U1.dwg 7/19/2013 10:33 AM

GENERAL NOTES:

1. ALL EXISTING UTILITIES MUST BE FIELD VERIFIED FOR EXACT LOCATIONS FOR EACH UTILITY CROSSING.
2. PIPE LENGTHS AND SLOPES ARE CALCULATED FROM THE CENTER OF THE STRUCTURE.

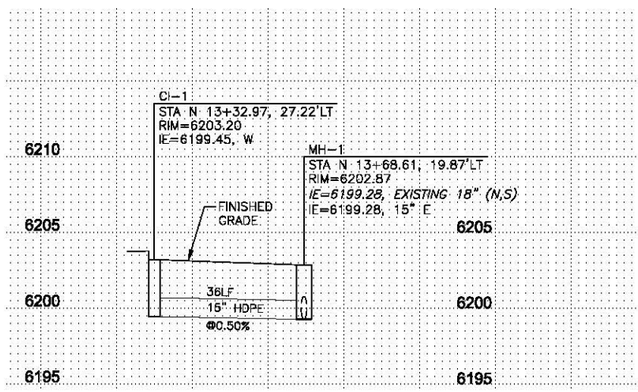

CI-1 TO MH-1

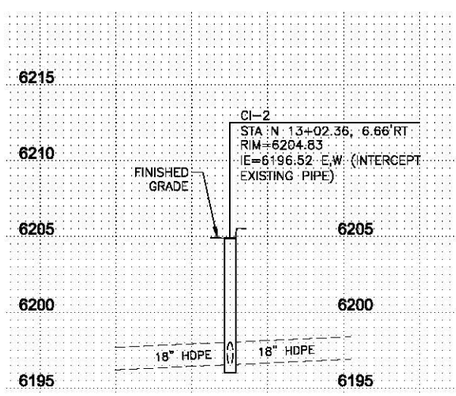

CI-2

DRAINAGE PROFILES

HORIZ SCALE IN FEET

20 0 20 40

VERT SCALE IN FEET

5 0 5 10

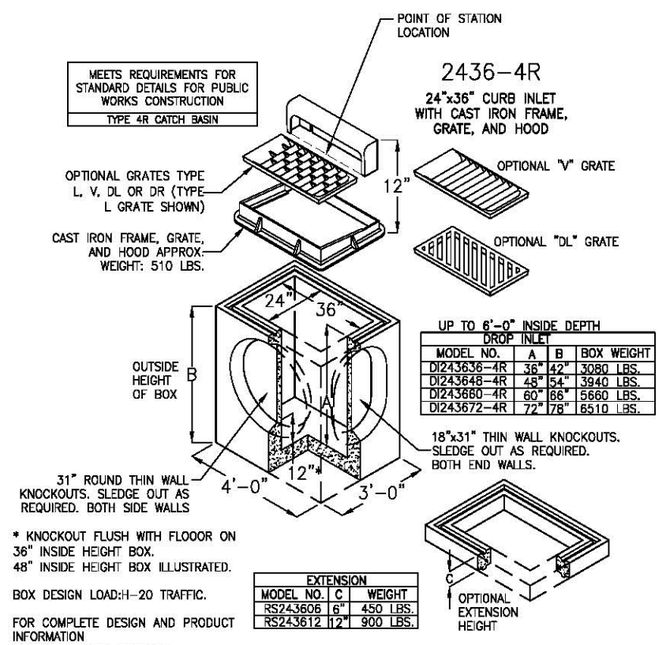

UP TO 6'-0" INSIDE DEPTH DROP INLET

MODEL NO.	A	B	BOX WEIGHT
DI243636-4R	36"	42"	3080 LBS.
DI243648-4R	48"	54"	3940 LBS.
DI243660-4R	60"	66"	5660 LBS.
DI243672-4R	72"	78"	6510 LBS.

* KNOCKOUT FLUSH WITH FLOOOR ON 36" INSIDE HEIGHT BOX.
48" INSIDE HEIGHT BOX ILLUSTRATED.

BOX DESIGN LOAD:H-20 TRAFFIC.

FOR COMPLETE DESIGN AND PRODUCT INFORMATION CONTACT JENSEN PRECAST.

EXTENSION

MODEL NO.	C	WEIGHT
RS243606	6"	450 LBS.
RS243612	12"	900 LBS.

7/3/2012
5112-DP1.DWG
© 2012

Jensen Precast reserves the right to make changes to product design and/or dimensions without notice. Please contact Jensen Precast whenever necessary for confirmation or advice on product design.

JENSEN PRECAST

24" X 36" CURB INLET

NOT TO SCALE

No.	Revision	Description	Date	Approved

SEE THIS SHEET

THE COUNTY OF PLACER, ITS OFFICERS, OR ITS AGENTS SHALL NOT BE RESPONSIBLE FOR THE ACCURACY OR COMPLETENESS OF ELECTRONIC COPIES OF THIS DOCUMENT.

NORTHSTAR ROUNDABOUT
MODIFICATION PROJECT
DRAINAGE PROFILES AND DETAILS

PLACER COUNTY CALIFORNIA
DEPARTMENT OF PUBLIC WORKS

DATE: 07-18-2013
DESIGN: RP
DRAW: MER
CHECK: KAO

REGISTERED PROFESSIONAL ENGINEER
RACHEL S. PRICE
C 77191
Exp. 12/31/14
CIVIL
STATE OF CALIFORNIA

DATE: 07-19-13

CONSTRUCTION CONTRACT NO.
1158

PROJECT NO.
PC2960

SCALE
HORIZ:
VERT:
SCALE REFERENCE
0 1"

DRAWING
DP1

SHEET NO.
10 OF 13

E:\25\2011\012 Northstar RB\DESIGN\5112-DP1.dwg 7/19/2013 10:31 AM

KEY MAP
NOT TO SCALE

GENERAL NOTES:

1. DIMENSIONS ARE TO FACE OF CURB OR CENTER OF STRIPE.
2. SEE SHEET CSD1 FOR CHANNELIZATION DETAILS AND SIGN SCHEDULE.
3. SIGN POST LOCATIONS SHALL BE APPROVED BY ENGINEER PRIOR TO EXCAVATION.
4. ALL PAVEMENT MARKINGS SHALL BE PAINTED AND ALL STRIPING SHALL BE RECESSED THERMOPLASTIC PER CALTRANS SP A20D UNLESS OTHERWISE NOTED.
5. WHEN ADJACENT TO CURB, CENTER OF STRIPE IS 2.0' FROM FACE OF CURB UNLESS OTHERWISE NOTED.
6. CALL UNDERGROUND SERVICE ALERT AT 811 TO CHECK FOR UNDERGROUND UTILITIES PRIOR TO PLACEMENT OF SIGN POSTS.

LEGEND:

- EXISTING SIGN (ONE POST)
- EXISTING SIGN (TWO POSTS)
- PROPOSED SIGN
- (1) NEW SIGN
- [1] SIGN REMOVAL
- [1] NEW LOCATION / SIGN RELOCATION / OLD LOCATION
- (1) SIGN TO REMAIN

CONSTRUCTION NOTES:

1. NOT USED THIS SHEET
2. LEFT EDGELINE PER CALTRANS SP A20B DETAIL 24
3. CHANNELIZING LINE PER CALTRANS SP A20D DETAIL 38A
4. DOTTED WIDE LINE PER DETAIL ON SHEET MD1
5. LANE LINE EXTENSION PER CALTRANS SP A20D DETAIL 40
6. WHITE LANE LINE PER CALTRANS SP A20A DETAIL 8
7. PAVEMENT MARKING WORDS, WHITE (YIELD) PER CALTRANS SP A24D
8. PAVEMENT MARKING WORDS, WHITE (ONLY) PER CALTRANS SP A24E
9. TYPE IV (L) ARROW PER CALTRANS SP A24A
10. TYPE VII (L) ARROW PER CALTRANS SP A24A
11. TYPE I (10'-0") ARROW PER CALTRANS SP A24A
12. TYPE III (R) ARROW PER CALTRANS SP A24B
13. FISH HOOK ARROW (STRAIGHT-LEFT) PER DETAIL ON SHEET MD1
14. FISH HOOK ARROW (STRAIGHT-RIGHT) PER DETAIL ON SHEET MD1
15. FISH HOOK ARROW (STRAIGHT-RIGHT-LEFT) PER DETAIL ON SHEET MD1
16. FISH HOOK ARROW (LEFT) PER DETAIL ON SHEET MD1
17. 12" BASIC CROSSWALK PAVEMENT MARKING PER CALTRANS SP A24F
18. NOT USED THIS SHEET
19. STOP LINE PER DETAIL ON SHEET MD1
20. NO PASSING ZONE LINE PER CALTRANS SP A20A DETAIL 21
21. NOT USED THIS SHEET

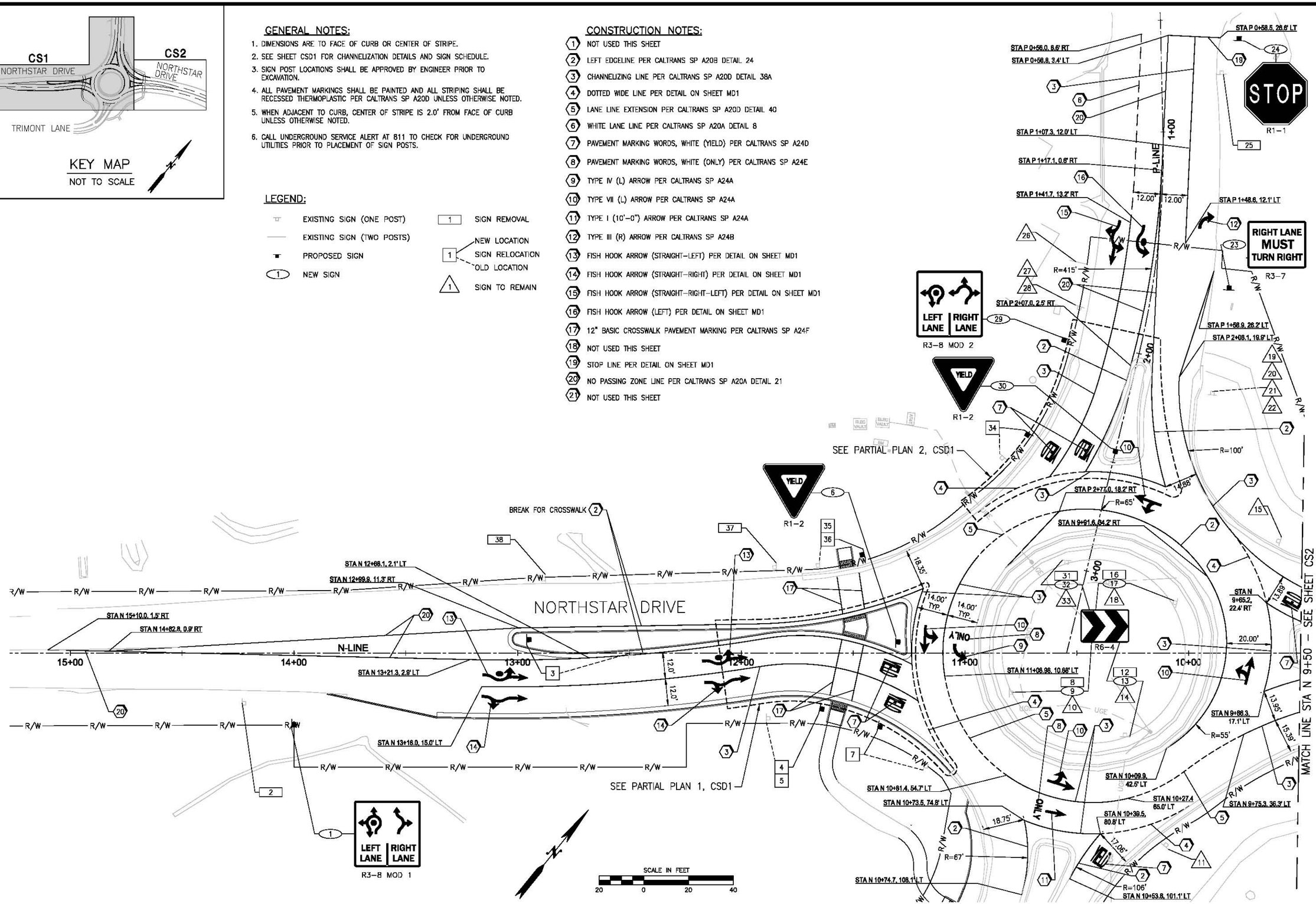

No.	Revision	Description	Date	Approved

THE COUNTY OF PLACER, ITS OFFICERS, OR ITS AGENTS SHALL NOT BE RESPONSIBLE FOR THE ACCURACY OR COMPLETENESS OF ELECTRONIC COPIES OF THIS DOCUMENT.

NORTHSTAR ROUNDABOUT MODIFICATION PROJECT
CHANNELIZATION AND SIGNING PLAN

PLACER COUNTY CALIFORNIA
DEPARTMENT OF PUBLIC WORKS

DATE: 07-18-2013
DESIGN: RP
DRAW: MER
CHECK: KAO

REGISTERED PROFESSIONAL ENGINEER RACHEL S. PRICE C 77191 Exp. 12/31/14 CIVIL STATE OF CALIFORNIA

DATE: 07-19-13

CONSTRUCTION CONTRACT NO. 1158
PROJECT NO. PC2960
SCALE
HORIZ:
VERT:
SCALE REFERENCE 0 — 1"
DRAWING CS1
SHEET NO. 11 OF 13

I:\25\2011\012 Northstar RB\DESIGN\S112-CS1.dwg 7/19/2013 10:30 AM

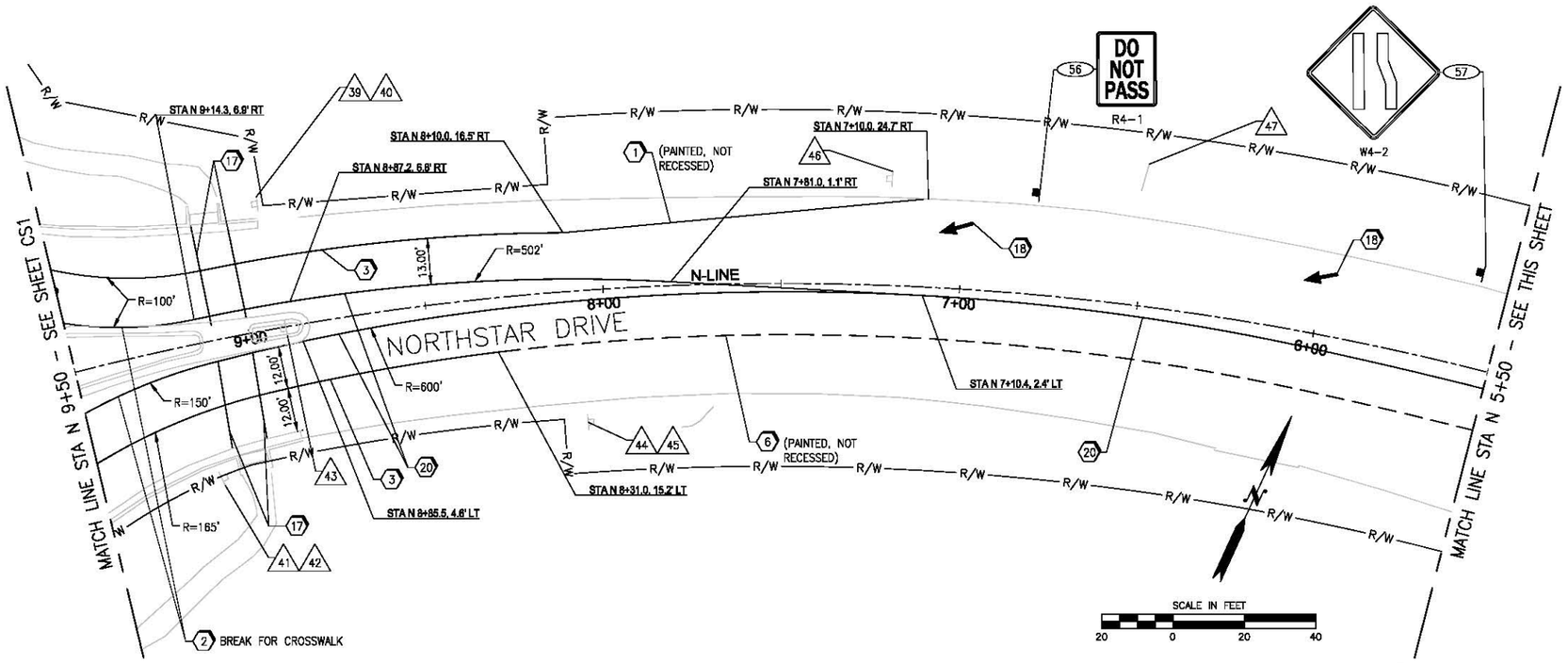

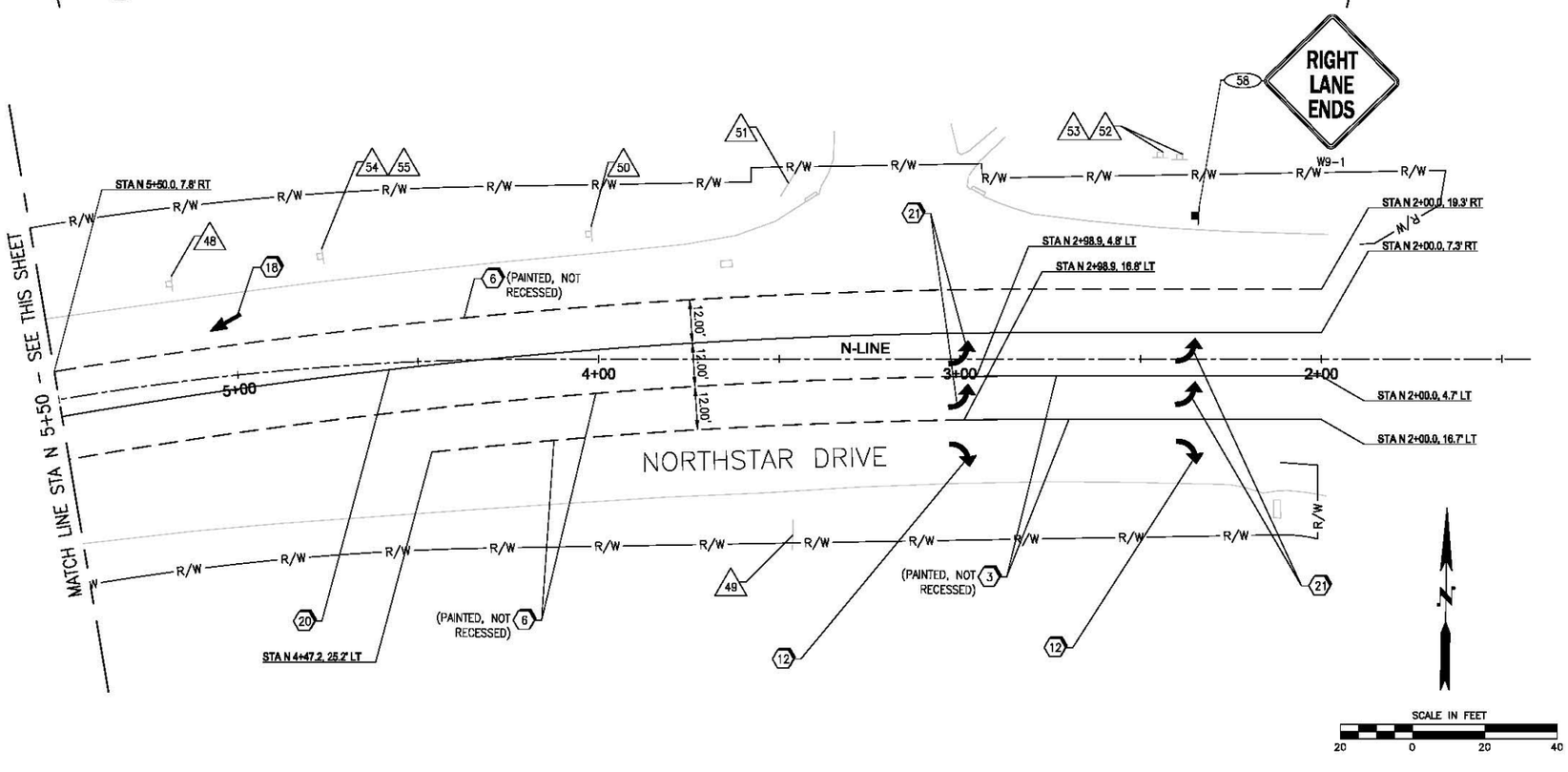

GENERAL NOTES:

1. DIMENSIONS ARE TO FACE OF CURB OR CENTER OF STRIPE.
2. SEE SHEET CSD1 FOR CHANNELIZATION DETAILS AND SIGN SCHEDULE.
3. SIGN POST LOCATIONS SHALL BE APPROVED BY ENGINEER PRIOR TO EXCAVATION.
4. ALL PAVEMENT MARKINGS SHALL BE PAINTED AND ALL STRIPING SHALL BE RECESSED THERMOPLASTIC PER CALTRANS SP A20D UNLESS OTHERWISE NOTED.
5. WHEN ADJACENT TO CURB, CENTER OF STRIPE IS 2.0' FROM FACE OF CURB UNLESS OTHERWISE NOTED.
6. CALL UNDERGROUND SERVICE ALERT AT 811 TO CHECK FOR UNDERGROUND UTILITIES PRIOR TO PLACEMENT OF SIGN POSTS.

LEGEND:

- EXISTING SIGN (ONE POST)
- EXISTING SIGN (TWO POSTS)
- PROPOSED SIGN
- (1) NEW SIGN
- [1] SIGN REMOVAL
- [1] NEW LOCATION / SIGN RELOCATION / OLD LOCATION
- (1) SIGN TO REMAIN

CONSTRUCTION NOTES:

1. RIGHT EDGELINE PER CALTRANS SP A20B DETAIL 27B
2. LEFT EDGELINE PER CALTRANS SP A20B DETAIL 24
3. CHANNELIZING LINE PER CALTRANS SP A20D DETAIL 38A
4. NOT USED THIS SHEET
5. NOT USED THIS SHEET
6. WHITE LANE LINE PER CALTRANS SP A20A DETAIL 8
7. NOT USED THIS SHEET
8. NOT USED THIS SHEET
9. NOT USED THIS SHEET
10. NOT USED THIS SHEET
11. NOT USED THIS SHEET
12. TYPE III (R) ARROW PER CALTRANS SP A24B
13. NOT USED THIS SHEET
14. NOT USED THIS SHEET
15. NOT USED THIS SHEET
16. NOT USED THIS SHEET
17. 12" BASIC CROSSWALK PAVEMENT MARKING PER CALTRANS SP A24F
18. TYPE VI ARROW PER CALTRANS SP A24A
19. NOT USED THIS SHEET
20. NO PASSING ZONE LINE PER CALTRANS SP A20A DETAIL 21
21. TYPE III (L) ARROW PER CALTRANS SP A24B

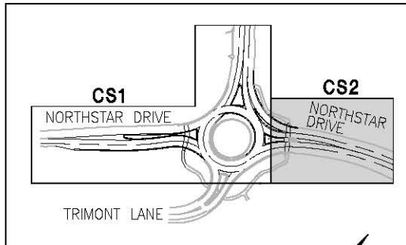

KEY MAP
NOT TO SCALE

No.	Revision	Description	Date	Approved

THE COUNTY OF PLACER, ITS OFFICERS, OR ITS AGENTS SHALL NOT BE RESPONSIBLE FOR THE ACCURACY OR COMPLETENESS OF ELECTRONIC COPIES OF THIS DOCUMENT.

NORTHSTAR ROUNDABOUT MODIFICATION PROJECT
CHANNELIZATION AND SIGNING PLAN

PLACER COUNTY CALIFORNIA
DEPARTMENT OF PUBLIC WORKS

DATE: 07-18-2013
DESIGN: RP
DRAW: MER
CHECK: KAO

REGISTERED PROFESSIONAL ENGINEER RACHEL S. PRICE C 77191 Exp. 12/31/14 CIVIL STATE OF CALIFORNIA
DATE: 07-19-13

CONSTRUCTION CONTRACT NO. 1158
PROJECT NO. PC2960
SCALE
HORIZ:
VERT:
SCALE REFERENCE 0 — 1"
DRAWING CS2
SHEET NO. 12 OF 13

I:\25\2011\012 Northstar RB\DESIGN\5112-CS1.dwg 7/19/2013 10:30 AM

SIGN SCHEDULE

SIGN NO.	STATION	OFFSET	CLEARANCE V (ft.)	SIGN TYPE	SIGN SIZE W (in.)	SIGN SIZE H (in.)	POST INFO SIZE (in.)	POST INFO LENGTH (ft.)	DESCRIPTION	REMARKS
1	N 14+00	32' LT	7	R3-8 MOD 1	42	42	4 x 6	14	LANE DESIGNATION PER MD1	MOUNT NEW SIGN AND POST
2	N 14+22	22' LT	–	W3-2	–	–	–	–	YIELD AHEAD	REMOVE EXISTING SIGN
3	N 12+96	6' RT	–	R4-7	–	–	–	–	STAY RIGHT	RELOCATE EXISTING SIGN
4	N 11+65	25' LT	–	W11-2	–	–	–	–	PEDESTRIAN CROSSING	RELOCATE EXISTING SIGN
5			–	W16-7P	–	–	–	–	DIAGONAL ARROW	RELOCATE EXISTING SIGN
6	N 11+31	5' RT	7	R1-2	36	36	4 x 4	13	YIELD	MOUNT NEW SIGN AND POST
7	N 11+39	33' LT	–	R1-2	–	–	–	–	YIELD	RELOCATE EXISTING SIGN
8	N 10+79	18' LT	–	W1-8A (RT)	–	–	–	–	CHEVRON	REMOVE EXISTING SIGN
9			4	R6-4	30	24	–	–	CHEVRON	MOUNT NEW SIGN ABOVE SIGN #10
10			6	R6-1R	–	–	–	–	ONE WAY	SIGN TO REMAIN
11	N 10+10	86' LT	–	R1-2	–	–	–	–	YIELD	SIGN TO REMAIN
12	N 10+28	37' LT	–	W1-8A (RT)	–	–	–	–	CHEVRON	REMOVE EXISTING SIGN
13			4	R6-4	30	24	–	–	CHEVRON	MOUNT NEW SIGN ABOVE SIGN #14
14			6	R6-1R	–	–	–	–	ONE WAY	SIGN TO REMAIN
15	N 9+59	50' RT	–	R1-2	–	–	–	–	YIELD	SIGN TO REMAIN
16	N 10+06	23' RT	–	W1-8A (RT)	–	–	–	–	CHEVRON	REMOVE EXISTING SIGN
17			4	R6-4	30	24	–	–	CHEVRON	MOUNT NEW SIGN ABOVE SIGN #18
18			6	R6-1R	–	–	–	–	ONE WAY	SIGN TO REMAIN
19	P 2+10	36' LT	–	W11-2	–	–	–	–	PEDESTRIAN CROSSING	SIGN TO REMAIN
20			–	W16-7P	–	–	–	–	DIAGONAL ARROW	SIGN TO REMAIN
21			–	–	–	–	–	–	INFORMATION SIGN	SIGN TO REMAIN
22			–	–	–	–	–	–	INFORMATION SIGN	SIGN TO REMAIN
23	P 1+66	34' LT	7	R3-7	30	30	4 x 4	12	RIGHT LANE TURN RIGHT	MOUNT NEW SIGN AND POST
24	P 0+60	35' LT	7	R1-1	30	30	4 x 4	12	STOP	MOUNT NEW SIGN AND POST
25	P 0+74	27' LT	–	R1-2	–	–	–	–	YIELD	REMOVE EXISTING SIGN
26	P 1+63	34' RT	–	–	–	–	–	–	DIRECTIONAL SIGN	SIGN TO REMAIN
27	P 1+85	30' RT	–	W11-2	–	–	–	–	PEDESTRIAN CROSSING	SIGN TO REMAIN
28			–	W16-7P	–	–	–	–	DIAGONAL ARROW	SIGN TO REMAIN
29	P 2+01	36' RT	7	R3-8 MOD 2	42	42	4 x 6	14	LANE DESIGNATION PER MD1	MOUNT NEW SIGN AND POST
30	P 2+45	0'	7	R1-2	36	36	4 x 4	13	YIELD	MOUNT NEW SIGN AND POST
31	N 10+54	41' RT	–	W1-8A (RT)	–	–	–	–	CHEVRON	REMOVE EXISTING SIGN
32			4	R6-4	30	24	–	–	CHEVRON	MOUNT NEW SIGN ABOVE SIGN #33
33			6	R6-1R	–	–	–	–	ONE WAY	SIGN TO REMAIN
34	P 2+46	40' RT	–	R1-2	–	–	–	–	YIELD	RELOCATE EXISTING SIGN
35	N 11+45	44' RT	–	W11-2	–	–	–	–	PEDESTRIAN CROSSING	RELOCATE EXISTING SIGN
36			–	W16-7P	–	–	–	–	DIAGONAL ARROW	RELOCATE EXISTING SIGN
37	N 11+85	38' RT	–	W4-2	–	–	–	–	LANE ENDS MERGE LEFT	REMOVE EXISTING SIGN
38	N 12+88	33' RT	–	R4-1	–	–	–	–	DO NOT PASS	REMOVE EXISTING SIGN
39	N 8+92	35' RT	–	W11-2	–	–	–	–	PEDESTRIAN CROSSING	SIGN TO REMAIN
40			–	W16-7P	–	–	–	–	DIAGONAL ARROW	SIGN TO REMAIN
41	N 9+15	38' LT	–	W11-2	–	–	–	–	PEDESTRIAN CROSSING	SIGN TO REMAIN
42			–	W16-7P	–	–	–	–	DIAGONAL ARROW	SIGN TO REMAIN
43	N 8+86	5' LT	–	R4-7	–	–	–	–	STAY RIGHT	SIGN TO REMAIN
44	N 8+06	37' LT	–	W3-3	–	–	–	–	SIGNAL	SIGN TO REMAIN
45			–	W3-3A	–	–	–	–	SIGNAL AHEAD	SIGN TO REMAIN
46	N 5+16	27' RT	–	–	–	–	–	–	FIRE STATION AHEAD	SIGN TO REMAIN
47	N 6+52	36' RT	–	–	–	–	–	–	DIRECTIONAL SIGN	SIGN TO REMAIN
48	N 5+16	27' RT	–	–	–	–	–	–	RESORT INFORMATION	SIGN TO REMAIN
49	N 3+46	49' LT	–	–	–	–	–	–	DIRECTIONAL SIGN	SIGN TO REMAIN
50	N 4+03	35' RT	–	W14-2	–	–	–	–	NO OUTLET	SIGN TO REMAIN
51	N 3+47	49' RT	–	–	–	–	–	–	DIRECTIONAL SIGN	SIGN TO REMAIN
52	N 2+45	56' RT	–	–	–	–	–	–	BUSINESS SIGN	SIGN TO REMAIN
53	N 2+39	56' RT	–	–	–	–	–	–	BUSINESS SIGN	SIGN TO REMAIN
54	N 4+75	31' RT	–	W2-6	–	–	–	–	ROUNDABOUT AHEAD	SIGN TO REMAIN
55			–	W13-1	–	–	–	–	15 MPH	SIGN TO REMAIN
56	N 6+80	29' RT	7	R4-1	24	30	4 x 4	12	DO NOT PASS	MOUNT NEW SIGN AND POST
57	N 5+57	29' RT	7	W4-2	36	36	4 x 6	13	LANE ENDS	MOUNT NEW SIGN AND POST
58	N 2+34	43' RT	7	W9-1	36	36	4 x 6	13	RIGHT LANE ENDS	MOUNT NEW SIGN AND POST

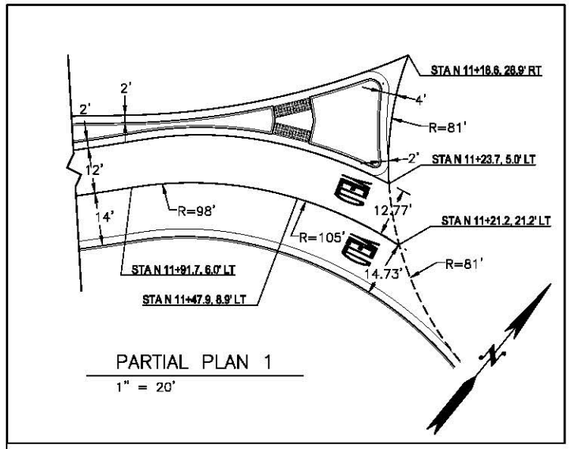

PARTIAL PLAN 1

1" = 20'

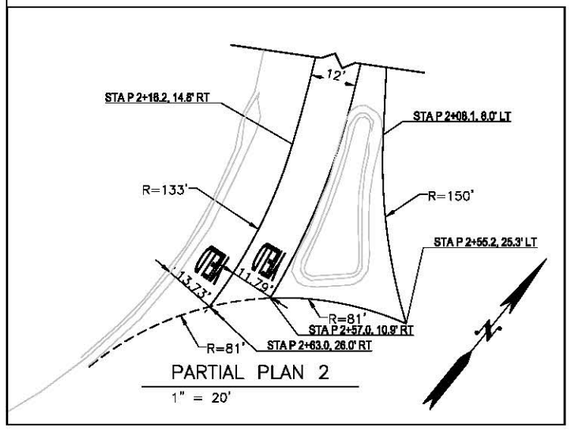

PARTIAL PLAN 2

1" = 20'

No.	Revision Description	Date	Approved

THE COUNTY OF PLACER, ITS OFFICERS, OR ITS AGENTS SHALL NOT BE RESPONSIBLE FOR THE ACCURACY OR COMPLETENESS OF ELECTRONIC COPIES OF THIS DOCUMENT.

NORTHSTAR ROUNDABOUT
MODIFICATION PROJECT
CHANNELIZATION AND SIGNING DETAILS

PLACER COUNTY CALIFORNIA
DEPARTMENT OF PUBLIC WORKS

DATE: 07-18-2013
DESIGN: RP
DRAW: MER
CHECK: KAO

REGISTERED PROFESSIONAL ENGINEER
RACHEL S. PRICE
C 77191
EXP. 12/31/14
CIVIL
STATE OF CALIFORNIA

DATE: 07-19-13

CONSTRUCTION CONTRACT NO.
1158

PROJECT NO.
PC2960

SCALE
HORIZ:
VERT:
SCALE REFERENCE
0 — 1"

DRAWING
CSD1

SHEET NO.
13 OF 13

I:\25\2011\012 Northstar RB\DESIGN\5112-CSD1.dwg 7/19/2013 10:31 AM