ATTACHMENT B

Placer Ranch Wastewater Collection System Model
Detailed Flow Input Tables

Placer Ranch Wastewater Collection System Modeling
Attachment B: Exhibit 1 Dry Weather Flow Inputs

				LOAD 1															LOAD 2						LOAD 3									Offsite Flows			Total						
				LDR (180 GPD / DU)					MDR (180 GPD / DU)					HDR (120 GPD / DU)					CMU (2160 GPD / ACRE)			GC,CP (800 GPD / ACRE)			UZ (UNIVERSITY) (2,304 GPD / ACRE)			PF (PUBLIC FACILITIES) (620 GPD / ACRE)			PARK - Parks > 10 Acres (10 GPD / ACRE)			Load 1 (RES)	Load 2 (Com)	Load 3 (Industrial)	Load 1 (RES)	Load 2 (Com)	Load 3 (Industrial)	TOTAL	TOTAL SEWERED AREA	Dry Weather	Wet Weather
REFERENCE NODE	TRIBUTARY LAND USE PARCELS	CONTRIBUTING NODE	Contributing node not in model		TribArea	DU	Trib DU	Q(ADWF)		TribArea	DU	Trib DU	Q(ADWF)		TribArea	DU	Trib DU	Q(ADWF)	AREA	TribArea	Q(ADWF)	AREA	TribArea	Q(ADWF)	AREA	TribArea	Q(ADWF)	AREA	TribArea	Q(ADWF)	AREA	TribArea	Q(ADWF)	Q(BSF)	Q(BSF)	Q(BSF)	Q(BSF)	Q(BSF)	Q(BSF)	Q(BSF)			
#		#		Acres	Acres		#	MGD	Acres	Acres		#	MGD	Acres	Acres		#	MGD	ACRE	Acres	MGD	ACRE	Acres	MGD	ACRE	Acres	MGD	ACRE	Acres	MGD	ACRE	Acres	MGD	MGD	MGD	MGD	MGD	MGD	MGD	AC	MGD	MGD
500	OFFISTE FLOWS							0.000					0.000					0.000			0.000			0.000			0.000			0.000			0.000	0.000	0.000	0.000	0.000	0.000	0.000	0.000	0.0000	0.0000
600	OFFISTE FLOWS							0.000					0.000					0.000			0.000			0.000			0.000			0.000			0.000	0.000	0.000	0.000	0.000	0.000	0.000	0.000	0.0000	0.0000
700	OFFISTE FLOWS							0.000					0.000					0.000			0.000			0.000			0.000			0.000			0.000	0.000	0.000	0.000	0.000	0.000	0.000	0.000	0.0000	0.0000
400		200		0.0	0.0	0.0	0.0	0.000	0.0	0.0	0.0	0.0	0.000	0.0	0.0	0.0	0.0	0.000	0.0	0.0	0.000	0.0	0.0	0.000	0.0	0.0	0.000	0.0	0.0	0.000	0.0	0.0	0.000				0.000	0.000	0.000	0.000	0.0	0.0000	0.0000
200		202		0.0	0.0	0.0	0.0	0.000	0.0	0.0	0.0	0.0	0.000	0.0	0.0	0.0	0.0	0.000	0.0	0.0	0.000	0.0	0.0	0.000	0.0	0.0	0.000	0.0	0.0	0.000	0.0	0.0	0.000				0.000	0.000	0.000	0.000	0.0	0.0000	0.0000
201	PR-16(LDR), PR-33(MDR)			36.8	36.8	184.0	184.0	0.033	7.9	7.9	63.0	63.0	0.011	0.0	0.0	0.0	0.0	0.000	0.0	0.0	0.000	0.0	0.0	0.000	0.0	0.0	0.000	0.0	0.0	0.000	0.0	0.0	0.000				0.044	0.000	0.000	0.044	44.6	0.0009	0.0089
202		201, 203, 207		0.0	0.0	0.0	0.0	0.000	0.0	0.0	0.0	0.0	0.000	0.0	0.0	0.0	0.0	0.000	0.0	0.0	0.000	0.0	0.0	0.000	0.0	0.0	0.000	0.0	0.0	0.000	0.0	0.0	0.000				0.000	0.000	0.000	0.000	0.0	0.0000	0.0000
203	PR-70(CP), UZ	204		0.0	0.0	0.0	0.0	0.000	0.0	0.0	0.0	0.0	0.000	0.0	0.0	0.0	0.0	0.000	0.0	0.0	0.000	15.5	15.5	0.012	52.7	52.7	0.121	0.0	0.0	0.000	0.0	0.0	0.000				0.000	0.012	0.121	0.134	68.2	0.0014	0.0136
204		205, 500	205	0.0	0.0	0.0	0.0	0.000	0.0	0.0	0.0	0.0	0.000	0.0	0.0	0.0	0.0	0.000	0.0	0.0	0.000	0.0	69.3	0.055	0.0	41.7	0.096	0.0	0.0	0.000	0.0	0.0	0.000				0.000	0.055	0.096	0.152	111.0	0.0022	0.0222
207	PR-95PF	208		0.0	0.0	0.0	0.0	0.000	0.0	0.0	0.0	0.0	0.000	0.0	0.0	0.0	0.0	0.000	0.0	0.0	0.000	0.0	0.0	0.000	0.0	0.0	0.000	0.6	0.6	0.000	0.0	0.0	0.000				0.000	0.000	0.000	0.000	0.0	0.0000	0.0000
208	PR-17(LDR), PR-18(LDR), PR-96PF	209		56.3	56.3	282.0	282.0	0.051	0.0	0.0	0.0	0.0	0.000	0.0	0.0	0.0	0.0	0.000	0.0	0.0	0.000	0.0	0.0	0.000	0.0	0.0	0.000	0.3	0.3	0.000	0.0	0.0	0.000				0.051	0.000	0.000	0.051	56.3	0.0011	0.0113
209	PR-19(LDR), PR-103(PR), UZ	210		30.5	30.5	153.0	153.0	0.028	0.0	0.0	0.0	0.0	0.000	0.0	0.0	0.0	0.0	0.000	0.0	0.0	0.000	0.0	0.0	0.000	69.5	69.5	0.160	0.0	0.0	0.000	4.0	4.0	0.000				0.028	0.000	0.160	0.188	100.0	0.0020	0.0200
210	UZ	211, 216		0.0	0.0	0.0	0.0	0.000	0.0	0.0	0.0	0.0	0.000	0.0	0.0	0.0	0.0	0.000	0.0	0.0	0.000	0.0	0.0	0.000	32.0	32.0	0.074	0.0	0.0	0.000	0.0	0.0	0.000				0.000	0.000	0.074	0.074	32.0	0.0006	0.0064
211	PR-20(LDR), PR-34(MDR)	212	212	27.9	38	139	189	0.034	11.5	48	92	382	0.069		0		0			0						0			0			9.5	0.000				0.103	0.000	0.000	0.103	85.6	0.0017	0.0171
216		217, 219, 226	217, 219	0.0	0.0	0.0	0.0	0.000	0.0	0.0	0.0	0.0	0.000	0.0	21.8	0.0	470.0	0.056	0.0	25.8	0.056	0.0	34.2	0.027	0.0	55.3	0.127	0.0	0.0	0.000	0.0	0.0	0.000				0.056	0.083	0.127	0.267	137.1	0.0027	0.0274
226		225, 227	225	0.0	0	0.0	0	0.000	0.0	0	0.0	0	0.000	0.0	0	0.0	0	0.000	0.0	0	0.000	0.0	0	0.000	0.0	0	0.000	0.0	0	0.000	0.0	4	0.000				0.000	0.000	0.000	0.000	0.0	0.0000	0.0000
227	PR-45(HDR)	228		0.0	0.0	0.0	0.0	0.000	0.0	0.0	0.0	0.0	0.000	7.2	7.2	156.0	156.0	0.019	0.0	0.0	0.000	0.0	0.0	0.000	0.0	0.0	0.000	0.0	0.0	0.000	0.0	0.0	0.000				0.019	0.000	0.000	0.019	7.2	0.0001	0.0014
228		229, 232	229	0.0	0.0	0.0	0.0	0.000	0.0	0.0	0.0	0.0	0.000	0.0	0.0	0.0	0.0	0.000	0.0	7.9	0.017	0.0	23.8	0.019	0.0	0.0	0.000	0.0	0.0	0.000	0.0	0.0	0.000				0.000	0.036	0.000	0.036	31.7	0.0006	0.0063
232	PR-43(HDR)	231, 233	231	0.0	0.0	0.0	0.0	0.000	0.0	0.0	0.0	0.0	0.000	7.2	7.2	155.0	155.0	0.019	0.0	0.0	0.000	0.0	22.1	0.018	0.0	0.0	0.000	0.0	0.0	0.000	0.0	0.0	0.000				0.019	0.018	0.000	0.036	29.3	0.0006	0.0059
233		600		0.0	0.0	0.0	0.0	0.000	0.0	0.0	0.0	0.0	0.000	0.0	0.0	0.0	0.0	0.000	0.0	0.0	0.000	0.0	0.0	0.000	0.0	0.0	0.000	0.0	0.0	0.000	0.0	0.0	0.000				0.000	0.000	0.000	0.000	0.0	0.0000	0.0000
234	PR-84(CP), PR-86(CP), PR-87(CP)	235, 236, 700	235, 236	0.0	0.0	0.0	0.0	0.000	0.0	0.0	0.0	0.0	0.000	0.0	0.0	0.0	0.0	0.000	0.0	0.0	0.000	57.8	145.1	0.116	0.0	0.0	0.000	0.0	0.0	0.000	0.0	0.0	0.000				0.000	0.116	0.000	0.116	145.1	0.0029	0.0290
			Total		161.4		808.0	0.145		55.6		445.0	0.0803		36.2		781.0	0.0937		33.8	0.0729		309.9	0.248		251.2	0.579		0.810	0.0005		17.1	0.0001	0.000	0.000	0.000	0.319	0.321	0.579	1.22	848.1	0.017	0.170

5/16/17 AP

Placer Ranch Wastewater Collection System Modeling
Attachment B: Exhibit 2 Dry Weather Flow Inputs

				LOAD 1															LOAD 2						LOAD 3									Offsite Flows			Total					
REFERENCE NODE	TRIBUTARY LAND USE PARCELS	CONTRIBUTING NODE	Contributing node not in model	LDR (180 GPD / DU)					MDR (180 GPD / DU)					HDR (120 GPD / DU)					CMU (2160 GPD / ACRE)			GC,CP (800 GPD / ACRE)			UZ (UNIVERSITY) (2,304 GPD / ACRE)			PF (PUBLIC FACILITIES) (620 GPD / ACRE)			PARK - Parks > 10 Acres (10 GPD / ACRE)			Load 1 (RES)	Load 2 (Com)	Load 3 (Industrial)	Load 1 (RES)	Load 2 (Com)	Load 3 (Industrial)	TOTAL	TOTAL SEWERED AREA	Dry Weather	Wet Weather
					TribArea	DU	Trib DU	Q(ADWF)		TribArea	DU	Trib DU	Q(ADWF)		TribArea	DU	Trib DU	Q(ADWF)	AREA	TribArea	Q(ADWF)	AREA	TribArea	Q(ADWF)	AREA	TribArea	Q(ADWF)	AREA	TribArea	Q(ADWF)	AREA	TribArea	Q(ADWF)										
#		#		Acres	Acres		#	MGD	Acres	Acres		#	MGD	Acres	Acres		#	MGD	ACRE		MGD	ACRE		MGD	ACRE		MGD	ACRE		MGD	ACRE		MGD	MGD	MGD	MGD	MGD	MGD	MGD	MGD	AC	GWI	GWI
500	OFFISTE FLOWS							0.000					0.000					0.000			0.000			0.000			0.000			0.000			0.000	0.000	0.000	0.000	0.000	0.000	0.000	0.000	0.000	0.0000	0.0000
600	OFFISTE FLOWS							0.000					0.000					0.000			0.000			0.000			0.000			0.000			0.000	0.000	0.000	0.000	0.000	0.000	0.000	0.000	0.000	0.0000	0.0000
700	OFFISTE FLOWS							0.000					0.000					0.000			0.000			0.000			0.000			0.000			0.000	0.000	0.000	0.000	0.000	0.000	0.000	0.000	0.000	0.0000	0.0000
400		LIFT STAION		0.0	0.0	0.0	0.0	0.000	0.0	0.0	0.0	0.0	0.000	0.0	0.0	0.0	0.0	0.000	0.0	0.0	0.000	0.0	0.0	0.000	0.0	0.0	0.000	0.0	0.0	0.000	0.0	0.0	0.000				0.000	0.000	0.000	0.000	0.0	0.0000	0.0000
201	PR-16(LDR), PR-33(MDR)			36.8	36.8	184.0	184.0	0.033	7.9	7.9	63.0	63.0	0.011	0.0	0.0	0.0	0.0	0.000	0.0	0.0	0.000	0.0	0.0	0.000	0.0	0.0	0.000	0.0	0.0	0.000	0.0	0.0	0.000				0.044	0.000	0.000	0.044	44.6	0.0009	0.0089
202		201, 203		0.0	0.0	0.0	0.0	0.000	0.0	0.0	0.0	0.0	0.000	0.0	0.0	0.0	0.0	0.000	0.0	0.0	0.000	0.0	0.0	0.000	0.0	0.0	0.000	0.0	0.0	0.000	0.0	0.0	0.000				0.000	0.000	0.000	0.000	0.0	0.0000	0.0000
203	PR-70(CP), UZ	204		0.0	0.0	0.0	0.0	0.000	0.0	0.0	0.0	0.0	0.000	0.0	0.0	0.0	0.0	0.000	0.0	0.0	0.000	15.5	15.5	0.012	52.7	52.7	0.121	0.0	0.0	0.000	0.0	0.0	0.000				0.000	0.012	0.121	0.134	68.2	0.0014	0.0136
204		205, 500	205	0.0	0.0	0.0	0.0	0.000	0.0	0.0	0.0	0.0	0.000	0.0	0.0	0.0	0.0	0.000	0.0	0.0	0.000	0.0	69.3	0.055	0.0	41.7	0.096	0.0	0.0	0.000	0.0	0.0	0.000				0.000	0.055	0.096	0.152	111.0	0.0022	0.0222
207	PR-95PF	202, 208		0.0	0.0	0.0	0.0	0.000	0.0	0.0	0.0	0.0	0.000	0.0	0.0	0.0	0.0	0.000	0.0	0.0	0.000	0.0	0.0	0.000	0.0	0.0	0.000	0.6	0.6	0.000	0.0	0.0	0.000				0.000	0.000	0.000	0.000	0.0	0.0000	0.0000
208	PR-17(LDR), PR-18(LDR), PR-96PF	209		56.3	56.3	282.0	282.0	0.051	0.0	0.0	0.0	0.0	0.000	0.0	0.0	0.0	0.0	0.000	0.0	0.0	0.000	0.0	0.0	0.000	0.0	0.0	0.000	0.3	0.3	0.000	0.0	0.0	0.000				0.051	0.000	0.000	0.051	56.3	0.0011	0.0113
209	PR-19(LDR), PR-103(PR), UZ	210		30.5	30.5	153.0	153.0	0.028	0.0	0.0	0.0	0.0	0.000	0.0	0.0	0.0	0.0	0.000	0.0	0.0	0.000	0.0	0.0	0.000	69.5	69.5	0.160	0.0	0.0	0.000	4.0	4.0	0.000				0.028	0.000	0.160	0.188	100.0	0.0020	0.0200
210	UZ	211, 216		0.0	0.0	0.0	0.0	0.000	0.0	0.0	0.0	0.0	0.000	0.0	0.0	0.0	0.0	0.000	0.0	0.0	0.000	0.0	0.0	0.000	32.0	32.0	0.074	0.0	0.0	0.000	0.0	0.0	0.000				0.000	0.000	0.074	0.074	32.0	0.0006	0.0064
211	PR-20(LDR), PR-34(MDR)	212	212	27.9	37.9	139.0	189.0	0.034	11.5	47.7	92.0	382.0	0.069		0.0		0.0			0.0			0.0			0.0			0.0			9.5	0.000			0.103	0.000	0.000	0.103	85.6	0.0017	0.0171
216		217, 219, 226	217, 219	0.0	0	0	0	0.000	0.0	0	0	0	0.000	0.0	22	0	470	0.056	0.0	26	0.056	0.0	34	0.027	0.0	55	0.127	0.0	0	0.000	0.0	0.0	0.000				0.056	0.083	0.127	0.267	137.1	0.0027	0.0274
226		225, 227	225	0.0	0.0	0.0	0.0	0.000	0.0	0.0	0.0	0.0	0.000	0.0	0.0	0.0	0.0	0.000	0.0	0.0	0.000	0.0	0.0	0.000	0.0	0.0	0.000	0.0	0.0	0.000	0.0	3.6	0.000				0.000	0.000	0.000	0.000	0.0	0.0000	0.0000
227	PR-45(HDR)	228		0.0	0	0.0	0	0.000	0.0	0	0.0	0	0.000	7.2	7	156.0	156	0.019	0.0	0	0.000	0.0	0	0.000	0.0	0	0.000	0.0	0	0.000	0.0	0	0.000				0.019	0.000	0.000	0.019	7.2	0.0001	0.0014
228		229, 232	229	0.0	0.0	0.0	0.0	0.000	0.0	0.0	0.0	0.0	0.000	0.0	0.0	0.0	0.0	0.000	0.0	7.9	0.017	0.0	23.8	0.019	0.0	0.0	0.000	0.0	0.0	0.000	0.0	0.0	0.000				0.000	0.036	0.000	0.036	31.7	0.0006	0.0063
232	PR-43(HDR)	231, 233	231	0.0	0.0	0.0	0.0	0.000	0.0	0.0	0.0	0.0	0.000	7.2	7.2	155.0	155.0	0.019	0.0	0.0	0.000	0.0	22.1	0.018	0.0	0.0	0.000	0.0	0.0	0.000	0.0	0.0	0.000				0.019	0.018	0.000	0.036	29.3	0.0006	0.0059
233		234, 600, 700		0.0	0.0	0.0	0.0	0.000	0.0	0.0	0.0	0.0	0.000	0.0	0.0	0.0	0.0	0.000	0.0	0.0	0.000	0.0	0.0	0.000	0.0	0.0	0.000	0.0	0.0	0.000	0.0	0.0	0.000				0.000	0.000	0.000	0.000	0.0	0.0000	0.0000
234	PR-84(CP), PR-86(CP), PR-87(CP)	235, 236	235, 236																			57.8	145.1	0.116												0.000	0.116	0.000	0.116	145.1	0.0029	0.0290
			Total		**161.4**		**808.0**	**0.145**		**55.6**		**445.0**	**0.080**		**36.2**		**781.0**	**0.094**		**33.8**	**0.073**		**309.9**	**0.248**		**251.2**	**0.579**		**0.8**	**0.001**		**17.1**	**0.000**				**0.319**	**0.321**	**0.579**	**1.220**	**848.1**	**0.0170**	**0.1696**

Placer Ranch Wastewater Collection System Modeling
Attachment B: Exhibit 3 Dry Weather Flow Inputs

				LOAD 1															LOAD 2						LOAD 3									Offsite Flows			Total						
				LDR (180 GPD / DU)					MDR (180 GPD / DU)					HDR (120 GPD / DU)					CMU (2160 GPD / ACRE)			GC,CP (800 GPD / ACRE)			UZ (UNIVERSITY) (2,304 GPD / ACRE)			PF (PUBLIC FACILITIES) (620 GPD / ACRE)			PARK - Parks > 10 Acres (10 GPD / ACRE)			Load 1 (RES)	Load 2 (Com)	Load 3 (Industrial)	Load 1 (RES)	Load 2 (Com)	Load 3 (Industrial)				
REFERENCE NODE	TRIBUTARY LAND USE PARCELS	CONTRIBUTING NODE	Contributing node not in model		TribArea	DU	Trib DU	Q(ADWF)		TribArea	DU	Trib DU	Q(ADWF)		TribArea	DU	Trib DU	Q(ADWF)	AREA	TribArea	Q(ADWF)	AREA	TribArea	Q(ADWF)	AREA	TribArea	Q(ADWF)	AREA	TribArea	Q(ADWF)	AREA	TribArea	Q(ADWF)	Q(BSF)	Q(BSF)	Q(BSF)	Q(BSF)	Q(BSF)	Q(BSF)	TOTAL	TOTAL SEWERED AREA	Dry Weather	Wet Weather
#		#		Acres	Acres		#	MGD	Acres	Acres		#	MGD	Acres	Acres		#	MGD	ACRE	Acres	MGD	ACRE	Acres	MGD	ACRE	Acres	MGD	ACRE	Acres	MGD	ACRE	Acres	MGD	MGD	MGD	MGD	MGD	MGD	MGD	AC	GWI	GWI
500	OFFISITE FLOWS							0.000					0.000					0.000			0.000			0.000			0.000			0.000			0.000	0.425	1.584	0.390	0.425	1.584	0.390	2.399	1683.0	0.0337	0.3366
600	OFFISITE FLOWS							0.000					0.000					0.000			0.000			0.000			0.000			0.000			0.000	0.053	0.416	0.000	0.053	0.416	0.000	0.469	279.0	0.0056	0.0558
700	OFFISITE FLOWS							0.000					0.000					0.000			0.000			0.000			0.000			0.000			0.000	0.000	0.000	0.254	0.000	0.000	0.254	0.254	317.0	0.0063	0.0634
400		200		0.0	0.0	0.0	0.0	0.000	0.0	0.0	0.0	0.0	0.000	0.0	0.0	0.0	0.0	0.000	0.0	0.0	0.000	0.0	0.0	0.000	0.0	0.0	0.000	0.0	0.0	0.000	0.0	0.0	0.000				0.000	0.000	0.000	0.000	0.0	0.0000	0.0000
200		202		0.0	0.0	0.0	0.0	0.000	0.0	0.0	0.0	0.0	0.000	0.0	0.0	0.0	0.0	0.000	0.0	0.0	0.000	0.0	0.0	0.000	0.0	0.0	0.000	0.0	0.0	0.000	0.0	0.0	0.000				0.000	0.000	0.000	0.000	0.0	0.0000	0.0000
201	PR-16(LDR), PR-33(MDR)			36.8	36.8	184.0	184.0	0.033	7.9	7.9	63.0	63.0	0.011	0.0	0.0	0.0	0.0	0.000	0.0	0.0	0.000	0.0	0.0	0.000	0.0	0.0	0.000	0.0	0.0	0.000	0.0	0.0	0.000				0.044	0.000	0.000	0.044	44.6	0.0009	0.0089
202		201, 203, 207		0.0	0.0	0.0	0.0	0.000	0.0	0.0	0.0	0.0	0.000	0.0	0.0	0.0	0.0	0.000	0.0	0.0	0.000	0.0	0.0	0.000	0.0	0.0	0.000	0.0	0.0	0.000	0.0	0.0	0.000				0.000	0.000	0.000	0.000	0.0	0.0000	0.0000
203	PR-70(CP), UZ	204		0.0	0.0	0.0	0.0	0.000	0.0	0.0	0.0	0.0	0.000	0.0	0.0	0.0	0.0	0.000	0.0	0.0	0.000	15.5	15.5	0.012	52.7	52.7	0.121	0.0	0.0	0.000	0.0	0.0	0.000				0.000	0.012	0.121	0.134	68.2	0.0014	0.0136
204		205, 500	205	0.0	0.0	0.0	0.0	0.000	0.0	0.0	0.0	0.0	0.000	0.0	0.0	0.0	0.0	0.000	0.0	0.0	0.000	0.0	69.3	0.055	0.0	41.7	0.096	0.0	0.0	0.000	0.0	0.0	0.000				0.000	0.055	0.096	0.152	111.0	0.0022	0.0222
207	PR-95PF	208		0.0	0.0	0.0	0.0	0.000	0.0	0.0	0.0	0.0	0.000	0.0	0.0	0.0	0.0	0.000	0.0	0.0	0.000	0.0	0.0	0.000	0.0	0.0	0.000	0.6	0.6	0.000	0.0	0.0	0.000				0.000	0.000	0.000	0.000	0.0	0.0000	0.0000
208	PR-17(LDR), PR-18(LDR), PR-96PF	209		56.3	56.3	282.0	282.0	0.051	0.0	0.0	0.0	0.0	0.000	0.0	0.0	0.0	0.0	0.000	0.0	0.0	0.000	0.0	0.0	0.000	0.0	0.0	0.000	0.3	0.3	0.000	0.0	0.0	0.000				0.051	0.000	0.000	0.051	56.3	0.0011	0.0113
209	PR-19(LDR), PR-103(PR), UZ	210		30.5	30.5	153.0	153.0	0.028	0.0	0.0	0.0	0.0	0.000	0.0	0.0	0.0	0.0	0.000	0.0	0.0	0.000	0.0	0.0	0.000	69.5	69.5	0.160	0.0	0.0	0.000	4.0	4.0	0.000				0.028	0.000	0.160	0.188	100.0	0.0020	0.0200
210	UZ	211, 216		0.0	0.0	0.0	0.0	0.000	0.0	0.0	0.0	0.0	0.000	0.0	0.0	0.0	0.0	0.000	0.0	0.0	0.000	0.0	0.0	0.000	32.0	32.0	0.074	0.0	0.0	0.000	0.0	0.0	0.000				0.000	0.000	0.074	0.074	32.0	0.0006	0.0064
211	PR-20(LDR), PR-34(MDR)	212	212	27.9	38	139	189	0.034	11.5	48	92	382	0.069		0		0			0			0			0			0			9.5	0.000				0.103	0.000	0.000	0.103	85.6	0.0017	0.0171
216		217, 219, 226	217, 219	0.0	0.0	0.0	0.0	0.000	0.0	0.0	0.0	0.0	0.000	0.0	21.8	0.0	470.0	0.056	0.0	25.8	0.056	0.0	34.2	0.027	0.0	55.3	0.127	0.0	0.0	0.000	0.0	0.0	0.000				0.056	0.083	0.127	0.267	137.1	0.0027	0.0274
226		225, 227	225	0.0	0	0.0	0	0.000	0.0	0	0.0	0	0.000	0.0	0	0.0	0	0.000	0.0	0	0.000	0.0	0	0.000	0.0	0	0.000	0.0	0	0.000	0.0	4	0.000				0.000	0.000	0.000	0.000	0.0	0.0000	0.0000
227	PR-45(HDR)	228		0.0	0.0	0.0	0.0	0.000	0.0	0.0	0.0	0.0	0.000	7.2	7.2	156.0	156.0	0.019	0.0	0.0	0.000	0.0	0.0	0.000	0.0	0.0	0.000	0.0	0.0	0.000	0.0	0.0	0.000				0.019	0.000	0.000	0.019	7.2	0.0001	0.0014
228		229, 232	229	0.0	0.0	0.0	0.0	0.000	0.0	0.0	0.0	0.0	0.000	0.0	0.0	0.0	0.0	0.000	0.0	7.9	0.017	0.0	23.8	0.019	0.0	0.0	0.000	0.0	0.0	0.000	0.0	0.0	0.000				0.000	0.036	0.000	0.036	31.7	0.0006	0.0063
232	PR-43(HDR)	231, 233	231	0.0	0.0	0.0	0.0	0.000	0.0	0.0	0.0	0.0	0.000	7.2	7.2	155.0	155.0	0.019	0.0	0.0	0.000	0.0	22.1	0.018	0.0	0.0	0.000	0.0	0.0	0.000	0.0	0.0	0.000				0.019	0.018	0.000	0.036	29.3	0.0006	0.0059
233		600		0.0	0.0	0.0	0.0	0.000	0.0	0.0	0.0	0.0	0.000	0.0	0.0	0.0	0.0	0.000	0.0	0.0	0.000	0.0	0.0	0.000	0.0	0.0	0.000	0.0	0.0	0.000	0.0	0.0	0.000				0.000	0.000	0.000	0.000	0.0	0.0000	0.0000
234	PR-84(CP), PR-86(CP), PR-87(CP)	235, 236, 700	235, 236	0.0	0.0	0.0	0.0	0.000	0.0	0.0	0.0	0.0	0.000	0.0	0.0	0.0	0.0	0.000	0.0	0.0	0.000	57.8	145.1	0.116	0.0	0.0	0.000	0.0	0.0	0.000	0.0	0.0	0.000				0.000	0.116	0.000	0.116	145.1	0.0029	0.0290
			Total		161.4		808.0	0.145		55.6		445.0	0.0803		36.2		781.0	0.0937		33.8	0.0729		309.9	0.248		251.2	0.579		0.810	0.0005		17.1	0.0001	0.478	1.999	0.644	0.798	2.320	1.223	4.34	3127.1	0.063	0.625

Placer Ranch Wastewater Collection System Modeling
Attachment B: Exhibit 4 Dry Weather Flow Inputs

				LOAD 1																LOAD 2						LOAD 3									Offsite Flows			Total						
				LDR (180 GPD / DU)					MDR (180 GPD / DU)					HDR (120 GPD / DU)					CMU (2160 GPD / ACRE)			GC,CP (800 GPD / ACRE)			UZ (UNIVERSITY) (2,304 GPD / ACRE)			PF (PUBLIC FACILITIES) (620 GPD / ACRE)			PARK - Parks > 10 Acres (10 GPD / ACRE)			Load 1 (RES)	Load 2 (Com)	Load 3 (Industrial)	Load 1 (RES)	Load 2 (Com)	Load 3 (Industrial)				
REFERENCE NODE	TRIBUTARY LAND USE PARCELS	CONTRIBUTING NODE	Contributing node not in model		TribArea	DU	Trib DU	Q(ADWF)		TribArea	DU	Trib DU	Q(ADWF)		TribArea	DU	Trib DU	Q(ADWF)	AREA	TribArea	Q(ADWF)	AREA	TribArea	Q(ADWF)	AREA	TribArea	Q(ADWF)	AREA	TribArea	Q(ADWF)	AREA	TribArea	Q(ADWF)	AREA	TribArea	Q(ADWF)	Q(BSF)	Q(BSF)	Q(BSF)	Q(BSF)	Q(BSF)	Q(BSF)	TOTAL	TOTAL SEWERED AREA	Dry Weather GWI	Wet Weather GWI
#		#		Acres	Acres		#	MGD	Acres	Acres		#	MGD	Acres	Acres		#	MGD	ACRE	Acres	MGD	ACRE	Acres	MGD	ACRE	Acres	MGD	ACRE	Acres	MGD	ACRE	Acres	MGD	ACRE	Acres	MGD	MGD	MGD	MGD	MGD	MGD	MGD	MGD	AC	MGD	MGD
500	OFFISTE FLOWS							0.000					0.000					0.000			0.000			0.000			0.000			0.000			0.000			0.425	1.584	0.390	0.425	1.584	0.390	2.399	1683.0	0.0337	0.3366
600	OFFISTE FLOWS							0.000					0.000					0.000			0.000			0.000			0.000			0.000			0.000			0.053	0.416	0.000	0.053	0.416	0.000	0.469	279.0	0.0056	0.0558
700	OFFISTE FLOWS							0.000					0.000					0.000			0.000			0.000			0.000			0.000			0.000			0.000	0.000	0.254	0.000	0.000	0.254	0.254	317.0	0.0063	0.0634
400		200		0.0	0.0	0.0	0.0	0.000	0.0	0.0	0.0	0.0	0.000	0.0	0.0	0.0	0.0	0.000	0.0	0.0	0.000	0.0	0.0	0.000	0.0	0.0	0.000	0.0	0.0	0.000	0.0	0.0	0.000				0.000	0.000	0.000	0.000	0.0	0.0000	0.0000
201	PR-16(LDR), PR-33(MDR)			36.8	36.8	184.0	184.0	0.033	7.9	7.9	63.0	63.0	0.011	0.0	0.0	0.0	0.0	0.000	0.0	0.0	0.000	0.0	0.0	0.000	0.0	0.0	0.000	0.0	0.0	0.000	0.0	0.0	0.000							0.044	0.000	0.000	0.044	44.6	0.0009	0.0089
202		201, 203, 207		0.0	0.0	0.0	0.0	0.000	0.0	0.0	0.0	0.0	0.000	0.0	0.0	0.0	0.0	0.000	0.0	0.0	0.000	0.0	0.0	0.000	0.0	0.0	0.000	0.0	0.0	0.000	0.0	0.0	0.000							0.000	0.000	0.000	0.000	0.0	0.0000	0.0000
203	PR-70(CP), UZ	204		0.0	0.0	0.0	0.0	0.000	0.0	0.0	0.0	0.0	0.000	0.0	0.0	0.0	0.0	0.000	0.0	0.0	0.000	15.5	15.5	0.012	52.7	52.7	0.121	0.0	0.0	0.000	0.0	0.0	0.000							0.000	0.012	0.121	0.134	68.2	0.0014	0.0136
204		205, 500	205	0.0	0.0	0.0	0.0	0.000	0.0	0.0	0.0	0.0	0.000	0.0	0.0	0.0	0.0	0.000	0.0	0.0	0.000	0.0	69.3	0.055	0.0	41.7	0.096	0.0	0.0	0.000	0.0	0.0	0.000							0.000	0.055	0.096	0.152	111.0	0.0022	0.0222
207	PR-95PF	208		0.0	0.0	0.0	0.0	0.000	0.0	0.0	0.0	0.0	0.000	0.0	0.0	0.0	0.0	0.000	0.0	0.0	0.000	0.0	0.0	0.000	0.0	0.0	0.000	0.6	0.6	0.000	0.0	0.0	0.000							0.000	0.000	0.000	0.000	0.0	0.0000	0.0000
208	PR-17(LDR), PR-18(LDR), PR-96PF	209		56.3	56.3	282.0	282.0	0.051	0.0	0.0	0.0	0.0	0.000	0.0	0.0	0.0	0.0	0.000	0.0	0.0	0.000	0.0	0.0	0.000	0.0	0.0	0.000	0.3	0.3	0.000	0.0	0.0	0.000							0.051	0.000	0.000	0.051	56.3	0.0011	0.0113
209	PR-19(LDR), PR-103(PR), UZ	210		30.5	30.5	153.0	153.0	0.028	0.0	0.0	0.0	0.0	0.000	0.0	0.0	0.0	0.0	0.000	0.0	0.0	0.000	0.0	0.0	0.000	69.5	69.5	0.160	0.0	0.0	0.000	4.0	4.0	0.000							0.028	0.000	0.160	0.188	100.0	0.0020	0.0200
210	UZ	211, 216		0.0	0.0	0.0	0.0	0.000	0.0	0.0	0.0	0.0	0.000	0.0	0.0	0.0	0.0	0.000	0.0	0.0	0.000	0.0	0.0	0.000	32.0	32.0	0.074	0.0	0.0	0.000	0.0	0.0	0.000							0.000	0.000	0.074	0.074	32.0	0.0006	0.0064
211	PR-20(LDR), PR-34(MDR)	212	212	27.9	38	139	189	0.034	11.5	48	92	382	0.069		0		0			0			0			0			0			9.5	0.000							0.103	0.000	0.000	0.103	85.6	0.0017	0.0171
216		217, 219, 226	217, 219	0.0	0.0	0.0	0.0	0.000	0.0	0.0	0.0	0.0	0.000	0.0	21.8	0.0	470.0	0.056	0.0	25.8	0.056	0.0	34.2	0.027	0.0	55.3	0.127	0.0	0.0	0.000	0.0	0.0	0.000							0.056	0.083	0.127	0.267	137.1	0.0027	0.0274
226		225, 227	225	0.0	0	0.0	0	0.000	0.0	0	0.0	0	0.000	0.0	0	0.0	0	0.000	0.0	0	0.000	0.0	0	0.000	0.0	0	0.000	0.0	0	0.000	0.0	4	0.000							0.000	0.000	0.000	0.000	0.0	0.0000	0.0000
227	PR-45(HDR)	228		0.0	0.0	0.0	0.0	0.000	0.0	0.0	0.0	0.0	0.000	7.2	7.2	156.0	156.0	0.019	0.0	0.0	0.000	0.0	0.0	0.000	0.0	0.0	0.000	0.0	0.0	0.000	0.0	0.0	0.000							0.019	0.000	0.000	0.019	7.2	0.0001	0.0014
228		229, 232	229	0.0	0.0	0.0	0.0	0.000	0.0	0.0	0.0	0.0	0.000	0.0	0.0	0.0	0.0	0.000	0.0	7.9	0.017	0.0	23.8	0.019	0.0	0.0	0.000	0.0	0.0	0.000	0.0	0.0	0.000							0.000	0.036	0.000	0.036	31.7	0.0006	0.0063
232	PR-43(HDR)	231, 233	231	0.0	0.0	0.0	0.0	0.000	0.0	0.0	0.0	0.0	0.000	7.2	7.2	155.0	155.0	0.019	0.0	0.0	0.000	0.0	22.1	0.018	0.0	0.0	0.000	0.0	0.0	0.000	0.0	0.0	0.000							0.019	0.018	0.000	0.036	29.3	0.0006	0.0059
233		600		0.0	0.0	0.0	0.0	0.000	0.0	0.0	0.0	0.0	0.000	0.0	0.0	0.0	0.0	0.000	0.0	0.0	0.000	0.0	0.0	0.000	0.0	0.0	0.000	0.0	0.0	0.000	0.0	0.0	0.000							0.000	0.000	0.000	0.000	0.0	0.0000	0.0000
234	PR-84(CP), PR-86(CP), PR-87(CP)	235, 236, 700	235, 236	0.0	0.0	0.0	0.0	0.000	0.0	0.0	0.0	0.0	0.000	0.0	0.0	0.0	0.0	0.000	0.0	0.0	0.000	57.8	145.1	0.116	0.0	0.0	0.000	0.0	0.0	0.000	0.0	0.0	0.000							0.000	0.116	0.000	0.116	145.1	0.0029	0.0290
			Total		161.4		808.0	0.145		55.6		445.0	0.0803		36.2		781.0	0.0937		33.8	0.0729		309.9	0.248		251.2	0.579		810	0.0005		17.1	0.0001	0.478	1.999	0.644	0.798	2.320	1.223	4.34	3127.1	0.063	0.625

Placer Ranch Wastewater Collection System Modeling
Attachment B: Exhibit 5 Dry Weather Flow Inputs

				LOAD 1															LOAD 2						LOAD 3									Offsite Flows			Total						
				LDR (180 GPD / DU)					MDR (180 GPD / DU)					HDR (120 GPD / DU)					CMU (2160 GPD / ACRE)			GC,CP (800 GPD / ACRE)			UZ (UNIVERSITY) (2,304 GPD / ACRE)			PF (PUBLIC FACILITIES) (620 GPD / ACRE)			PARK - Parks > 10 Acres (10 GPD / ACRE)			Load 1 (RES)	Load 2 (Com)	Load 3 (Industrial)	Load 1 (RES)	Load 2 (Com)	Load 3 (Industrial)	TOTAL	TOTAL SEWERED AREA	Dry Weather	Wet Weather		TOTAL Q(ADWF + GWI)
REFERENCE NODE	TRIBUTARY LAND USE PARCELS	CONTRIBUTING NODE	Contributing node not in model		TribArea	DU	Trib DU	Q(ADWF)		TribArea	DU	Trib DU	Q(ADWF)		TribArea	DU	Trib DU	Q(ADWF)	AREA	TribArea	Q(ADWF)	AREA	TribArea	Q(ADWF)	AREA	TribArea	Q(ADWF)	AREA	TribArea	Q(ADWF)	AREA	TribArea	Q(ADWF)	Q(BSF)	Q(BSF)	Q(BSF)	Q(BSF)	Q(BSF)	Q(BSF)	Q(BSF)	AC	GWI	GWI	Total GWI	
#		#		Acres	Acres		#	MGD	Acres	Acres		#	MGD	Acres	Acres		#	MGD	ACRE	Acres	MGD	ACRE	Acres	MGD	ACRE	Acres	MGD	ACRE	Acres	MGD	ACRE	Acres	MGD	MGD	MGD	MGD	MGD	MGD	MGD	MGD	MGD	MGD	MGD	MGD
400		200		0.0	0.0	0.0	0.0	0.000	0.0	0.0	0.0	0.0	0.000	0.0	0.0	0.0	0.0	0.000	0.0	0.0	0.000	0.0	0.0	0.000	0.0	0.0	0.000	0.0	0.0	0.000	0.0	0.0	0.000				0.000	0.000	0.000	0.000	0.0	0.000	0.000	0.000
200		202		0.0	0.0	0.0	0.0	0.000	0.0	0.0	0.0	0.0	0.000	0.0	0.0	0.0	0.0	0.000	0.0	0.0	0.000	0.0	0.0	0.000	0.0	0.0	0.000	0.0	0.0	0.000	0.0	0.0	0.000				0.000	0.000	0.000	0.000	0.0	0.000	0.000	0.000
201	PR-16(LDR), PR-33(MDR)			36.8	36.8	184.0	184.0	0.033	7.9	7.9	63.0	63.0	0.011	0.0	0.0	0.0	0.0	0.000	0.0	0.0	0.000	0.0	0.0	0.000	0.0	0.0	0.000	0.0	0.0	0.000	0.0	0.0	0.000				0.044	0.000	0.000	0.044	44.6	0.001	0.009	0.010	0.054
202		201, 203, 207		0.0	0.0	0.0	0.0	0.000	0.0	0.0	0.0	0.0	0.000	0.0	0.0	0.0	0.0	0.000	0.0	0.0	0.000	0.0	0.0	0.000	0.0	0.0	0.000	0.0	0.0	0.000	0.0	0.0	0.000				0.000	0.000	0.000	0.000	0.0	0.000	0.000	0.000
203	PR-70(CP), UZ	204		0.0	0.0	0.0	0.0	0.000	0.0	0.0	0.0	0.0	0.000	0.0	0.0	0.0	0.0	0.000	0.0	0.0	0.000	15.5	15.5	0.012	52.7	52.7	0.121	0.0	0.0	0.000	0.0	0.0	0.000				0.000	0.012	0.121	0.134	68.2	0.001	0.014	0.015	0.149
204		205, 500	205	0.0	0.0	0.0	0.0	0.000	0.0	0.0	0.0	0.0	0.000	0.0	0.0	0.0	0.0	0.000	0.0	0.0	0.000	0.0	69.3	0.055	0.0	41.7	0.096	0.0	0.0	0.000	0.0	0.0	0.000				0.000	0.055	0.096	0.152	111.0	0.002	0.022	0.024	0.176
207	PR-95PF	208		0.0	0.0	0.0	0.0	0.000	0.0	0.0	0.0	0.0	0.000	0.0	0.0	0.0	0.0	0.000	0.0	0.0	0.000	0.0	0.0	0.000	0.0	0.0	0.000	0.6	0.6	0.000	0.0	0.0	0.000				0.000	0.000	0.000	0.000	0.0	0.000	0.000	0.000
208	PR-17(LDR), PR-18(LDR), PR-96PF	209		56.3	56.3	282.0	282.0	0.051	0.0	0.0	0.0	0.0	0.000	0.0	0.0	0.0	0.0	0.000	0.0	0.0	0.000	0.0	0.0	0.000	0.0	0.0	0.000	0.3	0.3	0.000	0.0	0.0	0.000				0.051	0.000	0.000	0.051	56.3	0.001	0.011	0.012	0.063
209	PR-19(LDR), PR-103(PR), UZ	210		30.5	30.5	153.0	153.0	0.028	0.0	0.0	0.0	0.0	0.000	0.0	0.0	0.0	0.0	0.000	0.0	0.0	0.000	0.0	0.0	0.000	69.5	69.5	0.160	0.0	0.0	0.000	4.0	4.0	0.000				0.028	0.000	0.160	0.188	100.0	0.002	0.020	0.022	0.210
210	UZ	211, 216		0.0	0.0	0.0	0.0	0.000	0.0	0.0	0.0	0.0	0.000	0.0	0.0	0.0	0.0	0.000	0.0	0.0	0.000	0.0	0.0	0.000	32.0	32.0	0.074	0.0	0.0	0.000	0.0	0.0	0.000				0.000	0.000	0.074	0.074	32.0	0.001	0.006	0.007	0.081
211	PR-20(LDR), PR-34(MDR)	212	212	27.9	37.9	139.0	189.0	0.034	11.5	87.8	92.0	702.0	0.126	0.0	38.5	0.0	831.0	0.100	0.0	15.1	0.033	0.0	38.0	0.030	0.0	0.0	0.000	0.0	3.9	0.002	0.0	9.5	0.000				0.260	0.063	0.003	0.326	217.3	0.004	0.043	0.048	0.373
216		217, 219, 226	217, 219	0.0	0.0	0.0	0.0	0.000	0.0	0.0	0.0	0.0	0.000	0.0	21.8	0.0	470.0	0.056	0.0	25.8	0.056	0.0	34.2	0.027	0.0	55.3	0.127	0.0	0.0	0.000	0.0	0.0	0.000				0.056	0.083	0.127	0.267	137.1	0.003	0.027	0.030	0.297
226		227, 225	225	0.0	0.0	0.0	0.0	0.000	0.0	0.0	0.0	0.0	0.000	0.0	0.0	0.0	0.0	0.000	0.0	0.0	0.000	0.0	0.0	0.000	0.0	0.0	0.000	0.0	0.0	0.000	0.0	3.6	0.000				0.000	0.000	0.000	0.000	0.0	0.000	0.000	0.000	0.000
227	PR-45(HDR)	228		0.0	0.0	0.0	0.0	0.000	0.0	0.0	0.0	0.0	0.000	7.2	7.2	156.0	156.0	0.019	0.0	0.0	0.000	0.0	0.0	0.000	0.0	0.0	0.000	0.0	0.0	0.000	0.0	0.0	0.000				0.019	0.000	0.000	0.019	7.2	0.000	0.001	0.002	0.020
228		229, 232	229	0.0	0.0	0.0	0.0	0.000	0.0	0.0	0.0	0.0	0.000	0.0	0.0	0.0	0.0	0.000	0.0	7.9	0.017	0.0	23.8	0.019	0.0	0.0	0.000	0.0	0.0	0.000	0.0	0.0	0.000				0.000	0.036	0.000	0.036	31.7	0.001	0.006	0.007	0.043
232	PR-43(HDR)	231, 233	231	0.0	0.0	0.0	0.0	0.000	0.0	0.0	0.0	0.0	0.000	7.2	7.2	155.0	155.0	0.019	0.0	0.0	0.000	0.0	22.1	0.018	0.0	0.0	0.000	0.0	0.0	0.000	0.0	0.0	0.000				0.019	0.018	0.000	0.036	29.3	0.001	0.006	0.006	0.043
233		234		0.0	0.0	0.0	0.0	0.000	0.0	0.0	0.0	0.0	0.000	0.0	0.0	0.0	0.0	0.000	0.0	0.0	0.000	0.0	0.0	0.000	0.0	0.0	0.000	0.0	0.0	0.000	0.0	0.0	0.000				0.000	0.000	0.000	0.000	0.0	0.000	0.000	0.000	0.000
234	PR-84(CP), PR-86(CP), PR-87(CP)	235, 236, 700	235, 236	0.0	0.0	0.0	0.0	0.000	0.0	0.0	0.0	0.0	0.000	0.0	0.0	0.0	0.0	0.000	0.0	0.0	0.000	57.8	145.1	0.116	0.0	0.0	0.000	0.0	0.0	0.000	0.0	0.0	0.000				0.000	0.116	0.000	0.116	145.1	0.003	0.029	0.032	0.148
500	OFF SITE							0.000					0.000					0.000			0.000			0.000			0.000			0.000			0.000	0.000	0.000	0.000	0.000	0.000	0.000	2.399	0.0	0.000	0.000	0.000	2.399
600	OFF SITE							0.000					0.000					0.000			0.000			0.000			0.000			0.000			0.000	0.000	0.000	0.000	0.000	0.000	0.000	0.469	0.0	0.000	0.000	0.000	0.469
700	OFF SITE							0.000					0.000					0.000			0.000			0.000			0.000			0.000			0.000	0.000	0.000	0.000	0.000	0.000	0.000	0.254	0.0	0.000	0.000	0.000	0.254
			Total		161.4		808.0	0.145		95.7		765	0.138		74.63		1612	0.193		48.8	0.105		347.9	0.278		251.2	0.579		4.71	0.003		17.11	0.000				0.477	0.384	0.582	1.442	979.7	0.020	0.196	0.216	1.658

Placer Ranch Wastewater Collection System Modeling
Attachment B: Exhibit 6 Dry Weather Flow Inputs

				LOAD 1																LOAD 2										LOAD 3												Offsite Flows			Total					
				LDR (180 GPD / DU)					MDR (180 GPD / DU)					HDR (120 GPD / DU)					CMU (2160 GPD / ACRE)			GC,CP (800 GPD / ACRE)			UZ (UNIVERSITY) (2,304 GPD / ACRE)			PF (PUBLIC FACILITIES) (620 GPD / ACRE)			PARK - Parks > 10 Acres (10 GPD / ACRE)			Load 1 (RES)	Load 2 (Com)	Load 3 (Industrial)	TOTAL	TOTAL SEWERED AREA	Dry Weather GWI	Wet Weather GWI	Total GWI	TOTAL Q(ADWF + GWI)
REFERENCE NODE	TRIBUTARY LAND USE PARCELS	CONTRIBUTING NODE	Contributing node not in model		TribArea	DU	Trib DU	Q(ADWF)		TribArea	DU	Trib DU	Q(ADWF)		TribArea	DU	Trib DU	Q(ADWF)	AREA	TribArea	Q(ADWF)	AREA	TribArea	Q(ADWF)	AREA	TribArea	Q(ADWF)	AREA	TribArea	Q(ADWF)	AREA	TribArea	Q(ADWF)	Q(BSF)	Q(BSF)	Q(BSF)	Q(BSF)	AC	GWI	GWI		
#		#		Acres	Acres		#	MGD	Acres	Acres		#	MGD	Acres	Acres		#	MGD	ACRE	Acres	MGD	ACRE	Acres	MGD	ACRE	Acres	MGD	ACRE	Acres	MGD	ACRE	Acres	MGD	MGD	MGD	MGD	MGD		MGD	MGD	MGD	MGD	MGD	MGD	MGD	MGD	MGD
200		202		0.0	0.0	0.0	0.0	0.000	0.0	0.0	0.0	0.0	0.000	0.0	0.0	0.0	0.0	0.000	0.0	0.0	0.000	0.0	0.0	0.000	0.0	0.0	0.000	0.0	0.0	0.000	0.0	0.0	0.000				0.000	0.000	0.000	0.000	0.0	0.0000	0.0000	0.0000	0.0000
201	PR-16(LDR), PR-33(MDR)			36.8	36.8	184.0	184.0	0.033	7.9	7.9	63.0	63.0	0.011	0.0	0.0	0.0	0.0	0.000	0.0	0.0	0.000	0.0	0.0	0.000	0.0	0.0	0.000	0.0	0.0	0.000	0.0	0.0	0.000				0.044	0.000	0.000	0.044	44.6	0.0009	0.0089	0.0098	0.0543
202		201, 203, 207		0.0	0.0	0.0	0.0	0.000	0.0	0.0	0.0	0.0	0.000	0.0	0.0	0.0	0.0	0.000	0.0	0.0	0.000	0.0	0.0	0.000	0.0	0.0	0.000	0.0	0.0	0.000	0.0	0.0	0.000				0.000	0.000	0.000	0.000	0.0	0.0000	0.0000	0.0000	0.0000
203	PR-70(CP), UZ	204		0.0	0.0	0.0	0.0	0.000	0.0	0.0	0.0	0.0	0.000	0.0	0.0	0.0	0.0	0.000	0.0	0.0	0.000	15.5	15.5	0.012	52.7	52.7	0.121	0.0	0.0	0.000	0.0	0.0	0.000				0.000	0.012	0.121	0.134	68.2	0.0014	0.0136	0.0150	0.1488
204		205, 500	205	0.0	0.0	0.0	0.0	0.000	0.0	0.0	0.0	0.0	0.000	0.0	0.0	0.0	0.0	0.000	0.0	0.0	0.000	0.0	69.3	0.055	0.0	41.7	0.096	0.0	0.0	0.000	0.0	0.0	0.000				0.000	0.055	0.096	0.152	111.0	0.0022	0.0222	0.0244	0.1759
207	PR-95PF	208		0.0	0.0	0.0	0.0	0.000	0.0	0.0	0.0	0.0	0.000	0.0	0.0	0.0	0.0	0.000	0.0	0.0	0.000	0.0	0.0	0.000	0.0	0.0	0.000	0.6	0.6	0.000	0.0	0.0	0.000				0.000	0.000	0.000	0.000	0.0	0.0000	0.0000	0.0000	0.0003
208	PR-17(LDR), PR-18(LDR), PR-96PF	209		56.3	56.3	282.0	282.0	0.051	0.0	0.0	0.0	0.0	0.000	0.0	0.0	0.0	0.0	0.000	0.0	0.0	0.000	0.0	0.0	0.000	0.0	0.0	0.000	0.3	0.3	0.000	0.0	0.0	0.000				0.051	0.000	0.000	0.051	56.3	0.0011	0.0113	0.0124	0.0633
209	PR-19(LDR), PR-103(PR), UZ	210		30.5	30.5	153.0	153.0	0.028	0.0	0.0	0.0	0.0	0.000	0.0	0.0	0.0	0.0	0.000	0.0	0.0	0.000	0.0	0.0	0.000	69.5	69.5	0.160	0.0	0.0	0.000	4.0	4.0	0.000				0.028	0.000	0.160	0.188	100.0	0.0020	0.0200	0.0220	0.2097
210	UZ	211, 216		0.0	0.0	0.0	0.0	0.000	0.0	0.0	0.0	0.0	0.000	0.0	0.0	0.0	0.0	0.000	0.0	0.0	0.000	0.0	0.0	0.000	32.0	32.0	0.074	0.0	0.0	0.000	0.0	0.0	0.000				0.000	0.000	0.074	0.074	32.0	0.0006	0.0064	0.0070	0.0808
211	PR-20(LDR), PR-34(MDR)	212	212	27.9	37.9	139.0	189.0	0.034	11.5	87.8	92.0	702.0	0.126	0.0	38.5	0.0	831.0	0.100	0.0	15.1	0.033	0.0	38.0	0.030	0.0	0.0	0.000	0.0	3.9	0.002	0.0	9.5	0.000				0.260	0.063	0.003	0.326	217.3	0.0043	0.0435	0.0478	0.3733
216		217, 219, 226	217, 219	0.0	0.0	0.0	0.0	0.000	0.0	0.0	0.0	0.0	0.000	0.0	21.8	0.0	470.0	0.056	0.0	25.8	0.056	0.0	34.2	0.027	0.0	55.3	0.127	0.0	0.0	0.000	0.0	0.0	0.000				0.056	0.083	0.127	0.267	137.1	0.0027	0.0274	0.0302	0.2971
226		227, 225	225	0.0	0.0	0.0	0.0	0.000	0.0	0.0	0.0	0.0	0.000	0.0	0.0	0.0	0.0	0.000	0.0	0.0	0.000	0.0	0.0	0.000	0.0	0.0	0.000	0.0	0.0	0.000	0.0	3.6	0.000				0.000	0.000	0.000	0.000	0.0	0.0000	0.0000	0.0000	0.0000
227	PR-45(HDR)	228		0.0	0.0	0.0	0.0	0.000	0.0	0.0	0.0	0.0	0.000	7.2	7.2	156.0	156.0	0.019	0.0	0.0	0.000	0.0	0.0	0.000	0.0	0.0	0.000	0.0	0.0	0.000	0.0	0.0	0.000				0.019	0.000	0.000	0.019	7.2	0.0001	0.0014	0.0016	0.0203
228		229, 232	229	0.0	0.0	0.0	0.0	0.000	0.0	0.0	0.0	0.0	0.000	0.0	0.0	0.0	0.0	0.000	0.0	7.9	0.017	0.0	23.8	0.019	0.0	0.0	0.000	0.0	0.0	0.000	0.0	0.0	0.000				0.000	0.036	0.000	0.036	31.7	0.0006	0.0063	0.0070	0.0431
232	PR-43(HDR)	231, 233	231	0.0	0.0	0.0	0.0	0.000	0.0	0.0	0.0	0.0	0.000	7.2	7.2	155.0	155.0	0.019	0.0	0.0	0.000	0.0	22.1	0.018	0.0	0.0	0.000	0.0	0.0	0.000	0.0	0.0	0.000				0.019	0.018	0.000	0.036	29.3	0.0006	0.0059	0.0064	0.0427
233		234		0.0	0.0	0.0	0.0	0.000	0.0	0.0	0.0	0.0	0.000	0.0	0.0	0.0	0.0	0.000	0.0	0.0	0.000	0.0	0.0	0.000	0.0	0.0	0.000	0.0	0.0	0.000	0.0	0.0	0.000				0.000	0.000	0.000	0.000	0.0	0.0000	0.0000	0.0000	0.0000
234	PR-84(CP), PR-86(CP), PR-87(CP)	235, 236, 700	235, 236	0.0	0.0	0.0	0.0	0.000	0.0	0.0	0.0	0.0	0.000	0.0	0.0	0.0	0.0	0.000	0.0	0.0	0.000	57.8	145.1	0.116	0.0	0.0	0.000	0.0	0.0	0.000	0.0	0.0	0.000				0.000	0.116	0.000	0.116	145.1	0.0029	0.0290	0.0319	0.1480
500	OFF SITE							0.000					0.000					0.000			0.000			0.000			0.000			0.000			0.000				0.000	0.000	0.000	0.000	0.0	0.0000	0.0000	0.0000	0.0000
600	OFF SITE							0.000					0.000					0.000			0.000			0.000			0.000			0.000			0.000	0.000	0.000	0.000	0.000	0.0	0.0000	0.0000	0.0000	0.0000
700	OFF SITE							0.000					0.000					0.000			0.000			0.000			0.000			0.000			0.000	0.000	0.000	0.000	0.000	0.0	0.0000	0.0000	0.0000	0.0000
			Total		161.4		808.0	0.145		95.7		765	0.138		74.63		1612	0.193		48.8	0.105		347.9	0.278		251.2	0.579		4.71	0.003		17.11	0.000				0.477	0.384	0.582	1.442	979.680	0.020	0.196	0.216	1.658

Placer Ranch Wastewater Collection System Modeling
Attachment B: Exhibit 7 Dry Weather Flow Inputs

				LOAD 1															LOAD 2									LOAD 3											Offsite Flows			Total						
				LDR (180 GPD / DU)					MDR (180 GPD / DU)					HDR (120 GPD / DU)					CMU (2160 GPD / ACRE)			GC,CP (800 GPD / ACRE)			UZ (UNIVERSITY) (2,304 GPD / ACRE)			PF (PUBLIC FACILITIES) (620 GPD / ACRE)			PARK - Parks > 10 Acres (10 GPD / ACRE)			Load 1 (RES)	Load 2 (Com)	Load 3 (Industrial)	Load 1 (RES)	Load 2 (Com)	Load 3 (Industrial)							
REFERENCE NODE	TRIBUTARY LAND USE PARCELS	CONTRIBUTING NODE	Contributing node not in model		TribArea	DU	Trib DU	Q(ADWF)		TribArea	DU	Trib DU	Q(ADWF)		TribArea	DU	Trib DU	Q(ADWF)	AREA	TribArea	Q(ADWF)	AREA	TribArea	Q(ADWF)	AREA	TribArea	Q(ADWF)	AREA	TribArea	Q(ADWF)	AREA	TribArea	Q(ADWF)	Q(BSF)	Q(BSF)	Q(BSF)	Q(BSF)	Q(BSF)	Q(BSF)	TOTAL	TOTAL SEWERED AREA	Dry Weather GWI	Wet Weather GWI	Total GWI	TOTAL Q(ADWF + GWI)
#		#		Acres	Acres		#	MGD	Acres	Acres		#	MGD	Acres	Acres		#	MGD	ACRE	Acres	MGD	ACRE	Acres	MGD	ACRE	Acres	MGD	ACRE	Acres	MGD	ACRE	Acres	MGD	ACRE	Acres	MGD	MGD	MGD	MGD	MGD	MGD	MGD	MGD	AC	MGD	MGD	MGD	MGD
400		200		0.0	0.0	0.0	0.0	0.000	0.0	0.0	0.0	0.0	0.000	0.0	0.0	0.0	0.0	0.000	0.0	0.0	0.000	0.0	0.0	0.000	0.0	0.0	0.000	0.0	0.0	0.000	0.0	0.0	0.000				0.000	0.000	0.000	0.000	0.0	0.0000	0.0000	0.0000	0.0000
200		202		0.0	0.0	0.0	0.0	0.000	0.0	0.0	0.0	0.0	0.000	0.0	0.0	0.0	0.0	0.000	0.0	0.0	0.000	0.0	0.0	0.000	0.0	0.0	0.000	0.0	0.0	0.000	0.0	0.0	0.000				0.000	0.000	0.000	0.000	0.0	0.0000	0.0000	0.0000	0.0000
201	PR-16(LDR), PR-33(MDR)			36.8	36.8	184.0	184.0	0.033	7.9	7.9	63.0	63.0	0.011	0.0	0.0	0.0	0.0	0.000	0.0	0.0	0.000	0.0	0.0	0.000	0.0	0.0	0.000	0.0	0.0	0.000	0.0	0.0	0.000				0.044	0.000	0.000	0.044	44.6	0.0089	0.0089	0.0098	0.0543
202		201, 203, 207		0.0	0.0	0.0	0.0	0.000	0.0	0.0	0.0	0.0	0.000	0.0	0.0	0.0	0.0	0.000	0.0	0.0	0.000	0.0	0.0	0.000	0.0	0.0	0.000	0.0	0.0	0.000	0.0	0.0	0.000				0.000	0.000	0.000	0.000	0.0	0.0000	0.0000	0.0000	0.0000
203	PR-70(CP), UZ	204		0.0	0.0	0.0	0.0	0.000	0.0	0.0	0.0	0.0	0.000	0.0	0.0	0.0	0.0	0.000	0.0	0.0	0.000	15.5	15.5	0.012	52.7	52.7	0.121	0.0	0.0	0.000	0.0	0.0	0.000				0.000	0.012	0.121	0.134	68.2	0.0014	0.0136	0.0150	0.1488
204		205, 500	205	0.0	0.0	0.0	0.0	0.000	0.0	0.0	0.0	0.0	0.000	0.0	0.0	0.0	0.0	0.000	0.0	0.0	0.000	0.0	69.3	0.055	0.0	41.7	0.096	0.0	0.0	0.000	0.0	0.0	0.000				0.000	0.055	0.096	0.152	111.0	0.0022	0.0222	0.0244	0.1759
207	PR-95PF	208		0.0	0.0	0.0	0.0	0.000	0.0	0.0	0.0	0.0	0.000	0.0	0.0	0.0	0.0	0.000	0.0	0.0	0.000	0.0	0.0	0.000	0.0	0.0	0.000	0.6	0.6	0.000	0.0	0.0	0.000				0.000	0.000	0.000	0.000	0.0	0.0000	0.0000	0.0000	0.0003
208	PR-17(LDR), PR-18(LDR), PR-96PF	209		56.3	56.3	282.0	282.0	0.051	0.0	0.0	0.0	0.0	0.000	0.0	0.0	0.0	0.0	0.000	0.0	0.0	0.000	0.0	0.0	0.000	0.0	0.0	0.000	0.3	0.3	0.000	0.0	0.0	0.000				0.051	0.000	0.000	0.051	56.3	0.0011	0.0113	0.0124	0.0633
209	PR-19(LDR), PR-103(PR), UZ	210		30.5	30.5	153.0	153.0	0.028	0.0	0.0	0.0	0.0	0.000	0.0	0.0	0.0	0.0	0.000	0.0	0.0	0.000	0.0	0.0	0.000	69.5	69.5	0.160	0.0	0.0	0.000	4.0	4.0	0.000				0.028	0.000	0.160	0.188	100.0	0.0020	0.0200	0.0220	0.2097
210		UZ	211, 216	0.0	0.0	0.0	0.0	0.000	0.0	0.0	0.0	0.0	0.000	0.0	0.0	0.0	0.0	0.000	0.0	0.0	0.000	0.0	0.0	0.000	32.0	32.0	0.074	0.0	0.0	0.000	0.0	0.0	0.000				0.000	0.000	0.074	0.074	32.0	0.0006	0.0064	0.0070	0.0808
211	PR-20(LDR), PR-34(MDR)	212	212	27.9	37.9	139.0	189.0	0.034	11.5	87.8	92.0	702.0	0.126	0.0	38.5	0.0	831.0	0.100	0.0	15.1	0.033	0.0	38.0	0.030	0.0	0.0	0.000	0.0	3.9	0.002	0.0	9.5	0.000				0.260	0.063	0.003	0.326	217.3	0.0043	0.0435	0.0478	0.3733
216		217, 219, 226	217, 219	0.0	0.0	0.0	0.0	0.000	0.0	0.0	0.0	0.0	0.000	0.0	21.8	0.0	470.0	0.056	0.0	25.8	0.056	0.0	34.2	0.027	0.0	55.3	0.127	0.0	0.0	0.000	0.0	0.0	0.000				0.056	0.083	0.127	0.267	137.1	0.0027	0.0274	0.0302	0.2971
226		227, 225	225	0.0	0.0	0.0	0.0	0.000	0.0	0.0	0.0	0.0	0.000	0.0	0.0	0.0	0.0	0.000	0.0	0.0	0.000	0.0	0.0	0.000	0.0	0.0	0.000	0.0	0.0	0.000	0.0	3.6	0.000				0.000	0.000	0.000	0.000	0.0	0.0000	0.0000	0.0000	0.0000
227	PR-45(HDR)	228		0.0	0.0	0.0	0.0	0.000	0.0	0.0	0.0	0.0	0.000	7.2	7.2	156.0	156.0	0.019	0.0	0.0	0.000	0.0	0.0	0.000	0.0	0.0	0.000	0.0	0.0	0.000	0.0	0.0	0.000				0.019	0.000	0.000	0.019	7.2	0.0001	0.0014	0.0016	0.0203
228		229, 232	229	0.0	0.0	0.0	0.0	0.000	0.0	0.0	0.0	0.0	0.000	0.0	0.0	0.0	0.0	0.000	0.0	7.9	0.017	0.0	23.8	0.019	0.0	0.0	0.000	0.0	0.0	0.000	0.0	0.0	0.000				0.000	0.036	0.000	0.036	31.7	0.0006	0.0063	0.0070	0.0431
232	PR-43(HDR)	231, 233	231	0.0	0.0	0.0	0.0	0.000	0.0	0.0	0.0	0.0	0.000	7.2	7.2	155.0	155.0	0.019	0.0	0.0	0.000	0.0	22.1	0.018	0.0	0.0	0.000	0.0	0.0	0.000	0.0	0.0	0.000				0.019	0.018	0.000	0.036	29.3	0.0006	0.0059	0.0064	0.0427
233		234		0.0	0.0	0.0	0.0	0.000	0.0	0.0	0.0	0.0	0.000	0.0	0.0	0.0	0.0	0.000	0.0	0.0	0.000	0.0	0.0	0.000	0.0	0.0	0.000	0.0	0.0	0.000	0.0	0.0	0.000				0.000	0.000	0.000	0.000	0.0	0.0000	0.0000	0.0000	0.0000
234	PR-84(CP), PR-86(CP), PR-87(CP)	235, 236, 700	235, 236	0.0	0.0	0.0	0.0	0.000	0.0	0.0	0.0	0.0	0.000	0.0	0.0	0.0	0.0	0.000	0.0	0.0	0.000	57.8	145.1	0.116	0.0	0.0	0.000	0.0	0.0	0.000	0.0	0.0	0.000				0.000	0.116	0.000	0.116	145.1	0.0029	0.0290	0.0319	0.1480
500	OFF SITE							0.000					0.000					0.000			0.000			0.000			0.000			0.000			0.000			0.425	1.584	0.390	0.425	1.584	0.390	2.399	1683.0	0.0337	0.3366	0.3703	2.7688
600	OFF SITE							0.000					0.000					0.000			0.000			0.000			0.000			0.000			0.000	0.053	0.416	0.000	0.053	0.416	0.000	0.469	279.0	0.0056	0.0558	0.0614	0.5306
700	OFF SITE							0.000					0.000					0.000			0.000			0.000			0.000			0.000			0.000	0.000	0.000	0.254	0.000	0.000	0.254	0.254	317.0	0.0063	0.0634	0.0697	0.3233
			Total		161.4		808.0	0.145		95.7		765	0.138		74.63		1612	0.193		48.8	0.105		347.9	0.278		251.2	0.579		4.71	0.003		17.11	0.000				0.955	2.383	1.225	4.564	3258.680	0.065	0.652	0.717	5.280

Placer Ranch Wastewater Collection System Modeling
Attachment B: Exhibit 8 Dry Weather Flow Inputs

				LOAD 1																LOAD 2						LOAD 3									Offsite Flows			Total						
				LDR (180 GPD / DU)					MDR (180 GPD / DU)					HDR (120 GPD / DU)					CMU (2160 GPD / ACRE)			GC,CP (800 GPD / ACRE)			UZ (UNIVERSITY) (2,304 GPD / ACRE)			PF (PUBLIC FACILITIES) (620 GPD / ACRE)			PARK - Parks > 10 Acres (10 GPD / ACRE)			Load 1 (RES)	Load 2 (Com)	Load 3 (Industrial)	Load 1 (RES)	Load 2 (Com)	Load 3 (Industrial)						
REFERENCE NODE	TRIBUTARY LAND USE PARCELS	CONTRIBUTING NODE	Contributing node not in model		TribArea	DU	Trib DU	Q(ADWF)		TribArea	DU	Trib DU	Q(ADWF)		TribArea	DU	Trib DU	Q(ADWF)	AREA	TribArea	Q(ADWF)	AREA	TribArea	Q(ADWF)	AREA	TribArea	Q(ADWF)	AREA	TribArea	Q(ADWF)	AREA	TribArea	Q(ADWF)	Q(BSF)	Q(BSF)	Q(BSF)	Q(BSF)	Q(BSF)	Q(BSF)	TOTAL	TOTAL SEWERED AREA	Dry Weather GWI	Wet Weather GWI	Total GWI	TOTAL Q(ADWF + GWI)
#		#		Acres	Acres		#	MGD	Acres	Acres		#	MGD	Acres	Acres		#	MGD	ACRE	Acres	MGD	ACRE	Acres	MGD	ACRE	Acres	MGD	ACRE	Acres	MGD	ACRE	Acres	MGD	ACRE	Acres	MGD	MGD	MGD	MGD	MGD	MGD	MGD	AC	MGD	MGD	MGD	MGD
400		200		0.0	0.0	0.0	0.0	0.000	0.0	0.0	0.0	0.0	0.000	0.0	0.0	0.0	0.0	0.000	0.0	0.0	0.000	0.0	0.0	0.000	0.0	0.0	0.000	0.0	0.0	0.000	0.0	0.0	0.000				0.000	0.000	0.000	0.000	0.0	0.0000	0.0000	0.0000	0.0000
201	PR-16(LDR), PR-33(MDR)			36.8	36.8	184.0	184.0	0.033	7.9	7.9	63.0	63.0	0.011	0.0	0.0	0.0	0.0	0.000	0.0	0.0	0.000	0.0	0.0	0.000	0.0	0.0	0.000	0.0	0.0	0.000	0.0	0.0	0.000				0.044	0.000	0.000	0.044	44.6	0.0009	0.0089	0.0098	0.0543
202		201, 203		0.0	0.0	0.0	0.0	0.000	0.0	0.0	0.0	0.0	0.000	0.0	0.0	0.0	0.0	0.000	0.0	0.0	0.000	0.0	0.0	0.000	0.0	0.0	0.000	0.0	0.0	0.000	0.0	0.0	0.000				0.000	0.000	0.000	0.000	0.0	0.0000	0.0000	0.0000	0.0000
203	PR-70(CP), UZ	204		0.0	0.0	0.0	0.0	0.000	0.0	0.0	0.0	0.0	0.000	0.0	0.0	0.0	0.0	0.000	0.0	0.0	0.000	15.5	15.5	0.012	52.7	52.7	0.121	0.0	0.0	0.000	0.0	0.0	0.000				0.000	0.012	0.121	0.134	68.2	0.0014	0.0136	0.0150	0.1488
204		205, 500	205	0.0	0.0	0.0	0.0	0.000	0.0	0.0	0.0	0.0	0.000	0.0	0.0	0.0	0.0	0.000	0.0	0.0	0.000	0.0	69.3	0.055	0.0	41.7	0.096	0.0	0.0	0.000	0.0	0.0	0.000				0.000	0.055	0.096	0.152	111.0	0.0022	0.0222	0.0244	0.1759
207	PR-95PF	202, 208		0.0	0.0	0.0	0.0	0.000	0.0	0.0	0.0	0.0	0.000	0.0	0.0	0.0	0.0	0.000	0.0	0.0	0.000	0.0	0.0	0.000	0.0	0.0	0.000	0.6	0.6	0.000	0.0	0.0	0.000				0.000	0.000	0.000	0.000	0.0	0.0000	0.0000	0.0000	0.0003
208	7(LDR), PR-18(LDR), PR-	209		56.3	56.3	282.0	282.0	0.051	0.0	0.0	0.0	0.0	0.000	0.0	0.0	0.0	0.0	0.000	0.0	0.0	0.000	0.0	0.0	0.000	0.0	0.0	0.000	0.3	0.3	0.000	0.0	0.0	0.000				0.051	0.000	0.000	0.051	56.3	0.0011	0.0113	0.0124	0.0633
209	PR-19(LDR), PR-103(PR), UZ	210		30.5	30.5	153.0	153.0	0.028	0.0	0.0	0.0	0.0	0.000	0.0	0.0	0.0	0.0	0.000	0.0	0.0	0.000	0.0	0.0	0.000	69.5	69.5	0.160	0.0	0.0	0.000	4.0	4.0	0.000				0.028	0.000	0.160	0.188	100.0	0.0020	0.0200	0.0220	0.2097
210	UZ	211, 216		0.0	0.0	0.0	0.0	0.000	0.0	0.0	0.0	0.0	0.000	0.0	0.0	0.0	0.0	0.000	0.0	0.0	0.000	0.0	0.0	0.000	32.0	32.0	0.074	0.0	0.0	0.000	0.0	0.0	0.000				0.000	0.000	0.074	0.074	32.0	0.0006	0.0064	0.0070	0.0808
211	PR-20(LDR), PR-34(MDR)	212	212	27.9	37.9	139.0	189.0	0.034	11.5	87.8	92.0	702.0	0.126	0.0	38.5	0.0	831.0	0.100	0.0	15.1	0.033	0.0	38.0	0.030	0.0	0.0	0.000	0.0	3.9	0.002	0.0	9.5	0.000				0.260	0.063	0.003	0.326	217.3	0.0043	0.0435	0.0478	0.3733
216		217, 219, 226	217, 219	0.0	0.0	0.0	0.0	0.000	0.0	0.0	0.0	0.0	0.000	0.0	21.8	0.0	470.0	0.056	0.0	25.8	0.056	0.0	34.2	0.027	0.0	55.3	0.127	0.0	0.0	0.000	0.0	0.0	0.000				0.056	0.083	0.127	0.267	137.1	0.0027	0.0274	0.0302	0.2971
226		227, 225	225	0.0	0.0	0.0	0.0	0.000	0.0	0.0	0.0	0.0	0.000	0.0	0.0	0.0	0.0	0.000	0.0	0.0	0.000	0.0	0.0	0.000	0.0	0.0	0.000	0.0	0.0	0.000	0.0	3.6	0.000				0.000	0.000	0.000	0.000	0.0	0.0000	0.0000	0.0000	0.0000
227	PR-45(HDR)	228		0.0	0.0	0.0	0.0	0.000	0.0	0.0	0.0	0.0	0.000	7.2	7.2	156.0	156.0	0.019	0.0	0.0	0.000	0.0	0.0	0.000	0.0	0.0	0.000	0.0	0.0	0.000	0.0	0.0	0.000				0.019	0.000	0.000	0.019	7.2	0.0001	0.0014	0.0016	0.0203
228		229, 232	229	0.0	0.0	0.0	0.0	0.000	0.0	0.0	0.0	0.0	0.000	0.0	0.0	0.0	0.0	0.000	0.0	7.9	0.017	0.0	23.8	0.019	0.0	0.0	0.000	0.0	0.0	0.000	0.0	0.0	0.000				0.000	0.036	0.000	0.036	31.7	0.0006	0.0063	0.0070	0.0431
232	PR-43(HDR)	231, 233	231	0.0	0.0	0.0	0.0	0.000	0.0	0.0	0.0	0.0	0.000	7.2	7.2	155.0	155.0	0.019	0.0	0.0	0.000	0.0	22.1	0.018	0.0	0.0	0.000	0.0	0.0	0.000	0.0	0.0	0.000				0.019	0.018	0.000	0.036	29.3	0.0006	0.0059	0.0064	0.0427
233		234, 600		0.0	0.0	0.0	0.0	0.000	0.0	0.0	0.0	0.0	0.000	0.0	0.0	0.0	0.0	0.000	0.0	0.0	0.000	0.0	0.0	0.000	0.0	0.0	0.000	0.0	0.0	0.000	0.0	0.0	0.000				0.000	0.000	0.000	0.000	0.0	0.0000	0.0000	0.0000	0.0000
234	84(CP), PR-86(CP), PR-87(	235, 236, 700	235, 236	0.0	0.0	0.0	0.0	0.000	0.0	0.0	0.0	0.0	0.000	0.0	0.0	0.0	0.0	0.000	0.0	0.0	0.000	57.8	145.1	0.116	0.0	0.0	0.000	0.0	0.0	0.000	0.0	0.0	0.000				0.000	0.116	0.000	0.116	145.1	0.0029	0.0290	0.0319	0.1480
500	OFF SITE							0.000					0.000					0.000			0.000			0.000			0.000			0.000			0.000			0.425	1.584	0.390	0.425	1.584	0.390	2.399	1683.0	0.0337	0.3366	0.3703	2.7688
600	OFF SITE							0.000					0.000					0.000			0.000			0.000			0.000			0.000			0.000	0.053	0.416	0.000	0.053	0.416	0.000	0.469	279.0	0.0056	0.0558	0.0614	0.5306
700	OFF SITE							0.000					0.000					0.000			0.000			0.000			0.000			0.000			0.000	0.000	0.000	0.254	0.000	0.000	0.254	0.254	317.0	0.0063	0.0634	0.0697	0.3233
			Total		161.4		808.0	0.145		95.7		765	0.138		74.63		1612	0.193		48.8	0.105		347.9	0.278		251.2	0.579		4.71	0.003		17.11	0.000	0.478	1.999	0.644	0.955	2.383	1.225	4.564	3258.680	0.065	0.652	0.717	5.280

Placer Ranch Wastewater Collection System Modeling
Attachment B: West Placer Ranch Dry Weather Flow Inputs

				LOAD 1														LOAD 2						LOAD 3															
REFERENCE NODE	TRIBUTARY LAND USE PARCELS	CONTRIBUTING NODE	Contributing node not in model	LDR (180 GPD / DU)					MDR (180 GPD / DU)					HDR (120 GPD / DU)					CMU (2160 GPD / ACRE)			GC,CP (800 GPD / ACRE)			PF (School) (160 GPD / AC)			PF (PUBLIC FACILITIES) (620 GPD / ACRE)			PARK - Parks > 10 Acres (10 GPD / ACRE)			Load 1 (RES)	Load 2 (Com)	Load 3 (Industrial)	TOTAL	TOTAL SEWERED AREA	Dry Weather	ADWF	Wet Weather		TOTAL
					TribArea	DU	Trib DU	Q(ADWF)		TribArea	DU	Trib DU	Q(ADWF)		TribArea	DU	Trib DU	Q(ADWF)	AREA	TribArea	Q(ADWF)	AREA	TribArea	Q(ADWF)	AREA	TribArea	Q(ADWF)	AREA	TribArea	Q(ADWF)	AREA	TribArea	Q(ADWF)									
#		#		Acres	Acres		#	MGD	Acres	Acres		#	MGD	Acres	Acres		#	MGD	ACRE	Acres	MGD	ACRE	Acres	MGD	ACRE	Acres	MGD	ACRE	Acres	MGD	ACRE	Acres	MGD	MGD	MGD	MGD	MGD	AC	GWI	MGD	GWI	Total GWI	MGD
101	PR-93(PF-LS)	102, 125	102, 125	0.0	377.5	0.0	1887.0	0.340	0.0	36.6	0.0	292.0	0.053	0.0	18.4	0.0	397.0	0.048	0.0	0.0	0.000	0.0	73.2	0.059	0.0	32.0	0.005	0.5	0.8	0.000	0.0	37.8	0.000	0.440	0.059	0.006	0.504	537.6	0.0108	0.515	0.1075	0.1183	0.6227
			Total		377.5		1887.0	0.340		36.58		292	0.053		18.39		397	0.048		0	0.000		73.23	0.059		31.96	0.005		0.77	0.000		37.79	0.000	0.440	0.059	0.006	0.504	537.6	0.0108		0.1075	0.1183	0.6227

Placer Ranch Wastewater Collection System Modeling
Attachment B: Offsite Dry Weather Flow Inputs

	Acres	DUs	Generation Rate (gpd/acre) or (gpd/DU)	ADWF (mgd)	Category (RES/COM/ LI)	Load #
PR-POC 1 MH 500						
Innovation Center West	818		800	0.65	COM	2
Residential	145	1,615	180	0.29	RES	1
Eco-Industrial	200		800	0.16	LI	3
EDUs		200	180	0.04	RES	1
Innovation Center East	155		800	0.12	COM	2
Residential	27	301	180	0.05	RES	1
Entertainment Mixed Use	257		2,160	0.56	COM	2
Residential	34	245	180	0.04	RES	1
Casino[2]	47		-	0.25	COM	2
L270[2]	-		-	0.23	LI	3
Total PR-POC 1	**1,683**	**2,361**		**2.40**		
PR-POC 2 MH 600						
Innovation Center East	85		800	0.07	COM	2
Residential	15	167	180	0.03	RES	1
Entertainment Mixed Use	161		2,160	0.35	COM	2
Residential	18	130	180	0.02	RES	1
Total PR-POC 2	**261**	**297**		**0.47**		
PR-POC 3 MH 700						
Business Park	114		800	0.09	LI	3
Light Industrial	203		800	0.16	LI	3
Total PR-POC 3	**317**	**0**		**0.25**		
TOTAL	**2,261**	**2,658**		**3.12**		

1) Peaking Factor was determined by the SPWA Design Peaking Factor Curve from TM 3a.
2) ADWF from Athens Ave. Sewer Study.
Innovation Center = commercial mixed-use/workforce housing

MH	Load 1	Load 2	Load 3	Total BSF	Acres	Dry Weather GWI (mgd)	Wet Weather GWI (mgd)
500	0.425	1.584	0.390	2.40	1,683	0.03366	0.3366
600	0.053	0.416		0.47	279	0.00558	0.0558
700			0.254	0.25	317	0.00634	0.0634
				3.12	2,279	0.046	0.456

Offsite Unit Flow Factors

Residential	RES	180	GPD/DU	1
Entertainment Mixed Use	COM	2160	GPD/ACRE	2
Innovation Center East and West, Eco-Indu	COM	800	GPD/ACRE	2
Casino, L270	COM	-		2
Business Park, Light Industrial	LI	800	GPD/ACRE	3
Casino, L270	COM	-		

ATTACHMENT C

Placer Ranch Wastewater Collection System Model
Detailed Model Results Tables

Placer Ranch Sewer Model
Pipe Results Exhibit 1

Pipe ID	US MH	DS MH	US INV	DS INV	Diam (in)	Length (ft)	Slope	PWWF (mgd)	Froude Number	Water Depth (ft)	Velocity (ft/s)	d/D	q/Q
15	200	400	84.25	81.26	27	4274	0.0007	3.51	0.38	1.33	2.22	0.59	0.66
28	216	210	97.97	97.28	18	1392	0.0005	1.00	0.31	0.89	1.42	0.59	0.66
31	207	202	93.56	92.88	21	799	0.0009	1.84	0.42	0.99	2.03	0.57	0.62
32	208	207	94.18	93.66	21	611	0.0009	1.84	0.42	0.99	2.03	0.57	0.62
33	201	202	88.92	87.38	18	1064	0.0014	1.43	0.54	0.80	2.33	0.60	0.67
35	202	200	84.88	84.35	27	750	0.0007	3.51	0.38	1.33	2.22	0.59	0.66
118	209	208	95.56	94.28	21	1500	0.0009	1.76	0.42	0.96	2.01	0.55	0.59
122	101	PR94	67.37	67.18	18	185	0.0010	1.33	0.45	1.19	1.17	0.56	0.61
27	210	209	97.03	95.66	18	1616	0.0008	1.32	0.40	0.90	1.86	0.60	0.67

Placer Ranch Sewer Model
Manhole Results Exhibit 1

Manhole ID	Rim Elevation (ft)	Load (mgd)[1]	Storm Flow (mgd)[1]	Grade (ft)	Status	Hydraulic Jump	Unfilled Depth (ft)[2]	Surcharge Depth (ft)[3]
227	121.8	0.020	0.003	100.81	Not Full	No	20.99	-0.41
228	125.7	0.068	0.011	101.54	Not Full	No	24.16	-0.44
200	106.8	0.000	0.000	85.57	Not Full	No	21.23	-0.93
232	127.8	0.054	0.011	102.17	Not Full	No	25.63	-0.26
233	135.3	0.000	0.000	103.25	Not Full	No	32.05	-0.34
234	131.2	0.228	0.052	105.36	Not Full	No	25.84	-0.40
226	121.8	0.000	0.000	100.03	Not Full	No	21.77	-0.42
216	123.8	0.499	0.050	98.85	Not Full	No	24.95	-0.62
210	116.8	0.166	0.012	97.90	Not Full	No	18.90	-0.63
209	112.8	0.393	0.036	96.49	Not Full	No	16.31	-0.82
208	107.8	0.062	0.020	95.14	Not Full	No	12.66	-0.79
207	109.8	0.001	0.000	94.52	Not Full	No	15.28	-0.79
201	103.8	0.053	0.016	93.84	Not Full	No	9.96	3.67
202	112.3	0.000	0.000	86.17	Not Full	No	26.13	-0.96
203	112.8	0.297	0.025	95.00	Not Full	No	17.80	-0.57
204A	108.8	0.325	0.040	95.84	Not Full	No	12.96	-0.46
211	119.8	0.118	0.031	106.75	Not Full	No	13.05	-0.36

Notes:

1. Peak Storm flow for Manholes occurred at 12:00 pm, this is the value reported here.
2. Unfilled Depth: Depth between the MH Rim elevation and the HGL.
3. Surcharge Depth: Distance between the pipe crown and HGL (negative means HGL is lower than pipe crown).

Positive surcharge depth at MH201 is due to the force main coming in higher than outgoing pipe.

Placer Ranch Sewer Model
Pipe Results Exhibit 2

Pipe ID	US MH	DS MH	US INV	DS INV	Diam (in)	Length (ft)	Slope	PWWF (mgd)	Froude Number	Water Depth (ft)	Velocity (ft/s)	d/D	q/Q
118	209	208	95.56	94.28	21	1500	0.0009	1.76	0.42	0.96	2.01	0.55	0.59
122	101	PR94	67.37	67.18	18	185	0.0010	1.33	0.45	1.19	1.17	0.57	0.61
128	202	207	85.88	85.32	21	798	0.0007	1.74	0.37	1.02	1.86	0.58	0.64
130	207	PR95PS	84.32	84.25	27	100	0.0007	3.54	0.38	1.34	2.21	0.60	0.67
27	210	209	97.03	95.66	18	1616	0.0008	1.32	0.40	0.90	1.86	0.60	0.67
28	216	210	97.97	97.28	18	1392	0.0005	1.00	0.31	0.89	1.42	0.59	0.66
32	208	207	94.18	93.66	21	611	0.0009	1.84	0.42	0.99	2.03	0.57	0.61
33	201	202	88.92	87.38	18	1064	0.0014	1.44	0.54	0.80	2.33	0.53	0.55
36	203	202	94.32	93.37	15	1348	0.0007	0.69	0.37	0.71	1.47	0.57	0.62

Placer Ranch Sewer Model
Manhole Results Exhibit 2

Manhole ID	Rim Elevation (ft)	Load (mgd)[1]	Storm Flow (mgd)[1]	Grade (ft)	Status	Hydraulic Jump	Unfilled Depth (ft)[2]	Surcharge Depth (ft)[3]
600	136.0	0.000	0.000	107.90	Not Full	No	28.10	-1.25
101	94.4	0.656	0.194	68.46	Not Full	No	25.94	-0.41
201	103.8	0.053	0.016	93.84	Not Full	No	9.96	3.42
202	112.3	0.000	0.000	86.85	Not Full	No	25.45	-0.78
203	112.8	0.297	0.025	95.00	Not Full	No	17.80	-0.57
204A	108.8	0.325	0.040	95.84	Not Full	No	12.96	-0.46
207	109.8	0.001	0.000	85.62	Not Full	No	24.18	-0.95
208	107.8	0.062	0.020	95.14	Not Full	No	12.66	-0.79
209	112.8	0.393	0.036	96.49	Not Full	No	16.31	-0.82
210	116.8	0.166	0.012	97.90	Not Full	No	18.90	-0.63
211	119.8	0.118	0.031	106.71	Not Full	No	13.09	-0.74
216	123.8	0.499	0.050	98.85	Not Full	No	24.95	-0.62
226	121.8	0.000	0.000	100.03	Not Full	No	21.77	-0.42
227	121.8	0.020	0.003	100.81	Not Full	No	20.99	-0.41
228	125.7	0.068	0.011	101.54	Not Full	No	24.16	-0.44
232	127.8	0.054	0.011	102.17	Not Full	No	25.63	-0.26
233	135.3	0.000	0.000	103.25	Not Full	No	32.05	-0.34
234	131.2	0.228	0.052	105.36	Not Full	No	25.84	-0.40
500	109.8	0.000	0.000	96.70	Not Full	No	13.10	-2.50
700	128.9	0.000	0.000	105.80	Not Full	No	23.10	-0.83
700A	128.9	0.000	0.000	106.32	Not Full	No	22.58	-0.83

Notes:

1. Peak Storm flow for Manholes occurred at 12:00 pm, this is the value reported here.

2. Unfilled Depth: Depth between the MH Rim elevation and the HGL.

3. Surcharge Depth: Distance between the pipe crown and HGL (negative means HGL is lower than pipe crown).

Positive surcharge depth at MH201 is due to the force main coming in higher than outgoing pipe.

5/16/17 AP

Placer Ranch Sewer Model
Pipe Results Exhibit 3

Pipe ID	US MH	DS MH	US INV	DS INV	Diam (in)	Length (ft)	Slope	PWWF (mgd)	Froude Number	Water Depth (ft)	Velocity (ft/s)	d/D	q/Q
112	228	227	100.98	100.32	21	692	0.0010	2.07	0.44	1.03	2.17	0.59	0.65
118	209	208	95.56	94.28	24	1500	0.0009	3.38	0.43	1.34	2.34	0.67	0.79
120	500	204A	96.70	95.40	30	1850	0.0007	4.90	0.40	1.53	2.40	0.61	0.69
122	101	PR94	67.37	67.18	18	185	0.0010	1.33	0.45	1.19	1.17	0.56	0.61
14	227	226	100.22	99.55	21	710	0.0009	2.10	0.44	1.04	2.17	0.60	0.67
15	200	400	84.25	81.26	42	4274	0.0007	9.88	0.43	1.90	2.87	0.54	0.57
18	233	232	102.76	101.70	21	1117	0.0009	1.93	0.44	0.99	2.13	0.56	0.61
19	234	233	104.93	103.51	15	983	0.0014	1.01	0.52	0.72	2.12	0.58	0.63
27	210	209	97.03	95.66	24	1616	0.0008	2.94	0.43	1.23	2.25	0.61	0.69
28	216	210	97.97	97.28	24	1392	0.0005	2.63	0.32	1.36	1.79	0.68	0.81
3	0	233	107.90	103.59	15	3610	0.0012	0.94	0.47	0.73	1.94	0.59	0.65
31	207	202	93.56	92.88	24	799	0.0009	3.39	0.42	1.34	2.34	0.67	0.79
32	208	207	94.18	93.66	24	611	0.0009	3.44	0.42	1.36	2.34	0.68	0.80
33	201	202	88.92	87.38	18	1064	0.0014	1.43	0.54	0.80	2.33	0.60	0.67
35	202	200	84.88	84.35	42	750	0.0007	9.83	0.43	1.89	2.87	0.54	0.57
36	203	202	94.32	93.37	30	1348	0.0007	5.60	0.39	1.68	2.47	0.67	0.79
40	204A	203	95.30	94.42	30	1250	0.0007	5.27	0.40	1.61	2.44	0.64	0.75
49	226	216	99.45	98.70	21	737	0.0010	2.10	0.46	1.02	2.24	0.58	0.64
51	232	228	101.60	101.08	21	550	0.0009	1.99	0.44	1.01	2.15	0.58	0.63

Placer Ranch Sewer Model
Manhole Results Exhibit 3

Manhole ID	Rim Elevation (ft)	Load (mgd)[1]	Storm Flow (mgd)[1]	Grade (ft)	Status	Hydraulic Jump	Unfilled Depth (ft)[2]	Surcharge Depth (ft)[3]
600	136.0	0.816	0.101	108.63	Not Full	No	27.37	-0.52
101	94.4	0.656	0.194	68.46	Not Full	No	25.94	-0.41
200	106.8	0.000	0.000	86.05	Not Full	No	20.75	-1.70
201	103.8	0.053	0.016	93.84	Not Full	No	9.96	3.42
202	112.3	0.000	0.000	86.76	Not Full	No	25.54	-1.62
203	112.8	0.297	0.025	96.00	Not Full	No	16.80	-0.82
204A	108.8	0.325	0.040	96.91	Not Full	No	11.89	-0.89
207	109.8	0.001	0.000	94.85	Not Full	No	14.95	-0.71
208	107.8	0.062	0.020	95.48	Not Full	No	12.32	-0.70
209	112.8	0.393	0.036	96.84	Not Full	No	15.96	-0.72
210	116.8	0.166	0.012	98.20	Not Full	No	18.60	-0.83
211	119.8	0.118	0.031	106.75	Not Full	No	13.05	-0.36
216	123.8	0.499	0.050	99.26	Not Full	No	24.54	-0.71
226	121.8	0.000	0.000	100.41	Not Full	No	21.39	-0.79
227	121.8	0.020	0.003	101.23	Not Full	No	20.57	-0.74
228	125.7	0.068	0.011	102.01	Not Full	No	23.69	-0.72
232	127.8	0.054	0.011	102.61	Not Full	No	25.19	-0.74
233	135.3	0.000	0.000	103.74	Not Full	No	31.56	-0.77
234	131.2	0.228	0.052	105.63	Not Full	No	25.57	-0.55
500	109.8	4.297	0.609	98.23	Not Full	No	11.57	-0.97
700	128.9	0.000	0.000	106.44	Not Full	No	22.46	-0.36
700A	128.9	0.617	0.115	106.86	Not Full	No	22.04	-0.49

Notes:

1. Peak Storm flow for Manholes occurred at 12:00 pm, this is the value reported here.
2. Unfilled Depth: Depth between the MH Rim elevation and the HGL.
3. Surcharge Depth: Distance between the pipe crown and HGL (negative means HGL is lower than pipe crown).

Positive surcharge depth at MH201 is due to the force main coming in higher than outgoing pipe.

5/16/17 AP

Placer Ranch Sewer Model
Pipe Results Exhibit 4

Pipe ID	US MH	DS MH	US INV	DS INV	Diam (in)	Length (ft)	Slope	PWWF (mgd)	Froude Number	Water Depth (ft)	Velocity (ft/s)	d/D	q/Q
112	228	227	100.98	100.32	21	692	0.0010	2.07	0.44	1.03	2.17	0.59	0.65
118	209	208	95.56	94.28	24	1500	0.0009	3.38	0.43	1.34	2.34	0.67	0.79
120	500	204A	96.70	95.40	30	1850	0.0007	4.90	0.40	1.53	2.40	0.61	0.69
122	101	PR94	67.37	67.18	18	185	0.0010	1.33	0.45	1.19	1.17	0.57	0.61
128	202	207	85.88	85.32	36	798	0.0007	6.57	0.41	1.63	2.59	0.54	0.57
130	207	PR95PS	84.32	84.25	42	100	0.0007	9.95	0.43	1.91	2.87	0.54	0.58
14	227	226	100.22	99.55	21	710	0.0009	2.10	0.44	1.04	2.17	0.60	0.66
18	233	232	102.76	101.70	21	1117	0.0009	1.92	0.44	0.99	2.13	0.56	0.61
19	234	233	104.93	103.51	15	983	0.0014	1.01	0.52	0.72	2.12	0.58	0.63
27	210	209	97.03	95.66	24	1616	0.0008	2.94	0.43	1.23	2.25	0.61	0.69
28	216	210	97.97	97.28	24	1392	0.0005	2.63	0.32	1.36	1.79	0.68	0.80
3	0	233	107.90	103.59	15	3610	0.0012	0.94	0.47	0.73	1.94	0.59	0.65
32	208	207	94.18	93.66	24	611	0.0009	3.44	0.42	1.36	2.34	0.68	0.80
33	201	202	88.92	87.38	18	1064	0.0014	1.44	0.54	0.80	2.33	0.53	0.55
36	203	202	94.32	93.37	30	1348	0.0007	5.60	0.39	1.68	2.47	0.67	0.79
40	204A	203	95.30	94.42	30	1250	0.0007	5.27	0.40	1.61	2.44	0.64	0.75
49	226	216	99.45	98.70	21	737	0.0010	2.10	0.46	1.02	2.24	0.58	0.64
51	232	228	101.60	101.08	21	550	0.0009	1.99	0.44	1.01	2.15	0.58	0.63

Placer Ranch Sewer Model
Manhole Results Exhibit 4

Manhole ID	Rim Elevation (ft)	Load (mgd)[1]	Storm Flow (mgd)[1]	Grade (ft)	Status	Hydraulic Jump	Unfilled Depth (ft)[2]	Surcharge Depth (ft)[3]
600	136.0	0.816	0.101	108.63	Not Full	No	27.37	-0.52
101	94.4	0.656	0.194	68.46	Not Full	No	25.94	-0.41
201	103.8	0.053	0.016	93.84	Not Full	No	9.96	3.42
202	112.3	0.000	0.000	87.51	Not Full	No	24.79	-1.37
203	112.8	0.297	0.025	96.00	Not Full	No	16.80	-0.82
204A	108.8	0.325	0.040	96.91	Not Full	No	11.89	-0.89
207	109.8	0.001	0.000	86.21	Not Full	No	23.59	-1.61
208	107.8	0.062	0.020	95.37	Not Full	No	12.43	-1.06
209	112.8	0.393	0.036	96.74	Not Full	No	16.06	-1.07
210	116.8	0.166	0.012	98.20	Not Full	No	18.60	-0.83
211	119.8	0.118	0.031	106.71	Not Full	No	13.09	-0.74
216	123.8	0.499	0.050	99.26	Not Full	No	24.54	-0.71
226	121.8	0.000	0.000	100.41	Not Full	No	21.39	-0.79
227	121.8	0.020	0.003	101.23	Not Full	No	20.57	-0.74
228	125.7	0.068	0.011	102.01	Not Full	No	23.69	-0.72
232	127.8	0.054	0.011	102.61	Not Full	No	25.19	-0.74
233	135.3	0.000	0.000	103.74	Not Full	No	31.56	-0.77
234	131.2	0.228	0.052	105.63	Not Full	No	25.57	-0.55
500	109.8	4.296	0.609	98.23	Not Full	No	11.57	-0.97
700	128.9	0.000	0.000	106.44	Not Full	No	22.46	-0.36
700A	128.9	0.616	0.115	106.96	Not Full	No	21.94	-0.36

Notes:

1. Peak Storm flow for Manholes occurred at 12:00 pm, this is the value reported here.
2. Unfilled Depth: Depth between the MH Rim elevation and the HGL.
3. Surcharge Depth: Distance between the pipe crown and HGL (negative means HGL is lower than pipe crown).

Positive surcharge depth at MH201 is due to the force main coming in higher than outgoing pipe.

Placer Ranch Sewer Model
Pipe Results Exhibit 5

Pipe ID	US MH	DS MH	US INV	DS INV	Diam (in)	Length (ft)	Slope	PWWF (mgd)	Froude Number	Water Depth (ft)	Velocity (ft/s)	d/D	q/Q
118	209	208	95.56	94.28	21	1500	0.0009	2.10	0.39	1.08	2.09	0.62	0.70
122	101	PR94	67.37	67.18	18	185	0.0010	1.33	0.45	1.17	1.17	0.57	0.61
15	200	400	84.25	81.26	27	4274	0.0007	3.80	0.36	1.41	2.25	0.63	0.72
27	210	209	97.03	95.66	18	1616	0.0008	1.67	0.36	1.05	1.94	0.70	0.84
28	216	210	97.97	97.28	18	1392	0.0005	0.99	0.30	0.89	1.42	0.59	0.66
31	207	202	93.56	92.88	21	799	0.0009	2.18	0.39	1.11	2.10	0.63	0.73
32	208	207	94.18	93.66	21	611	0.0009	2.18	0.39	1.11	2.10	0.63	0.73
33	201	202	88.92	87.38	18	1064	0.0014	1.44	0.54	0.80	2.33	0.53	0.55
35	202	200	84.88	84.35	27	750	0.0007	3.78	0.37	1.40	2.25	0.62	0.71

Placer Ranch Sewer Model
Manhole Results Exhibit 5

Manhole ID	Rim Elevation (ft)	Load (mgd)[1]	Storm Flow (mgd)[1]	Grade (ft)	Status	Hydraulic Jump	Unfilled Depth (ft)[2]	Surcharge Depth (ft)[3]
600	136.0	0.000	0.000	107.90	Not Full	No	28.10	-1.25
101	94.4	0.656	0.194	68.46	Not Full	No	25.94	-0.41
200	106.8	0.000	0.000	85.66	Not Full	No	21.14	-0.84
201	103.8	0.052	0.016	93.84	Not Full	No	9.96	3.67
202	112.3	0.000	0.000	86.26	Not Full	No	26.04	-0.87
203	112.8	0.296	0.025	95.00	Not Full	No	17.80	-0.57
204A	108.8	0.324	0.040	95.84	Not Full	No	12.96	-0.46
207	109.8	0.000	0.000	94.64	Not Full	No	15.16	-0.67
208	107.8	0.062	0.020	95.26	Not Full	No	12.54	-0.67
209	112.8	0.394	0.036	96.61	Not Full	No	16.19	-0.70
210	116.8	0.166	0.012	98.06	Not Full	No	18.74	-0.47
211	119.8	0.412	0.079	106.93	Not Full	No	12.87	-0.52
216	123.8	0.498	0.050	98.85	Not Full	No	24.95	-0.62
226	121.8	0.000	0.000	100.03	Not Full	No	21.77	-0.42
227	121.8	0.020	0.003	100.81	Not Full	No	20.99	-0.41
228	125.7	0.068	0.011	101.55	Not Full	No	24.15	-0.43
232	127.8	0.055	0.011	102.17	Not Full	No	25.63	-0.26
233	135.3	0.000	0.000	103.25	Not Full	No	32.05	-0.34
234	131.2	0.228	0.052	105.36	Not Full	No	25.84	-0.40
500	109.8	0.000	0.000	96.70	Not Full	No	13.10	-2.50
700	128.9	0.000	0.000	105.80	Not Full	No	23.10	-0.83
700A	128.9	0.000	0.000	106.32	Not Full	No	22.58	-0.83

Notes:

1. Peak Storm flow for Manholes occurred at 12:00 pm, this is the value reported here.
2. Unfilled Depth: Depth between the MH Rim elevation and the HGL.
3. Surcharge Depth: Distance between the pipe crown and HGL (negative means HGL is lower than pipe crown).

Positive surcharge depth at MH201 is due to the force main coming in higher than outgoing pipe.

5/16/17 AP

Placer Ranch Sewer Model
Pipe Results Exhibit 6

Pipe ID	US MH	DS MH	US INV	DS INV	Diam (in)	Length (ft)	Slope	PWWF (mgd)	Froude Number	Water Depth (ft)	Velocity (ft/s)	d/D	q/Q
118	209	208	95.56	94.28	21	1500	0.0009	2.10	0.39	1.08	2.09	0.62	0.70
122	101	PR94	67.37	67.18	18	185	0.0010	1.33	0.45	1.17	1.17	0.57	0.61
128	202	207	85.88	85.32	21	798	0.0007	1.61	0.37	0.97	1.82	0.55	0.59
130	207	PR95PS	84.32	84.25	27	100	0.0007	3.90	0.37	1.43	2.26	0.64	0.73
27	210	209	97.03	95.66	18	1616	0.0008	1.66	0.36	1.05	1.94	0.70	0.84
28	216	210	97.97	97.28	18	1392	0.0005	1.00	0.30	0.89	1.42	0.59	0.66
32	208	207	94.18	93.66	21	611	0.0009	2.18	0.39	1.11	2.10	0.63	0.73
33	201	202	88.92	87.38	18	1064	0.0014	1.44	0.54	0.80	2.33	0.53	0.55
36	203	202	94.32	93.37	15	1348	0.0007	0.69	0.35	0.71	1.47	0.57	0.62

Placer Ranch Sewer Model
Manhole Results Exhibit 6

Manhole ID	Rim Elevation (ft)	Load (mgd)[1]	Storm Flow (mgd)[1]	Grade (ft)	Status	Hydraulic Jump	Unfilled Depth (ft)[2]	Surcharge Depth (ft)[3]
600	136.0	0.000	0.000	107.90	Not Full	No	28.10	-1.25
101	94.4	0.656	0.194	68.46	Not Full	No	25.94	-0.41
201	103.8	0.053	0.016	93.84	Not Full	No	9.96	3.42
202	112.3	0.000	0.000	86.85	Not Full	No	25.45	-0.78
203	112.8	0.297	0.025	95.00	Not Full	No	17.80	-0.57
204A	108.8	0.325	0.040	95.84	Not Full	No	12.96	-0.46
207	109.8	0.001	0.000	85.70	Not Full	No	24.10	-0.87
208	107.8	0.062	0.020	95.26	Not Full	No	12.54	-0.67
209	112.8	0.393	0.036	96.61	Not Full	No	16.19	-0.70
210	116.8	0.166	0.012	98.06	Not Full	No	18.74	-0.47
211	119.8	0.411	0.079	106.93	Not Full	No	12.87	-0.52
216	123.8	0.499	0.050	98.85	Not Full	No	24.95	-0.62
226	121.8	0.000	0.000	100.03	Not Full	No	21.77	-0.42
227	121.8	0.020	0.003	100.81	Not Full	No	20.99	-0.41
228	125.7	0.068	0.011	101.54	Not Full	No	24.16	-0.44
232	127.8	0.054	0.011	102.17	Not Full	No	25.63	-0.26
233	135.3	0.000	0.000	103.25	Not Full	No	32.05	-0.34
234	131.2	0.228	0.052	105.36	Not Full	No	25.84	-0.40
500	109.8	0.000	0.000	96.70	Not Full	No	13.10	-2.50
700	128.9	0.000	0.000	105.80	Not Full	No	23.10	-0.83
700A	128.9	0.000	0.000	106.32	Not Full	No	22.58	-0.83

Notes:

1. Peak Storm flow for Manholes occurred at 12:00 pm, this is the value reported here.
2. Unfilled Depth: Depth between the MH Rim elevation and the HGL.
3. Surcharge Depth: Distance between the pipe crown and HGL (negative means HGL is lower than pipe crown).

Positive surcharge depth at MH201 is due to the force main coming in higher than outgoing pipe.

Placer Ranch Sewer Model
Pipe Results Exhibit 7

Pipe ID	US MH	DS MH	US INV	DS INV	Diam (in)	Length (ft)	Slope	PWWF (mgd)	Froude Number	Water Depth (ft)	Velocity (ft/s)	d/D	q/Q
112	228	227	100.98	100.32	21	692	0.0010	2.07	0.42	1.03	2.17	0.59	0.65
118	209	208	95.56	94.28	27	1500	0.0009	3.72	0.42	1.30	2.42	0.58	0.63
120	500	204A	96.70	95.40	30	1850	0.0007	4.90	0.38	1.53	2.40	0.61	0.69
122	101	PR94	67.37	67.18	18	185	0.0010	1.33	0.45	1.17	1.17	0.57	0.61
14	227	226	100.22	99.55	21	710	0.0009	2.10	0.42	1.04	2.17	0.60	0.67
15	200	400	84.25	81.26	42	4274	0.0007	10.22	0.41	1.94	2.89	0.55	0.59
18	233	232	102.76	101.70	21	1117	0.0009	1.93	0.42	0.99	2.13	0.56	0.61
19	234	233	104.93	103.51	15	983	0.0014	1.01	0.50	0.72	2.12	0.58	0.63
27	210	209	97.03	95.66	24	1616	0.0008	3.28	0.39	1.31	2.32	0.66	0.77
28	216	210	97.97	97.28	24	1392	0.0005	2.63	0.29	1.36	1.79	0.68	0.80
3	0	233	107.90	103.59	15	3610	0.0012	0.94	0.44	0.73	1.94	0.59	0.65
31	207	202	93.56	92.88	27	799	0.0009	3.73	0.41	1.31	2.41	0.58	0.64
32	208	207	94.18	93.66	27	611	0.0009	3.78	0.41	1.32	2.42	0.58	0.65
33	201	202	88.92	87.38	18	1064	0.0014	1.43	0.54	0.80	2.33	0.53	0.55
35	202	200	84.88	84.35	42	750	0.0007	10.17	0.41	1.93	2.90	0.55	0.59
36	203	202	94.32	93.37	30	1348	0.0007	5.60	0.36	1.68	2.47	0.67	0.79
40	204A	203	95.30	94.42	30	1250	0.0007	5.27	0.37	1.61	2.44	0.64	0.75
49	226	216	99.45	98.70	21	737	0.0010	2.10	0.44	1.02	2.24	0.58	0.64
51	232	228	101.60	101.08	21	550	0.0009	1.99	0.42	1.01	2.15	0.58	0.63

Placer Ranch Sewer Model
Manhole Results Exhibit 7

Manhole ID	Rim Elevation (ft)	Load (mgd)[1]	Storm Flow (mgd)[1]	Grade (ft)	Status	Hydraulic Jump	Unfilled Depth (ft)[2]	Surcharge Depth (ft)[3]
600	136.0	0.816	0.101	108.63	Not Full	No	27.37	-0.52
101	94.4	0.656	0.194	68.46	Not Full	No	25.94	-0.41
200	106.8	0.000	0.000	86.10	Not Full	No	20.70	-1.65
201	103.8	0.052	0.016	93.84	Not Full	No	9.96	3.42
202	112.3	0.000	0.000	86.80	Not Full	No	25.50	-1.58
203	112.8	0.296	0.025	96.00	Not Full	No	16.80	-0.82
204A	108.8	0.324	0.040	96.91	Not Full	No	11.89	-0.89
207	109.8	0.000	0.000	94.83	Not Full	No	14.97	-0.98
208	107.8	0.062	0.020	95.46	Not Full	No	12.34	-0.97
209	112.8	0.394	0.036	96.82	Not Full	No	15.98	-0.99
210	116.8	0.166	0.012	98.30	Not Full	No	18.50	-0.73
211	119.8	0.412	0.079	106.93	Not Full	No	12.87	-0.52
216	123.8	0.498	0.050	99.26	Not Full	No	24.54	-0.71
226	121.8	0.000	0.000	100.41	Not Full	No	21.39	-0.79
227	121.8	0.020	0.003	101.23	Not Full	No	20.57	-0.74
228	125.7	0.068	0.011	102.01	Not Full	No	23.69	-0.72
232	127.8	0.055	0.011	102.61	Not Full	No	25.19	-0.74
233	135.3	0.000	0.000	103.74	Not Full	No	31.56	-0.77
234	131.2	0.228	0.052	105.63	Not Full	No	25.57	-0.55
500	109.8	4.297	0.609	98.23	Not Full	No	11.57	-0.97
700	128.9	0.000	0.000	106.44	Not Full	No	22.46	-0.36
700A	128.9	0.617	0.115	106.96	Not Full	No	21.94	-0.36

Notes:

1. Peak Storm flow for Manholes occurred at 12:00 pm, this is the value reported here.
2. Unfilled Depth: Depth between the MH Rim elevation and the HGL.
3. Surcharge Depth: Distance between the pipe crown and HGL (negative means HGL is lower than pipe crown).

Positive surcharge depth at MH201 is due to the force main coming in higher than outgoing pipe.

5/16/17 AP

Placer Ranch Sewer Model
Pipe Results Exhibit 8

Pipe ID	US MH	DS MH	US INV	DS INV	Diam (in)	Length (ft)	Slope	PWWF (mgd)	Froude Number	Water Depth (ft)	Velocity (ft/s)	d/D	q/Q
112	228	227	100.98	100.32	21	692	0.0010	2.07	0.42	1.03	2.17	0.59	0.65
118	209	208	95.56	94.28	27	1500	0.0009	3.72	0.42	1.30	2.42	0.58	0.63
120	500	204A	96.70	95.40	30	1850	0.0007	4.90	0.38	1.53	2.40	0.61	0.69
122	101	PR94	67.37	67.18	18	185	0.0010	1.33	0.45	1.17	1.17	0.57	0.61
128	202	207	85.88	85.32	36	798	0.0007	6.57	0.40	1.63	2.59	0.54	0.57
130	207	PR95PS	84.32	84.25	42	100	0.0007	10.28	0.41	1.95	2.90	0.56	0.60
14	227	226	100.22	99.55	21	710	0.0009	2.10	0.42	1.04	2.17	0.60	0.67
18	233	232	102.76	101.70	21	1117	0.0009	1.93	0.42	0.99	2.13	0.56	0.61
19	234	233	104.93	103.51	15	983	0.0014	1.01	0.50	0.72	2.12	0.58	0.63
27	210	209	97.03	95.66	24	1616	0.0008	3.28	0.39	1.31	2.32	0.66	0.77
28	216	210	97.97	97.28	24	1392	0.0005	2.63	0.29	1.36	1.79	0.68	0.80
3	0	233	107.90	103.59	15	3610	0.0012	0.94	0.44	0.73	1.94	0.59	0.65
32	208	207	94.18	93.66	27	611	0.0009	3.78	0.41	1.32	2.42	0.58	0.65
33	201	202	88.92	87.38	18	1064	0.0014	1.44	0.54	0.80	2.33	0.53	0.55
36	203	202	94.32	93.37	30	1348	0.0007	5.60	0.36	1.68	2.47	0.67	0.79
40	204A	203	95.30	94.42	30	1250	0.0007	5.27	0.37	1.61	2.44	0.64	0.75
49	226	216	99.45	98.70	21	737	0.0010	2.10	0.44	1.02	2.24	0.58	0.64
51	232	228	101.60	101.08	21	550	0.0009	1.99	0.42	1.01	2.15	0.58	0.63

Placer Ranch Sewer Model
Manhole Results Exhibit 8

Manhole ID	Rim Elevation (ft)	Load (mgd)[1]	Storm Flow (mgd)[1]	Grade (ft)	Status	Hydraulic Jump	Unfilled Depth (ft)[2]	Surcharge Depth (ft)[3]
600	136.0	0.816	0.101	108.63	Not Full	No	27.37	-0.52
101	94.4	0.548	0.194	68.45	Not Full	No	25.95	-0.42
201	103.8	0.052	0.016	93.84	Not Full	No	9.96	3.67
202	112.3	0.000	0.000	87.51	Not Full	No	24.79	-1.37
203	112.8	0.296	0.025	96.03	Not Full	No	16.77	-0.79
204	108.8	0.324	0.040	96.93	Not Full	No	11.87	-0.87
207	109.8	0.000	0.000	86.26	Not Full	No	23.54	-1.56
208	107.8	0.062	0.020	95.47	Not Full	No	12.33	-0.96
209	112.8	0.394	0.036	96.84	Not Full	No	15.96	-0.97
210	116.8	0.166	0.012	98.31	Not Full	No	18.49	-0.72
211	119.8	0.412	0.079	106.93	Not Full	No	12.87	-0.52
216	123.8	0.498	0.050	99.28	Not Full	No	24.52	-0.69
226	121.8	0.000	0.000	100.43	Not Full	No	21.37	-0.77
227	121.8	0.020	0.003	101.25	Not Full	No	20.55	-0.72
228	125.7	0.068	0.011	102.02	Not Full	No	23.68	-0.71
232	127.8	0.055	0.011	102.62	Not Full	No	25.18	-0.73
233	135.3	0.000	0.000	103.76	Not Full	No	31.54	-0.75
234	131.2	0.228	0.052	105.66	Not Full	No	25.54	-0.52
500	109.8	4.297	0.609	98.25	Not Full	No	11.55	-0.95
700	128.9	0.000	0.000	106.48	Not Full	No	22.42	-0.32
700A	128.9	0.617	0.115	107.00	Not Full	No	21.90	-0.32

Notes:

1. Peak Storm flow for Manholes occurred at 12:00 pm, this is the value reported here.
2. Unfilled Depth: Depth between the MH Rim elevation and the HGL.
3. Surcharge Depth: Distance between the pipe crown and HGL (negative means HGL is lower than pipe crown).

Positive surcharge depth at MH201 is due to the force main coming in higher than outgoing pipe.

5/16/17 AP

ATTACHMENT 2

Technical Memorandum

HydroScience
Strategic Water Solutions

Sacramento • Berkeley • San Jose • Concord

To: Ellaine Taraya
Prepared by: Jason Crowley
Reviewed by: Curtis Lam
Subject: Placer Ranch Specific Plan – Conceptual Lift Station Design
Date: July 17, 2017

INTRODUCTION

HydroScience Engineers (HydroScience) was retained by MacKay & Somps Civil Engineers (M&S) to prepare a conceptual design for the Placer Ranch Specific Plan Sanitary Sewer Lift Stations. This technical memorandum (TM) will serve as the basis for the final lift station design.

The purpose of this TM is to:

1. Determine the capacity and storage requirements for each sanitary sewer lift station under identified collection system design scenarios;
2. Provide recommendations towards lift station equipment, wet well sizing, emergency storage facilities, and supplemental lift station design features;
3. Prepare a budgetary construction cost estimate for each identified alternative;
4. Prepare a conceptual lift station plan using Placer County Lift Station Typical Details.

BACKGROUND

Placer Ranch is a 2,213± acre project located in unincorporated Placer County and the Sunset Area, south of the Western Regional Sanitary Landfill (WRSL), east of the Amoruso Ranch Specific Plan, and north of the City of Roseville's city limits. The Placer Ranch development is within the jurisdiction of Placer County. Placer Ranch is classified as a mixed-use development that includes various land use types including low, medium, and high-density residential housing, commercial areas, light industrial, schools, parks, open space, and satellite campus's for both the California State University, Sacramento and Sierra College. The Placer Ranch property is currently undeveloped rolling grassland and agricultural lands. The area has topographical elevations ranging from 90 to 145 ft., and generally slopes from east to west.

EXISTING DOCUMENTS

The following sewer study was previously conducted for the Placer Ranch Specific Plan development.

Placer Ranch Sewer System Modeling and Lift Station Planning, Technical Memo (2015): The purpose of this document was to develop and analyze the proposed sanitary sewer collection system and preliminarily size a proposed lift station for the Placer Ranch Specific Plan using hydraulic modeling software.

DESIGN CRITERIA

This section discusses the background information and design criteria used for the conceptual lift station design.

Background Information

M&S provided HydroScience with the following background information which provides a basis of design for the Placer Ranch sanitary sewer collection system hydraulic model, lift station design and conceptual configuration.

- Conceptual lift station locations within the Placer Ranch Specific Plan;
- Proposed trunk sewer alignments and adjacent land use;
- Proposed number of equivalent dwelling units (EDU's) per development land use;
- Projected offsite flow contributions from future developments;
- Proposed force main lengths and discharge manhole locations;
- Collection system information (pipe lengths, rim elevations, manhole depth, inverts);
- Topographical data

Sanitary Sewer Collection System Design Scenarios

M&S provided HydroScience with two sanitary sewer collection system scenarios for the sewer sheds east of Fiddyment Road within the Placer Ranch Specific Plan. Each Placer Ranch collection system scenario incorporates four proposed "exhibits" which were analyzed separately, according to various collection system orientations and the expected offsite flow data provided. The sanitary sewer collection system hydraulic model, performed by HydroScience in a separate study, provided the buildout lift station peak wet weather design flow capacity required for each Placer Ranch lift station alternative including base sanitary flows, groundwater infiltration, and rainfall dependent inflow and infiltration based on a 10-year, 24-hour storm.

The sewer shed collection system west of Fiddyment Road was designed to gravity flow towards the proposed lift station on land parcel PR-94 under all eight Placer Ranch alternatives. The west collection system lift station does not receive off-site sewer contributions and will discharge to Manhole 201 in all of the alternatives. The sewer shed collection system east of Fiddyment Road will receive off-site flow contributions from adjacent developments as well as all flow from the west sewer shed however, only 4 of the 8 proposed alternatives incorporate an eastern sewer shed lift station. While gravity flow from Placer Ranch to the Fiddyment Road tie-in manhole is possible, the east sewer shed lift station, proposed to be located on Parcel PR-95, will mitigate the expected impacts of constructing deep gravity sewer pipelines in Fiddyment Road. The Placer Ranch Specific Plan sanitary sewer collection system hydraulic model will establish the hydraulic basis for both proposed lift stations. A summary of the Placer Ranch hydraulic modeling results for flows expected at the lift stations are presented in **Table 1.** The flows from the west will be pumped by the lift station located on Parcel PR-94. For the Exhibits where there is a lift station for the flows from the east (which would be combined with the flows from the west), the lift station on PR-95 design flows are the Total Flows.

Table 1: Expected ADWF & PWWF Flow Rates to Placer Ranch Sewer Lift Stations.

Exhibit	Lift Station for East	East Shed[1]		West Shed[2]		Total Flow[3]	
		ADWF (MGD)	PWWF (MGD)	ADWF (MGD)	PWWF (MGD)	Total ADWF (MGD)	Total PWWF (MGD)
1	No	1.24	2.18	0.52	1.33	1.75	3.51
2	Yes	1.24	2.21	0.52	1.33	1.75	3.54
3	No	4.40	8.55	0.52	1.33	4.92	9.88
4	Yes	4.40	8.62	0.52	1.33	4.92	9.95
5	No	1.46	2.47	0.52	1.33	1.98	3.80
6	Yes	1.46	2.57	0.52	1.33	1.98	3.90
7	No	4.63	8.89	0.52	1.33	5.14	10.22
8	Yes	4.63	8.95	0.52	1.33	5.14	10.28

Notes:
1. Flows represents the difference between Total Flow (PR-95 LS or flow in pipe 15 for Gravity options) and the West Shed (PR-94 LS)
2. Flow at PR-94 LS
3. Flow at PR-95 LS or flow in pipe 15 for Gravity options.

Placer County Lift Station Design Criteria

This section describes the various design criteria utilized in the conceptual design of the Placer Ranch lift stations and force mains. The design criteria is based on design standards established in the Placer County Land Development Manual (LDM), Placer County Pump Station Design Manual (PSDM), and HydroScience's lift station design experience.

Sanitary Sewer Invert Elevations: The proposed Placer Ranch Specific Plan sanitary sewer influent pipeline diameters and lift station invert elevations for each wet well was provided by M&S in the Placer Ranch Sanitary Sewer Master Plan (SSMP) Scenario Exhibits. Invert calculations were based upon the outgoing invert elevation at the upstream manhole and assuming a 100-foot length sewer pipe with a specified 0.1% slope.

Force Main Discharge Elevation: All force mains in the Placer County Specific Plan scenario exhibits are expected to terminate at a discharge manhole. According to the Placer County LDMs section 6.11 (2), each FM discharge elevation shall penetrate the downstream manhole an invert elevation at least 0.2-feet higher than the manhole outlet flow line. No drop connections shall be allowed. Transition discharge manhole shall be required to minimize turbulence and prevent siphoning action in the force main.

Force Main Material: The force main material shall be polyvinyl chloride (PVC) C900 piping and Protecto 401 ceramic lined ductile iron piping for wet well discharge piping per the Placer County PSDM.

Velocity: The force mains and pumps are sized in order to maintain velocities in the force mains between 3.0 and 8.0 feet per second (fps). The minimum recommended flushing velocity is 3.0

fps in order to prevent the settling of solids and grit in the force main. The maximum recommended velocity is 8.0 fps in order to minimize the dynamic friction losses in the force main, and thus reduce the energy required to the pump the sewage in the force main.

Head loss and C-Value: The total friction loss in the system is calculated as the sum of the major friction losses in the pipe and the minor friction losses in the fittings. The friction loss through the force main is calculated using the Hazen-Williams friction loss equation. The design friction coefficient (C-value) for PVC is assumed to be 130 based on typical design standards. The minor friction loss through the fittings is calculated based on assumed minor loss friction coefficient K-values for various fittings (90 degree elbows, gate valves, check valves). Total dynamic head loss (TDH) will be calculated using Bernoulli's energy equation which also accounts for static head loss.

Wet Well Sizing: Per the Placer County PSDM wet well sizing shall assume constant-speed pumps with a maximum six starts per hour at buildout, PWWF conditions. Lift station wet well sizing will also consider the Placer County standard lift station details which provides a general descriptions towards the minimum depth of the wet well below the sanitary sewer invert, distance equal to the diameter of the emergency storage tank, minimum distances for the level alarms and on/off pump levels, minimum operating volume of 2.5 feet, and the height of the pumps (2.5 feet minimum). For the purposes of this analysis, lead pump off level was set to 1-foot below the influent sanitary sewer pipeline invert to prevent regular surcharge to the collection system and ensure that floating grease levels are maintained below the pipeline. According to a memorandum from the Placer County Department of Public Works by Huey Nham, dated October 27, 2016, item 16.vii.e. suggests that the desired maximum wet well depth is 28-feet deep for a typical lift station design to accommodate the County's maintenance staff requirements.

Emergency Storage Facilities: The Placer County LDM specifies that onsite, reinforced concrete, emergency storage tanks be provided for each lift station and have a minimum volume of 24 hours of the average day design flow. According to the Placer County PSDM and typical lift station details, onsite emergency storage facilities shall be sized for 4-hours of PWWF at full buildout and incorporate a dual redundant force main for lift stations receiving an average dry weather flow greater than 0.5 MGD. Onsite emergency storage facilities shall be constructed of parallel reinforced concrete piping (RCP), lined with T-Lock and tied into the lift station wet well.

Lift Station Pumps: The Placer County standard lift station details specify that the pump minimum pump assembly shall be a duplex system with each pump sized to pump the design PWWF at the total dynamic head (TDH). Per the Placer County Lift Station Specifications, pump manufacturers shall be Vaughan for chopper pumps, and either Myers, Barns, or Chicago for all other pumps.

RECOMMENDATIONS

This section includes the lift station and force main design data and design specifications in a set of five tables. These tables are summarized below:

Table 2. Collection System and Lift Station Configuration: Table 2 includes the location of each lift station, elevation data, upstream manhole information, pipeline and invert data, force main length, and downstream manhole information. The data in **Table 2** provides the design basis for calculating the TDH, sizing the pumps, and sizing the force mains.

Table 3. Friction Losses: The friction losses include major losses through the force main and minor losses through fittings. It is assumed that each lift station system would be designed with a standard mechanical orientation for the lift station discharge piping, utility vault appurtenances, and force main discharge.

Table 4. Static Head and Total Dynamic Head: The static head is calculated as the difference between the lift station's discharge elevation and the elevation of the lead pump off level. The total dynamic head is the sum of the static head and friction losses.

Table 5. Pump Design Specifications: The recommended pumps for each lift station scenario exhibit are included in this table. Pump information was attained utilizing the Myers/Pentair online pump size calculator. Pump sizing is based upon the lift station's system peak wet weather flow rate and resulting total dynamic head. Detailed data sheets for each pump are shown in **Attachments A & B**. This pump selection information is for high level conceptual planning purposes only and is only intended to give the client a conceptual idea towards the type/size of submersible pump required and the pump's general specifications. It is anticipated that the pump selection information will be re-evaluated or modified during the design process.

Table 6. Lift Station Design Specifications: This table includes the conceptual design information for each lift station including the wet well diameter, pump configuration, required emergency storage tank volume assuming 4-hours of PWWF, wet well depth, stand-by generator requirements, and the inclusion of a dual redundant forcemain.

In all Placer County Specific Plan scenario exhibits, theoretical, buildout sanitary sewer PWWF rates are high and the upstream collection system has been configured such that the wet well's influent gravity sewer pipe penetrations are deep. Each lift station's active working volume was calculated under the assumption of 6 starts per hour and fixed speed submersible sewage pumps. The working volume depth was then constrained to a maximum of 12' such that the resultant wet well internal diameter was kept within reasonable limits according to industry standard precast concrete wet wells. Precast wet well structures can easily be deepened through the application of additional concrete barrel mid-sections however, large diameter wet wells begin crossing the line of feasibility around 12-feet diameter. For wet well structures requiring diameters larger than 12-feet, square, cast-in-place concrete structures become increasingly attractive for new developments based upon constructability.

The conceptual design information presented in this analysis may be modified during the detailed lift station design, therefore, site specific lift station layouts are not included in this TM. The Placer County typical lift station site plan is included for reference in **Attachment C**.

The following abbreviations are used in Tables 1 through 7:

ADWF	Average Dry Weather Flow
APPROX	Approximate
DIA	Diameter
DS	Downstream
EL	Elevation
FM	Force Main
FPS	Feet per Second
HL	Head Loss
HP	horsepower
KW	kilowatt
LS	Lift Station
MAX	Maximum
MH	Manhole
MGD	Million Gallons per Day
PRSP	Placer Ranch Specific Plan
PWWF	Peak Wet Weather Flow
RCP	Reinforced Concrete Pipe
RPM	Revolutions per Minute
SA	Surface Area
UP	Upstream
WW	Wet Well

Table 2: Lift Station Design Data for the Placer Ranch West Shed Lift Station

PRSP Sewer Shed	Scenario	Exhibit	Lift Station	LS Rim EL (ft)	Influent Pipe Dia (in)	LS Invert In EL (ft)	US MH Invert Out (ft)	Discharge FM Length (ft)	FM High EL (ft)[2]	FM Dia (in)[3]
West	All	All	PR-94	94.0	18	67.40	67.62	6,050	93.0	10
East	1	2	PR-95	109.0	27	85.56	85.63	5,870	109.0	12
East	1	4	PR-95	109.0	42	84.77	84.82	5,870	109.0	20
East	2	6	PR-95	109.0	27	85.56	85.63	5,870	109.0	12
East	2	8	PR-95	109.0	42	84.77	84.82	5,870	109.0	20

Notes:
1. Lift Station rim elevation, invert elevations, force main lengths, and force main high point elevations were provided by MacKay & Somps.
2. Force main high elevation represents the highest crown elevation along the sewer force main alignment assuming a 6-foot cover from ground surface to crown.
3. East sewer shed force main diameters were calculated using each respective scenario's PWWF and velocity required maximum of 8 feet per second.

Table 3: System Friction Losses

PRSP Sewer Shed	Scenario	Exhibit	Lift Station	DS MH	FM Length (ft)	FM Material	PWWF (MGD)	FM Dia (in)	Velocity (fps)	C Value[2]	HL Major (ft)[3]	HL Minor (ft)[4]	Total Friction Loss (ft)[5]
West	All	All	PR-94	232	6,050	C900 PVC	1.33	10	3.8	130	32.4	2.3	34.7
East	1	2	PR-95	400	5,870	C900 PVC	3.54	12	7.0	130	79.1	7.8	86.9
East	1	4	PR-95	400	5,870	C900 PVC	9.95	20	7.1	130	44.6	3.1	47.7
East	2	6	PR-95	400	5,870	C900 PVC	3.90	12	7.7	130	94.7	2.4	97.1
East	2	8	PR-95	400	5,870	C900 PVC	10.28	20	7.3	130	47.4	3.3	50.7

Notes:
4. Information for the location of the lift station and force main length was provided by MacKay & Somps.
5. C-value is assumed for C900 PVC force main piping.
6. Major head loss is calculated using the Hazen-Williams friction loss equation for the length of the force main.
7. Minor head loss is calculated for fittings.
8. The total friction loss includes the sum of the major head loss and the minor head loss.

Table 4: Static Head and Total Dynamic Head

PRSP Sewer Shed	Scenario	Exhibit	Lift Station	DS MH	Bottom of Wet Well EL (ft)	Lead Pump On EL (ft)	Lead Pump Off EL (ft)	Max Static Head (ft)[3]	Total Friction Loss (ft)[4]	Total Dynamic Head (ft)[5]
West	All	All	PR-94	201	57.5	65.4	60.5	32.5	34.7	67.2
East	1	2	PR-95	400	71.1	84.6	74.1	34.9	86.9	121.8
East	1	4	PR-95	400	68.3	82.8	71.3	37.7	47.7	85.4
East	2	6	PR-95	400	70.0	84.6	73.0	36.0	97.1	133.1
East	2	8	PR-95	400	67.9	82.8	70.9	38.1	50.7	88.8

Notes:
1. Information for the location of the lift station was provided by MacKay & Somps.
2. The maximum static head is the difference between the force main high point elevation and the lead pump off elevation.
3. The total friction loss includes friction losses from the force main pipeline and fittings **(Table 2)**.
4. The total dynamic head is the sum of the maximum static head and the total friction loss.

Table 5: Pump Design Specifications

PRSP Sewer Shed	Scenario	Exhibit	Lift Station	Flow Per Pump (GPM)	TDH (ft)	Make	Model	Type[2]	Discharge Dia (in)[3]	Motor (HP)	Pump Speed (rpm)	Volts	Max Solid Dia (in)	Power (KW)
West	All	All	PR-94	924	67.2	Myers-Pentair	4VC/4VCX	Sub-SH	4	30	1750	460	3.2	33
East	1	2	PR-95	2458	121.8	Myers-Pentair	8VL/8VLX	Sub-SH	8	125	1750	460	4.0	108
East	1	4	PR-95	2304	85.4	Myers-Pentair	8VL/8VLX	Sub-SH	8	75	1750	460	4.0	66
East	2	6	PR-95	1354	133.1	Myers-Pentair	8VL/8VLX	Sub-SH	8	100	1750	460	4.0	86
East	2	8	PR-95	2380	88.8	Myers-Pentair	8VL/8VLX	Sub-SH	8	100	1750	460	4.0	86

Notes:
1. Information for the location of the lift station was provided by MacKay & Somps.
2. Pump type shall be submersible style solids handling pumps.
3. This discharge diameter size represents the outlet diameter to the pump. Fittings may be required to transition from pump outlet size to the force main size.
4. All design information is conceptual and may be modified during the design process.

Table 6: Lift Station Design Specifications

PRSP Sewer Shed	Scenario	Exhibit	Lift Station	WW Dia (ft)[2]	LS Pump Configuration[3]	Approx WW Rim EL (ft)[4]	Approx WW Depth (ft)[5]	Required 4-hr Storage Volume (MG)[6]	Onsite Standby Generator	Dual Redundant Forcemain
West	All	All	PR-94	9	Duplex	94.0	31.7	0.2	YES	YES
East	1	2	PR-95	10	Duplex	109.0	38.5	0.6	YES	YES
East	1	4	PR-95	16	Quad	109.0	41.2	1.7	YES	YES
East	2	6	PR-95	10	Triplex	109.0	39.6	0.7	YES	YES
East	2	8	PR-95	16	Quad	109.0	41.6	1.7	YES	YES

Notes:
1. Information for the location of the lift station was provided by MacKay & Somps.
2. Non-standard lift station wet well diameters may also be constructed in square, plan view orientation for ease of construction. See final considerations.
3. Duplex = 1 duty, 1 stand-by; Triplex = 2 duty, 1 stand-by; Quad = 3 duty, 1 stand-by; where duty and stand-by pumps are all identical.
4. All rim elevations of the wet wells are approximate based on the draft grading plan and upstream manhole elevation. Rim elevations will be revised once the final grading plan is complete.
5. All wet well depths are based on the draft Sanitary Sewer Master Plan rim elevations, lift station working volume, 3' residual lift station depth for submersible pumps. Wet well depths will be revised once the final grading plan is complete.
6. Placer County 24-hour ADWF storage volume requirement reduced to 4-hours PWWF for lift stations with dual force main redundancy and inclusion of lift station emergency generator designed to accommodate full lift station functionality.
7. All design information is conceptual and may be modified during the design process.

EMERGENCY STORAGE

Emergency storage requirements for a lift station typically varies depending on the lift station's size, location, surrounding habitat sensitivity, and emergency power facilities. A lift station's theoretical emergency storage capacity can typically consist of a combination of any wet well capacity, sewer collection system capacity, and supplemental storage above the high water alarm and below overflow level.

Based upon the PRSP land use plan provided by MacKay & Somps, **Table 7** provides each lift station parcel cumulative surface area and the practical surface area each lift station parcel could dedicate to underground emergency storage facilities. Available emergency storage area calculations assume that 75% of the parcel's overall land could be utilized for a parallel system of interconnected reinforced concrete pipes, of which, 20% would be lost due to spatial requirements between tanks. This analysis also assumes that only one row of pipes, configured above the lift station's high-level alarm, would be utilized for the storage system per Placer County typical lift station design drawings. The total available length of onsite storage was then determined considering each parcel's available emergency storage surface area and proposed emergency storage RCP tank diameter. The total length of onsite storage pipe directly translates to an available storage volume which is divided by the PWWF rate to determine the total length of time each RCP storage facility could sustain system surcharge under PWWF conditions as shown in the following formulas:

$$\text{Available Surface Area } (ft^2) = \text{Total Parcel Area } (ft^2) \times \text{0.75 (assume 75\% of parcel area available)}$$

$$\text{Potential Length of Storage Pipe (ft)} = \frac{\left[\text{Available Surface Area } (ft^2) \times \text{0.80 (assume 20\% of available area needed for pipe spacing)}\right]}{\text{Storage Pipe Diameter (8 ft)}}$$

$$\text{Storage Time (hrs)} = \frac{\left[\text{Pipe Cross Sectional Area } (ft^2) \times \text{Potential Length of Storage Pipe (ft)} \times 7.48\ gal/ft^3\right]}{\text{PWWF (gph)}}$$

Based upon these calculations, Exhibits 4 & 8 determined that there is not enough space in the east lift station parcel to provide a minimum 4-hours of PWWF emergency storage volume as required per Placer County PSDM design standards for lift stations receiving an ADWF greater than 0.5 MGD.

In addition to emergency storage tanks, the risk of overflow is expected to be minimized by use of lift station redundancy. The following redundancy fixtures for the proposed lift stations are vital design elements that should be implemented for final design:

- A redundant pump for all flow conditions;
- Bypass provisions in the lift station utility vault;
- Emergency power generation equipment including automatic transfer devices;
- 24-hours of available fuel for the Emergency generator;
- Redundant lift station level control;
- Programmable logic controllers;
- SCADA control and integration;

Table 7: Onsite Lift Station Emergency Storage Calculations

PRSP Sewer Shed	Exhibit	Lift Station[1]	Total Parcel SA (SF)	Available Emergency Storage SA (SF)[2]	Emergency Storage RCP Pipe Dia (ft)	Available Length of Onsite RCP Storage (ft)	PWWF (mgd)	Time of PWWF Onsite Storage (Hrs)[3]
West	All	PR-94	23,394	14,036	8	1,755	1.33	11.9
East	2	PR-95	24,000	14,400	8	1,800	3.54	4.6
East	4	PR-95	24,000	14,400	8	1,800	9.95	1.6
East	6	PR-95	24,000	14,400	8	1,800	3.90	4.2
East	8	PR-95	24,000	14,400	8	1,800	10.28	1.6

Notes:
1. Lift station location and parcel surface area was provided by MacKay & Somps.
2. Available emergency storage surface area was calculated assuming 75% of the Placer Ranch Specific Plan LS parcel could be dedicated to emergency storage and 20% of the available emergency storage surface area would be consumed by necessary parallel storage pipe spacing. This assumption was for feasibility study purposes only and may change during detailed design.
3. Time of PWWF onsite storage calculated by dividing the available volume of onsite RCP emergency storage facilities by PWWF.

COST ESTIMATE

The conceptual cost estimate for the Placer Ranch Specific Plan lift stations includes the following items:

- Lift station (including pumps, wet well, valve vault, chemical building, site work, controls/SCADA integration, electrical, miscellaneous appurtenances);
- Emergency generator;
- Emergency storage tank system sized according to 4-hours of PWWF or available length of RCP when 4-hour storage requirement could not be met;
- Site grading and Electrical.

The cost of the force main is not included because it is assumed that the force main will be constructed as part of the Placer Ranch sanitary sewer collection system. The costs of items such as influent/effluent manholes or other site specific items are also not included in the cost estimate. Approximate lift station cost assumes a package system fully furnished with pumps, utility vault, mechanical piping and appurtenances, controls, SCADA integration and telemetry.

The Placer Ranch Specific Plan conceptual cost estimates for the west and east sanitary sewer lift stations are provided in **Table 8 and Table 9**, respectively.

Table 8: Probable Cost of Construction for the Placer Ranch West Shed Lift Station Alternatives.

Item	Unit	Quantity	Unit Cost	Total Cost
West Shed - All Scenarios (PR-94)				
RCP Storage Facilities (96" x 542' + Manholes)	LF	587	$1,500	$880,000
Emergency Generator	EA	1	$100,000	$100,000
Packaged Lift Station - Duplex Pumps	LS	1	$75,000	$80,000
Wet Well (9' Diameter, 32' Deep)	LF	32	$2,000	$60,000
Site Grading	LS	1	$50,000	$50,000
Electrical	LS	1	$250,000	$250,000
			West Shed Subtotal	$1,420,000
			30% Contingency	$430,000
			Total Cost of Construction	**$1,850,000**

Notes:
1. Total cost rounded to the nearest $10,000.
2. Probable cost of construction does not include project soft costs.

Table 9: Probable Cost of Construction for the Placer Ranch East Shed Lift Station Alternatives.

Item	Unit	Quantity	Unit Cost	Total Cost
East Shed - Scenario 1, Exhibit 2 (PR-95)				
RCP Storage Facilities (120" x 960' + Manholes)	LF	1,561	$1,500	$2,340,000
Emergency Generator	EA	1	$150,000	$150,000
Packaged Lift Station - Duplex Pumps	LS	1	$100,000	$100,000
Wet Well (10' Diameter, 39' Deep)	LF	39	$2,500	$100,000
Site Grading	LS	1	$50,000	$50,000
Electrical	LS	1	$250,000	$250,000
			East Shed - Scenario 1, Exhibit 2 Subtotal	$2,990,000
			30% Contingency	$900,000
			Total Cost of Construction	**$3,890,000**
East Shed - Scenario 1, Exhibit 4 (PR-95)				
RCP Storage Facilities (120" x 1,440' + Manholes)[3]	LF	1,800	$1,500	$2,700,000
Emergency Generator	EA	1	$200,000	$200,000
Packaged Lift Station - Quad Pumps	LS	1	$200,000	$200,000
Wet Well (16' Diameter, 41' Deep) Square, CIP	LF	41	$3,000	$120,000
Site Grading	LS	1	$50,000	$50,000
Electrical	LS	1	$250,000	$250,000
			East Shed - Scenario 1, Exhibit 4 Subtotal	$3,520,000
			30% Contingency	$1,060,000
			Total Cost of Construction	**$4,580,000**
East Shed - Scenario 2, Exhibit 6 (PR-95)				
RCP Storage Facilities (120" x 1,050' + Manholes)	LF	1,720	$1,500	$2,580,000
Emergency Generator	EA	1	$150,000	$150,000
Packaged Lift Station - Triplex Pumps	LS	1	$150,000	$150,000
Wet Well (10' Diameter, 40' Deep)	LF	40	$2,500	$100,000
Site Grading	LS	1	$50,000	$50,000
Electrical	LS	1	$250,000	$250,000
			East Shed - Scenario 2, Exhibit 6 Subtotal	$3,280,000
			30% Contingency	$980,000
			Total Cost of Construction	**$4,260,000**
East Shed - Scenario 2, Exhibit 8 (PR-95)				
RCP Storage Facilities (120" x 1,440' + Manholes) [3]	LF	1,800	$1,500	$2,700,000
Emergency Generator	EA	1	$200,000	$200,000
Packaged Lift Station - Quad Pumps	LS	1	$200,000	$200,000
Wet Well (16' Diameter, 42' Deep) Square, CIP	LF	42	$3,000	$130,000
Site Grading	LS	1	$50,000	$50,000
Electrical	LS	1	$250,000	$250,000
			East Shed - Scenario 2, Exhibit 8 Subtotal	$3,530,000
			30% Contingency	$1,060,000
			Total Cost of Construction	**$4,590,000**

Notes:
1. Total cost rounded to the nearest $10,000.
2. Probable cost of construction does not include associated soft costs.
3. Will not provide 4-hour minimum emergency storage due to insufficient space on the existing LS parcel.

CONSIDERATIONS

- The cost for the eastern lift station associated with Exhibits 4 and 8 would make the lift station much larger than what is conceptualized in the LDM.
- For all lift station scenarios, the wet well diameter and depth restricts the wet well material to be either precast or cast-in-place concrete wet wells. Fiberglass structures are typical for smaller diameter wet wells and should not be considered for this project.
- For Exhibits 4 and 8, the required volume of the wet well makes a standard circular wet well configuration not practical. It is recommended that, should this lift station be constructed using these exhibits as a basis, the wet well be in a custom rectangular shape with a bottom slope grout infill to facilitate self-cleaning and minimizing solids deposition
- The depth for the eastern lift station wet well is between 38 and 42 feet, depending on the exhibit. This depth is greater than desired, and may render the lift station at the eastern side of Placer Ranch infeasible compared to the gravity sewer option.
- Lift station wet well diameters were reduced by increasing wet well active volumes to theoretical limits. Should phasing cause much lower flow rates than the design PWWF, odor control facilities are highly recommended for detail design to avoid lift station odors.
- The LDM requirement for 4-hours of on-site emergency storage pipeline cannot be achieved for Exhibits 4 and 8.
- Each lift station must incorporate a dual redundant force main for redundancy to reduce the emergency storage requirements. Each force main will be sized to the same dimensions and capable of conveying PWWF.
- All lift stations shall be designed with backup electric generators capable of supplying enough energy for complete lift station functionality in the event of a utility power outage. A sound pressure test is recommended to determine the acceptable level of noise pollution contributed by the generator at full load.
- A drop/transition inlet for the force main outlet at downstream manhole #400 should be incorporated into the final detailed design to avoid a significant downward sloping force main and problems with air entrapment.

Attachment A

MYERS/Pentair 4VC/4VCX Pump Data Sheets

Pump Data Sheet - Myers

Company: HydroScience Engineers
Name: Jason Crowley
Date: 5/12/2017

West Shed Lift Station - All Alternatives

PENTAIR
MYERS®

Pump:

Size: 4VC/4VCX

Type: Sub Solids Handling
Synch speed: 1800 rpm

Speed: 1750 rpm
Dia: 9.75 in

Curve:

Impeller:

Specific Speeds:

Ns: ---
Nss: ---

Dimensions:

Suction: ---
Discharge: 4 in

Pump Limits:

Temperature: ---
Pressure: ---
Sphere size: 3.1875 in

Power: ---
Eye area: ---

Search Criteria:

Flow: 924 US gpm

Head: 67.4 ft

Fluid:

Water
SG: 1
Viscosity: 1.105 cP

Temperature: 60 °F
Vapor pressure: 0.2563 psi a
Atm pressure: 14.7 psi a

NPSHa: ---

Motor:

Standard: NEMA
Enclosure: TEFC

Size: 30 hp
Speed: 1800
Frame: 286T

Sizing criteria: Max Power on Design Curve

---- Data Point ----

Flow:	924 US gpm
Head:	69.1 ft
Eff:	73.9%
Power:	21.8 hp
NPSHr:	---

---- Design Curve ----

Shutoff head:	106 ft
Shutoff dP:	45.8 psi
Min flow:	236 US gpm
BEP:	74.3% @ 984 US gpm
NOL power:	25.9 hp @ 1359 US gpm

-- Max Curve --

Max power: 56.5 hp @ 1800 US gpm

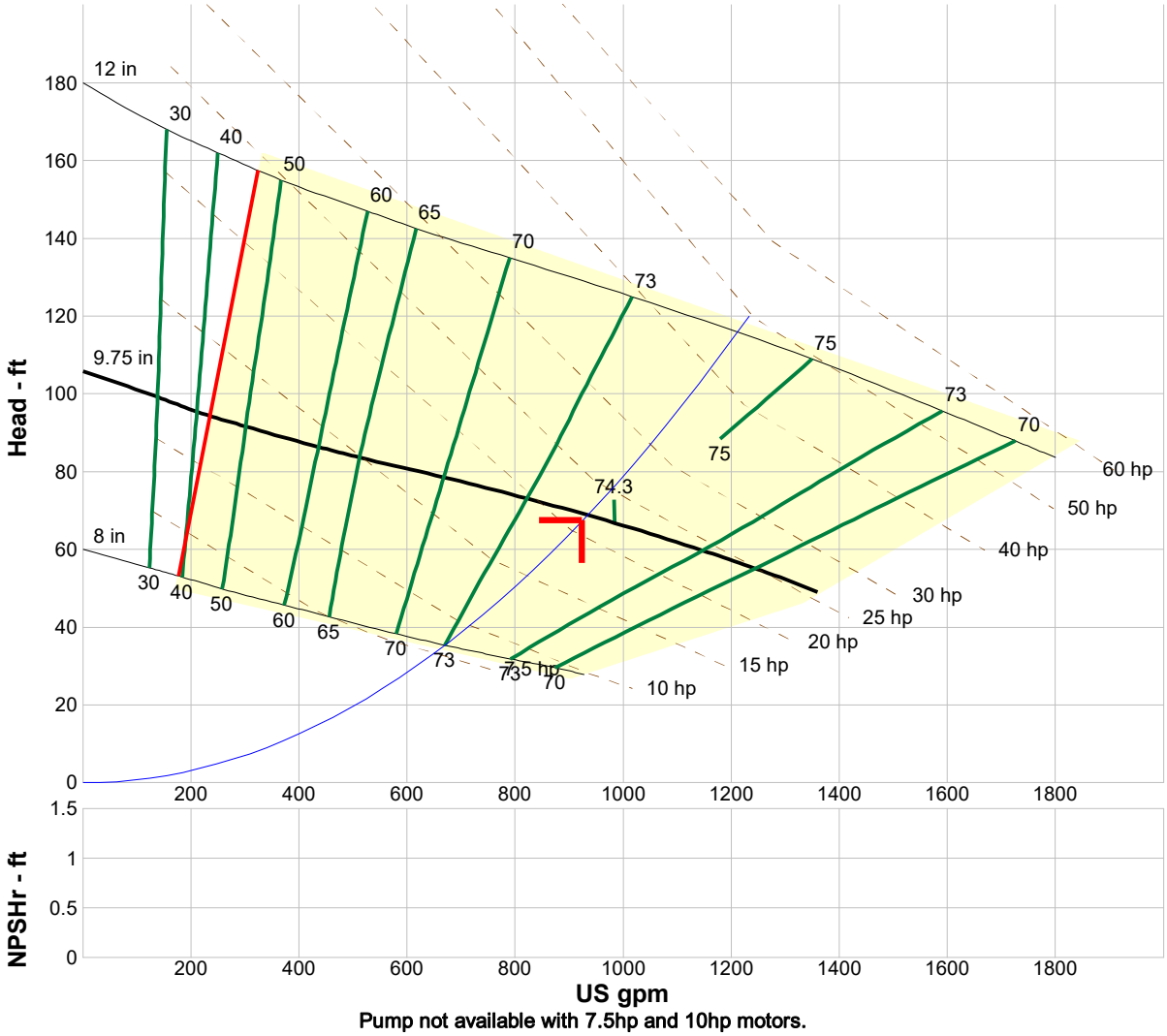

Pump not available with 7.5hp and 10hp motors.

Performance Evaluation:

Flow US gpm	Speed rpm	Head ft	Efficiency %	Power hp	NPSHr ft
1109	1750	61.3	73.3	23.4	---
924	1750	69.1	73.9	21.8	---
739	1750	76	71.4	19.8	---
554	1750	82.2	66.4	17.2	---
370	1750	88.9	55.2	14.9	---

Selected from catalog: Myers.60 Vers: 09-11

PENTAIR

MYERS®

Typical Installation

4VC and 4VCX

4" Submersible Solids Handling Wastewater Pump Standard (4VC) and Hazardous Location (4VCX)

Slide Rail Dimensions (SRA/SRAX-44HH Shown)

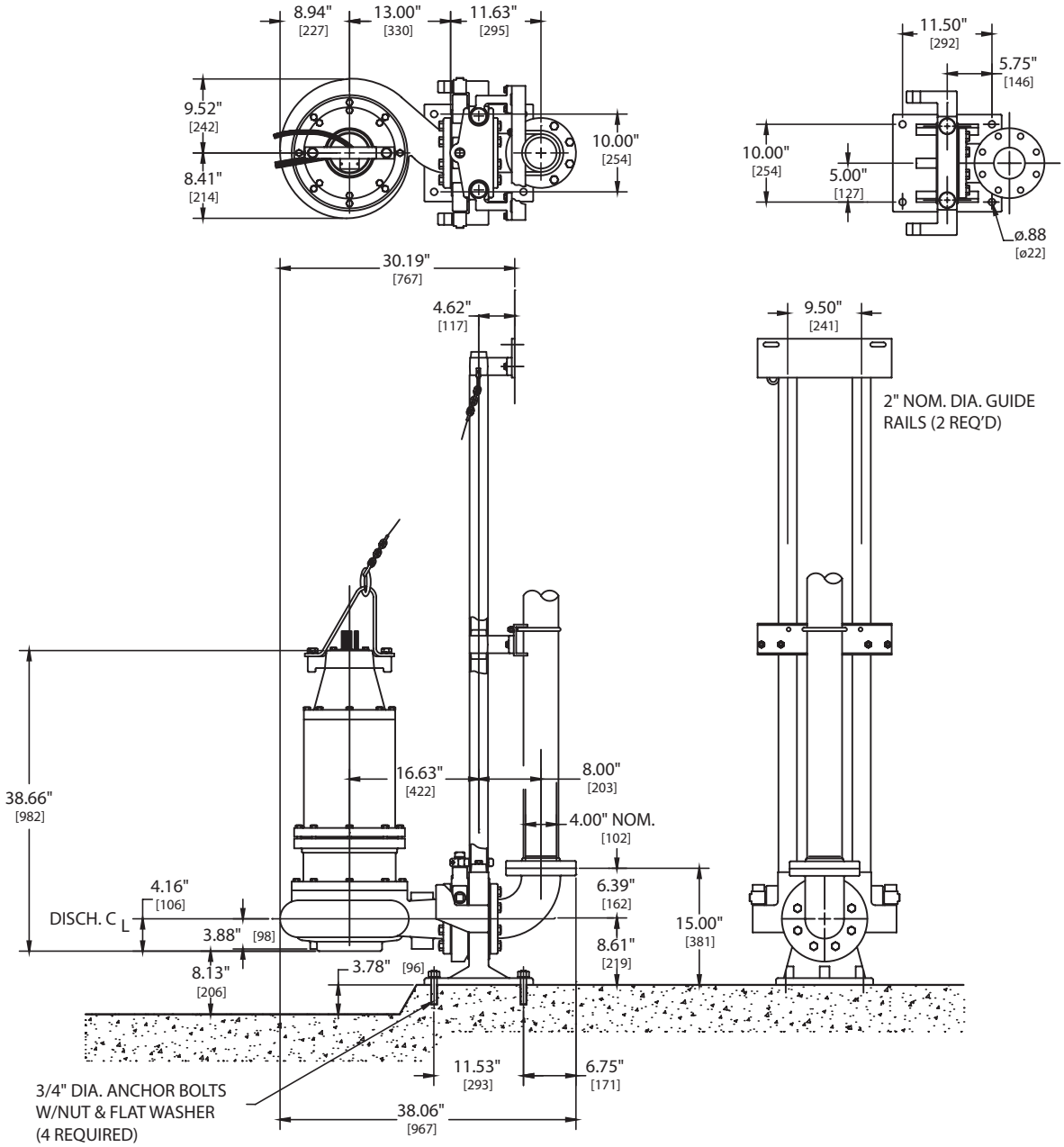

Note: Metric Dimensions Shown [mm]. Tolerance: ±1/8"

PENTAIR

MYERS®

MODELS 4VC & 4VCX

4" SOLIDS HANDLING WASTEWATER PUMPS

STANDARD (4VC) AND HAZARDOUS LOCATION (4VCX) CONSTRUCTION

FM APPROVED

WWW.FEMYERS.COM

MYERS® MODELS 4VC & 4VCX
Solids Handling Wastewater Pumps

Cut Your Pumping Costs

The 4VC and 4VCX (hazardous location) submersible wastewater pumps are a heavy-duty 4" solids handling series capable of passing a full 3-3/16" spherical solid. Myers rounded port, 2-vane, enclosed impellers prevent solids from binding or clogging and offer high operating efficiencies to cut your pumping costs. The 4VC series modified constant velocity volute case provides smooth operation over an extended portion of the performance curve for longer seal and bearing life. For use in municipal lift stations, treatment plants and industrial waste applications. Myers offers a complete line of wastewater pumps, lift-out rail assemblies, controls and accessories to meet your needs. Call your Myers distributor or the Myers sales office at 419-289-1144 for more details.

Product Capabilities		
Capacities To	1800 gpm	113.4 lps
Heads To	165 ft.	50.3 m
Solids Handling	3-3/16 in.	80 mm
Liquids Handling	raw unscreened sewage, effluent, drain water	
Intermittent Liquid Temp.	up to 140˚F	up to 60˚C
Winding Insulation Temp. (Class H)	356˚F	180˚C
Available Motors	1750 RPM: 15 HP, 200, 230, 460, 575V, 3Ø, 60 Hz. 20–60 HP, 230, 460, 575V, 3Ø, 60 Hz. 1150 RPM: 5 – 10 HP, 200, 230, 460, 575V, 3Ø, 60 Hz. 870 RPM: 2 – 7-1/2 HP, 200, 230, 460, 575V, 3Ø, 60 Hz.	
Std. Third Party Approvals Optional Approvals	CSA FM, Class 1, Groups C & D (4VCX only)	
Acceptable pH Range	6 – 9	
Specific Gravity	.9 – 1.1	
Viscosity	28 – 35 SSU	
Discharge, Horizontal Flanged Centerline	4 in. 125 lb. ANSI	101.6 mm

Construction Materials	
Motor Housing, Seal Housing, Cord Cap and Volute Case	cast iron, Class 30, ASTM A48
Enclosed 2-Vane Impeller	ductile iron, Class 65, ASTM A536
Power and Control Cord	SOOW, W
Mechanical Seals: Standard Optional	 double tandem, type 21 carbon and ceramic lower tungsten, carbide
Pump, Motor Shaft	416 SST
Fasteners	300 Series SST
Volute Wear Ring	brass

Note: Consult factory for applications outside these recommendations.

Pump Features and Applications

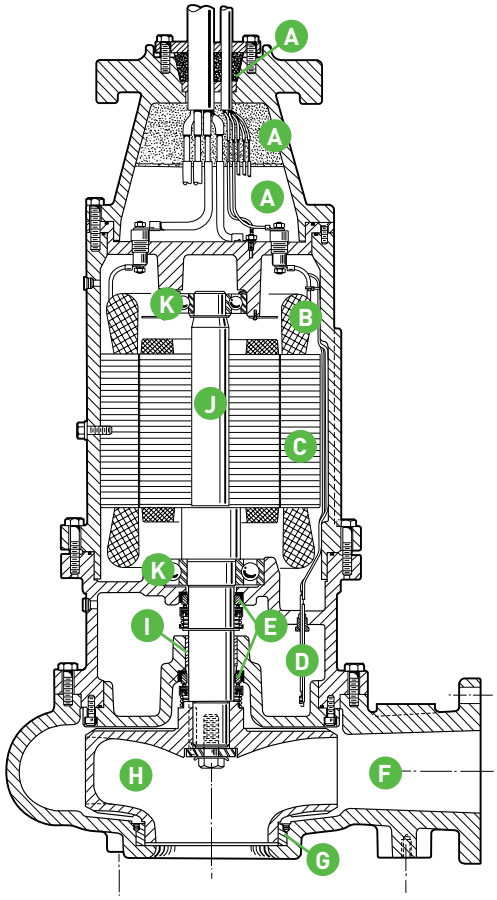

A. Cable Entry System

Provides triple seal protection. Cable jacket sealed by compression grommet. Individual wires sealed by epoxy potting. Terminal board separates motor chamber from cord cap.

B. Heat Sensor

Protects motor from burnout due to excessive heat from any overload condition. Automatically resets when motor has cooled.

C. Motor Stator

Heat shrunk into housing for perfect alignment and best heat transfer. Oil-filled motor conducts heat and lubricates bearings.

D. Seal Leak Probes

Detect water in seal housing. Activate warning light in control panel.

E. Shaft Seals

Double tandem mechanical shaft seals protect motor. Oil-filled seal chamber provides continuous lubrication.

F. Volute Case

Modified constant velocity volute handles 3-3/16" solids. 4" ANSI 125 lb. flange.

G. Brass Wear Ring

Prevents rust buildup and reduces leakage and wear. Replaceable to restore original running clearances and pump efficiencies.

H. High Efficiency Impeller

2-vane with rounded ports. Handles 3-3/16" solids. Pump-out vanes help keep trash from seal; reduce pressure at seal faces.

I. Sleeve Bearing

Takes radial shock load; provides flame path.

J. Heavy 416 SST Shaft

Corrosion resistant.

K. Ball Bearings

Upper and lower ball bearings support shaft and rotor and take axial and radial loads.

High Efficiency Hydraulic Design Cuts Pumping Costs and Extends Life of Fluid End Components.

- Two-vane, rounded port, enclosed type impellers handle 3-3/16" solids with ease at high operating efficiencies.
- Modified constant velocity volute offers quiet operation, low radial loads over extended portion of performance curve.

Durable Motor Will Deliver Many Years of Reliable Service.

- Oil-filled motor for maximum heat dissipation and constant bearing lubrication.
- Heat sensor thermostats embedded in windings protect motor from overheat conditions.
- Seal leak probes warn of moisture entry; help prevent costly motor burnout.
- Double tandem shaft seals prevent sewage from entering motor.
- Power and control cables are triple sealed with epoxy, compression grommet and terminal board.

Available with Optional FM Approval for Use In Class 1, Groups C and D Hazardous Locations (4VCX only).

Performance Data

870 RPM

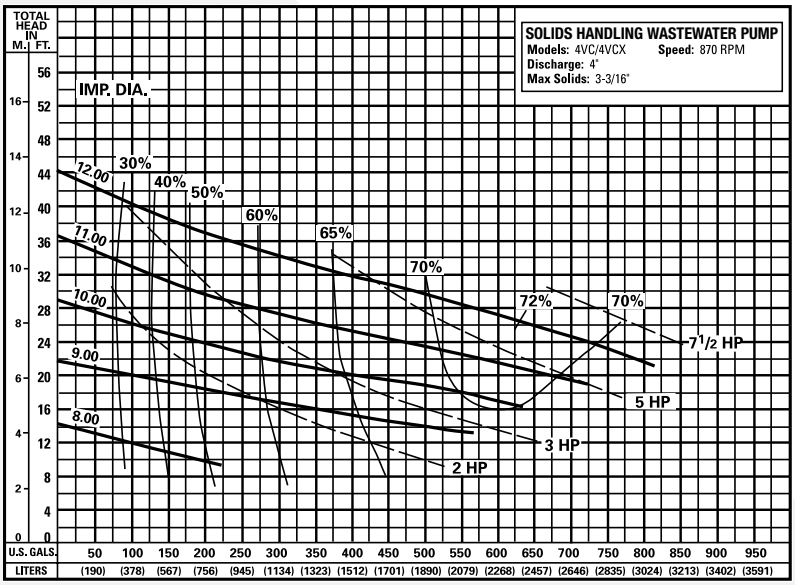

Pump performance is based on clear water (1.0 specific gravity @ 68°F) and pump fluid end (hydraulic) efficiency. Motor data based on 40°C ambient temperature.

Available Models		Motor Electrical Data												
Standard	Hazardous Location	HP	Volts	Phase	Hertz	Start Amps	Run Amps	Service Factor Amps	Run kW	Service Factor kW	Start KVA	Run KVA	NEC Code Letter	Service Factor
4VC20M8-03	4VCX20M8-03	2	200	3	60	103.5	15.1	18.1	2.7	3.3	36.0	3.8	K	1.2
4VC20M8-23	4VCX20M8-23	2	230	3	60	90	13.3	16	2.7	3.3	36.0	3.8	K	1.2
4VC20M8-43	4VCX20M8-43	2	460	3	60	45	6.7	8	2.7	3.3	36.0	3.8	K	1.2
4VC20M8-53	4VCX20M8-53	2	575	3	60	36	5.3	6.4	2.7	3.3	36.0	3.8	K	1.2
4VC30M8-03	4VCX30M8-03	3	200	3	60	103.5	16.7	20	3.9	4.8	36.0	5.4	H	1.2
4VC30M8-23	4VCX30M8-23	3	230	3	60	90	14.7	17.6	3.9	4.8	36.0	5.4	H	1.2
4VC30M8-43	4VCX30M8-43	3	460	3	60	45	7.3	8.7	3.9	4.8	36.0	5.4	H	1.2
4VC30M8-53	4VCX30M8-53	3	575	3	60	36	5.8	6.7	3.9	4.8	36.0	5.4	H	1.2
4VC50M8-03	4VCX50M8-03	5	200	3	60	103.5	24.1	28.8	6.0	7.3	36.0	8.4	J	1.2
4VC50M8-23	4VCX50M8-23	5	230	3	60	90	21	25	6.0	7.3	36.0	8.4	J	1.2
4VC50M8-43	4VCX50M8-43	5	460	3	60	45	10.5	12.5	6.0	7.3	36.0	8.4	J	1.2
4VC50M8-53	4VCX50M8-53	5	575	3	60	36	8.4	10	6.0	7.3	36.0	8.4	J	1.2
4VC75M8-03	4VCX75M8-03	7.5	200	3	60	149	30.3	36.8	7.7	9.4	52.0	10.6	H	1.2
4VC75M8-23	4VCX75M8-23	7.5	230	3	60	130	26.4	32	7.7	9.4	52.0	10.6	H	1.2
4VC75M8-43	4VCX75M8-43	7.5	460	3	60	65	13.2	16	7.7	9.4	52.0	10.6	H	1.2
4VC75M8-53	4VCX75M8-53	7.5	575	3	60	52	10.6	12.8	7.7	9.4	52.0	10.6	H	1.2

Motor Efficiencies and Power Factor									
		Motor Efficiency %				Power Factor %			
HP	Phase	Service Factor Load	100% Load	75% Load	50% Load	Service Factor Load	100% Load	75% Load	50% Load
2	3	73	72	67	59	72	71	65	55
3	3	74	73	69	62	73	72	66	57
5	3	83	81	76.5	67.5	73	72	66.5	58
7.5	3	83.5	82	77	69	74	73	68	60

Performance Data

1150 RPM

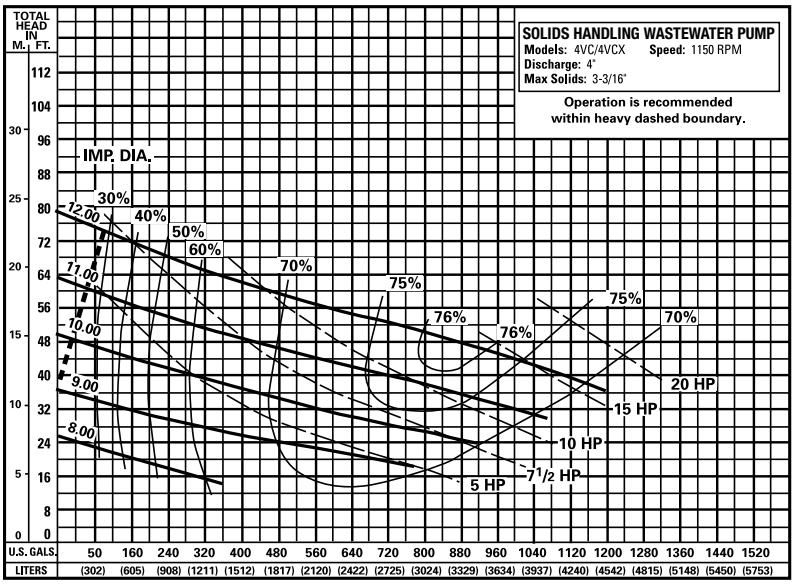

Pump performance is based on clear water (1.0 specific gravity @ 68°F) and pump fluid end (hydraulic) efficiency. Motor data based on 40°C ambient temperature.

Available Models		Motor Electrical Data												
Standard	Hazardous Location	HP	Volts	Phase	Hertz	Start Amps	Run Amps	Service Factor Amps	Run kW	Service Factor kW	Start KVA	Run KVA	NEC Code Letter	Service Factor
4VC50M6-03	4VCX50M6-03	5	200	3	60	106	19.3	23	4.8	5.8	36.7	6.7	J	1.2
4VC50M6-23	4VCX50M6-23	5	230	3	60	92	16.8	20	4.8	5.8	36.7	6.7	J	1.2
4VC50M6-43	4VCX50M6-43	5	460	3	60	46	8.4	10	4.8	5.8	36.7	6.7	J	1.2
4VC50M6-53	4VCX50M6-53	5	575	3	60	37	6.7	8	4.8	5.8	36.7	6.7	J	1.2
4VC75M6-03	4VCX75M6-03	7.5	200	3	60	197	27	32.2	6.8	8.4	68.5	9.4	H	1.2
4VC75M6-23	4VCX75M6-23	7.5	230	3	60	172	23.6	28	6.8	8.4	68.5	9.4	H	1.2
4VC75M6-43	4VCX75M6-43	7.5	460	3	60	86	11.8	14	6.8	8.4	68.5	9.4	H	1.2
4VC75M6-53	4VCX75M6-53	7.5	575	3	60	69	9.4	11.2	6.8	8.4	68.5	9.4	H	1.2
4VC100M6-03	4VCX100M6-03	10	200	3	60	197	34.3	41.4	8.8	10.9	68.5	12.0	H	1.2
4VC100M6-23	4VCX100M6-23	10	230	3	60	172	30	36	8.8	10.9	68.5	12.0	H	1.2
4VC100M6-43	4VCX100M6-43	10	460	3	60	86	15	18	8.8	10.9	68.5	12.0	H	1.2
4VC100M6-53	4VCX100M6-53	10	575	3	60	69	12	14.4	8.8	10.9	68.5	12.0	H	1.2
4VC150M6-03	4VCX150M6-03	15	200	3	60	276	48	59.8	13.0	15.7	95.6	17.5	H	1.2
4VC150M6-23	4VCX150M6-23	15	230	3	60	240	44	52	13.0	15.7	95.6	17.5	H	1.2
4VC150M6-43	4VCX150M6-43	15	460	3	60	120	22	26	13.0	15.7	95.6	17.5	H	1.2
4VC150M6-53	4VCX150M6-53	15	575	3	60	96	17.6	20.8	13.0	15.7	95.6	17.5	H	1.2
4VC200M6-03	4VCX200M6-03	20	200	3	60	333	66.3	80.5	17.2	21.4	115.5	23.0	G	1.2
4VC200M6-23	4VCX200M6-23	20	230	3	60	290	58	70	17.2	21.4	115.5	23.0	G	1.2
4VC200M6-43	4VCX200M6-43	20	460	3	60	145	29	35	17.2	21.4	115.5	23.0	G	1.2
4VC200M6-53	4VCX200M6-53	20	575	3	60	116	23	28	17.2	21.4	115.5	23.0	G	1.2

Motor Efficiencies and Power Factor									
		Motor Efficiency %				Power Factor %			
HP	Phase	Service Factor Load	100% Load	75% Load	50% Load	Service Factor Load	100% Load	75% Load	50% Load
5	3	82	81	77	68	74	72	66	56
7.5	3	84	83	79	71	75	73	66.5	56.5
10	3	87	86	82	75	76	74	67	57
15	3	88	88	86.5	82.5	76	74.5	68	57.5
20	3	88	88	87	83	77	75	69	59

Performance Data

1750 RPM

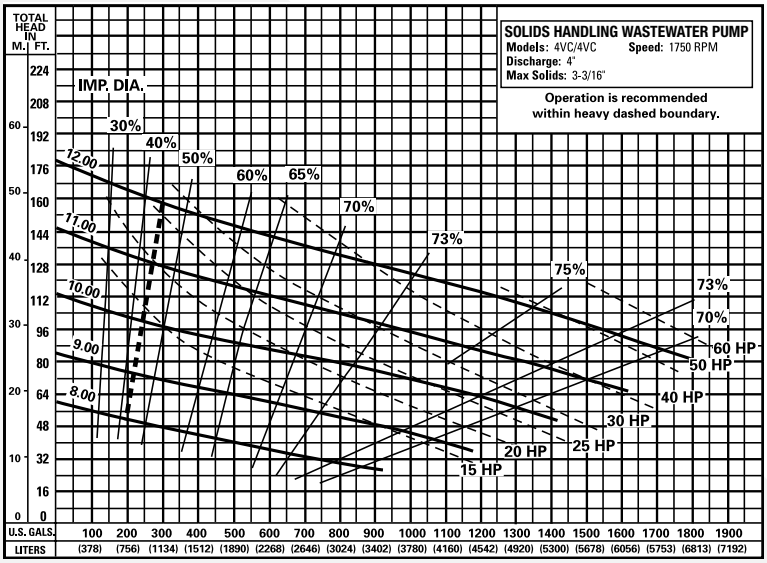

Pump performance is based on clear water (1.0 specific gravity @ 68°F) and pump fluid end (hydraulic) efficiency. Motor data based on 40°C ambient temperature.

Available Models		Motor Electrical Data												
Standard	Hazardous Location	HP	Volts	Phase	Hertz	Start Amps	Run Amps	Service Factor Amps	Run kW	Service Factor kW	Start KVA	Run KVA	NEC Code Letter	Service Factor
4VC150M4-03	4VCX150M4-03	15	200	3	60	334	50.6	61	15.0	18.6	115.5	17.5	E	1.2
4VC150M4-23	4VCX150M4-23	15	230	3	60	290	44	53	15.0	18.6	115.5	17.5	E	1.2
4VC150M4-43	4VCX150M4-43	15	460	3	60	145	22	26.5	15.0	18.6	115.5	17.5	E	1.2
4VC150M4-53	4VCX150M4-53	15	575	3	60	116	17.6	21.2	15.0	18.6	115.5	17.5	E	1.2
4VC200M4-03	4VCX200M4-03	20	200	3	60	334	69	82.8	21.2	26.1	115.5	23.9	G	1.2
4VC200M4-23	4VCX200M4-23	20	230	3	60	290	60	72	21.2	26.1	115.5	23.9	G	1.2
4VC200M4-43	4VCX200M4-43	20	460	3	60	145	30	36	21.2	26.1	115.5	23.9	G	1.2
4VC200M4-53	4VCX200M4-53	20	575	3	60	116	24	28.8	21.2	26.1	115.5	23.9	G	1.2
4VC250M4-03	4VCX250M4-03	25	200	3	60	575	78.3	92.2	26.9	33.3	180.1	30.3	G	1.2
4VC250M4-23	4VCX250M4-23	25	230	3	60	452	76	92	26.9	33.3	180.1	30.3	G	1.2
4VC250M4-43	4VCX250M4-43	25	460	3	60	226	38	46	26.9	33.3	180.1	30.3	G	1.2
4VC250M4-53	4VCX250M4-53	25	575	3	60	181	30.4	36.8	26.9	33.3	180.1	30.3	G	1.2
4VC300M4-03	4VCX300M4-03	30	200	3	60	575	103.9	124	33.3	41.3	180.1	37.4	G	1.2
4VC300M4-23	4VCX300M4-23	30	230	3	60	452	94	114	33.3	41.3	180.1	37.4	G	1.2
4VC300M4-43	4VCX300M4-43	30	460	3	60	226	47	57	33.3	41.3	180.1	37.4	G	1.2
4VC300M4-53	4VCX300M4-53	30	575	3	60	181	37.6	45.6	33.3	41.3	180.1	37.4	G	1.2
4VC400M4-23	4VCX400M4-23	40	230	3	60	580	122	148	43.2	53.0	231.1	48.6	G	1.2
4VC400M4-43	4VCX400M4-43	40	460	3	60	290	61	74	43.2	53.0	231.1	48.6	G	1.2
4VC400M4-53	4VCX400M4-53	40	575	3	60	232	48.8	59.2	43.2	53.0	231.1	48.6	G	1.2
4VC500M4-43	4VCX500M4-43	50	460	3	60	290	67	79	46.9	54.6	231.1	53.4	E	1.2
4VC500M4-53	4VCX500M4-53	50	575	3	60	232	54	63	46.9	54.6	231.1	53.4	E	1.2
4VC600M4-43	4VCX600M4-43	60	460	3	60	290	79	79	52.8	52.8	231.1	62.9	C	1.0
4VC600M4-53	4VCX600M4-53	60	575	3	60	232	63	63	52.8	52.8	231.1	62.9	C	1.0

Motor Efficiencies and Power Factor									
		Motor Efficiency %				Power Factor %			
HP	Phase	Service Factor Load	100% Load	75% Load	50% Load	Service Factor Load	100% Load	75% Load	50% Load
15	3	85	84	79	69	88	86	78	68
20	3	88	87.5	81	72.5	91	89	79	69
25	3	87	86	81	73	91	89	80	70
30	3	87	86	83	79	91	89	82	73
40	3	86	86	88	87.5	90	89	86	80
50	3	87	86	86.5	88	87	88	88.5	84
60	3	87	87	86	88	84	84	89	86

Dimensions

[Dimensions in mm]

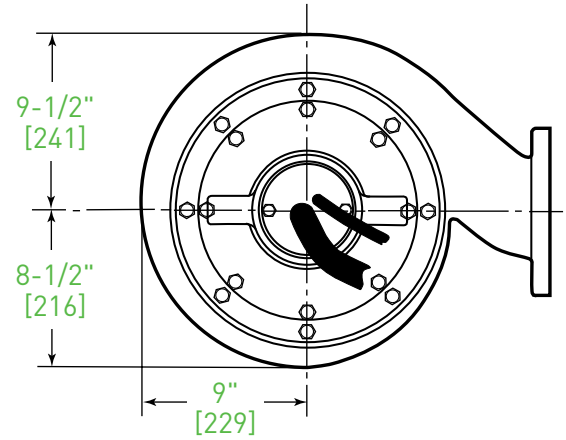

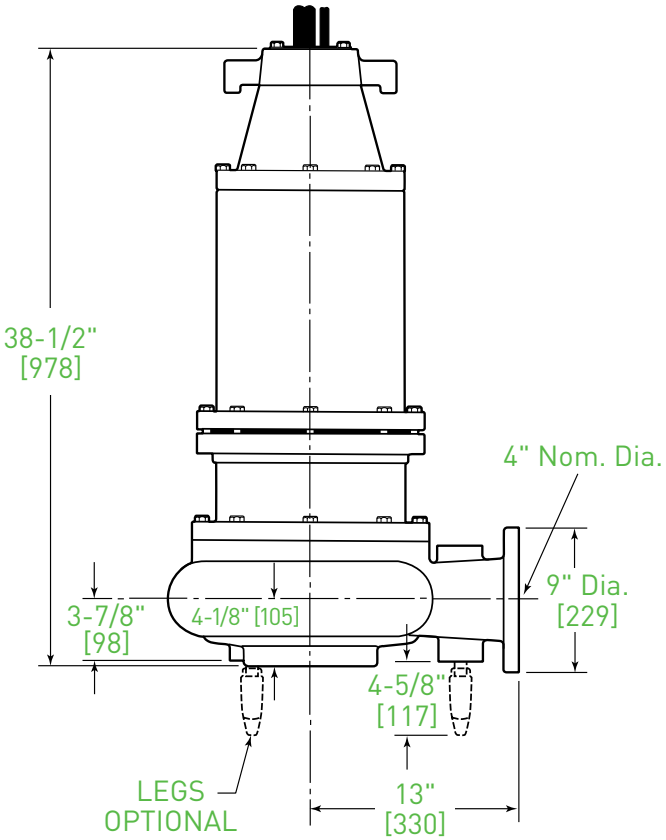

740 EAST 9TH STREET,
ASHLAND, OHIO 44805
WWW.FEMYERS.COM

269 TRILLIUM DRIVE, KITCHENER,
ONTARIO, CANADA N2G 4W5
WWW.FEMYERS.COM

Because we are continuously improving our products and services, Pentair reserves the right to change specifications without prior notice.
K3421 1/8/13 © 2013 Pentair Ltd. All Rights Reserved.

Attachment B

MYERS/Pentair 8VL/8VLX Pump Data Sheets

PENTAIR

Customer : Alex Park
Project name : Exhibit 4

Pump Performance Datasheet

Encompass 2.0 - 17.2.1.0

Item number	: Default	Size	: Myers - 8VL/8VLX
Service	:	Stages	: 1
Quantity	: 1	Based on curve number	: SUB_S_E_AH_00017_F_4 Rev 2012-03-23
Quote number	:	Date last saved	: 18 May 2017 7:55 PM

Operating Conditions

Flow, rated	: 3,500.0 USgpm
Differential head / pressure, rated (requested)	: 60.00 ft
Differential head / pressure, rated (actual)	: 61.22 ft
Suction pressure, rated / max	: 0.00 / 0.00 psi.g
NPSH available, rated	: Ample
Frequency	: 60 Hz

Performance

Speed, rated	: 1750 rpm
Impeller diameter, rated	: 11.88 in
Impeller diameter, maximum	: 14.50 in
Impeller diameter, minimum	: 11.63 in
Efficiency	: 64.59 %
NPSH required / margin required	: - / 0.00 ft
nq (imp. eye flow) / S (imp. eye flow)	: 52 / - Metric units
Minimum Continuous Stable Flow	: 727.8 USgpm
Head, maximum, rated diameter	: 117.1 ft
Head rise to shutoff	: 95.23 %
Flow, best eff. point	: 2,546.8 USgpm
Flow ratio, rated / BEP	: 137.43 %
Diameter ratio (rated / max)	: 81.90 %
Head ratio (rated dia / max dia)	: 46.08 %
Cq/Ch/Ce/Cn [ANSI/HI 9.6.7-2010]	: 1.00 / 1.00 / 1.00 / 1.00
Selection status	: Acceptable

Liquid

Liquid type	: Water
Additional liquid description	:
Solids diameter, max	: 0.00 in
Solids concentration, by volume	: 0.00 %
Temperature, max	: 68.00 deg F
Fluid density, rated / max	: 1.000 / 1.000 SG
Viscosity, rated	: 1.00 cP
Vapor pressure, rated	: 0.34 psi.a

Material

Material selected	: Standard

Pressure Data

Maximum working pressure	: 50.70 psi.g
Maximum allowable working pressure	: N/A
Maximum allowable suction pressure	: N/A
Hydrostatic test pressure	: N/A

Driver & Power Data (@Max density)

Driver sizing specification	: Maximum power
Margin over specification	: 0.00 %
Service factor	: 1.00
Power, hydraulic	: 53.02 hp
Power, rated	: 82.08 hp
Power, maximum, rated diameter	: 92.44 hp
Minimum recommended motor rating	: 100 hp / 74.57 kW

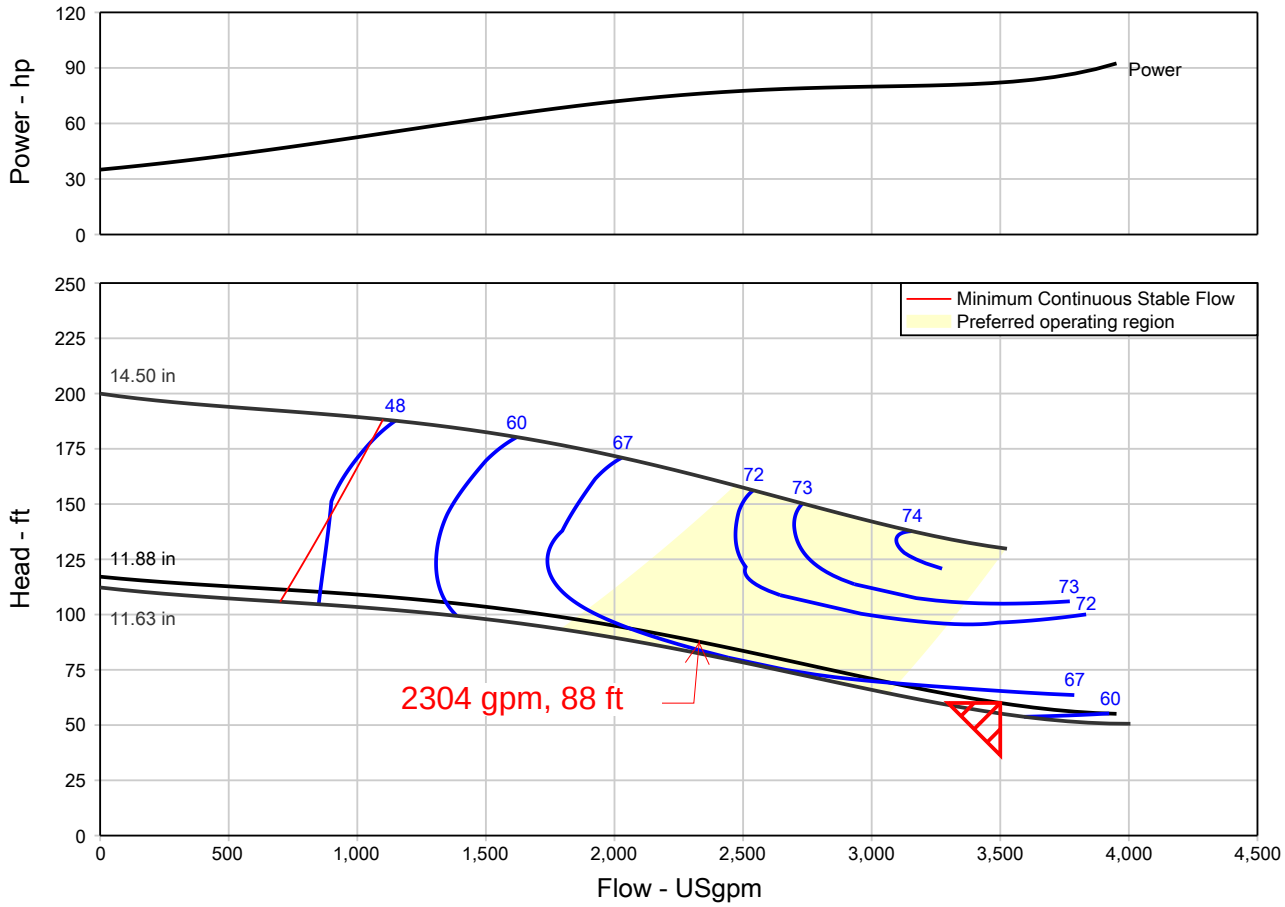

Customer : Alex Park
Project name : Exhibit 6

Pump Performance Datasheet

Encompass 2.0 - 17.2.1.0

Item number	: Default	Size	: Myers - 8VL/8VLX
Service	:	Stages	: 1
Quantity	: 1	Based on curve number	: SUB_S_E_AH_00017_F_4 Rev 2012-03-23
Quote number	:	Date last saved	: 18 May 2017 6:53 PM

Operating Conditions

Flow, rated	: 2,400.0 USgpm
Differential head / pressure, rated (requested)	: 115.0 ft
Differential head / pressure, rated (actual)	: 117.7 ft
Suction pressure, rated / max	: 0.00 / 0.00 psi.g
NPSH available, rated	: Ample
Frequency	: 60 Hz

Performance

Speed, rated	: 1750 rpm
Impeller diameter, rated	: 13.00 in
Impeller diameter, maximum	: 14.50 in
Impeller diameter, minimum	: 11.63 in
Efficiency	: 71.54 %
NPSH required / margin required	: - / 0.00 ft
nq (imp. eye flow) / S (imp. eye flow)	: 52 / - Metric units
Minimum Continuous Stable Flow	: 877.2 USgpm
Head, maximum, rated diameter	: 148.2 ft
Head rise to shutoff	: 28.86 %
Flow, best eff. point	: 2,793.1 USgpm
Flow ratio, rated / BEP	: 85.93 %
Diameter ratio (rated / max)	: 89.66 %
Head ratio (rated dia / max dia)	: 71.65 %
Cq/Ch/Ce/Cn [ANSI/HI 9.6.7-2010]	: 1.00 / 1.00 / 1.00 / 1.00
Selection status	: Acceptable

Liquid

Liquid type	: Water
Additional liquid description	:
Solids diameter, max	: 0.00 in
Solids concentration, by volume	: 0.00 %
Temperature, max	: 68.00 deg F
Fluid density, rated / max	: 1.000 / 1.000 SG
Viscosity, rated	: 1.00 cP
Vapor pressure, rated	: 0.34 psi.a

Material

Material selected	: Standard

Pressure Data

Maximum working pressure	: 64.13 psi.g
Maximum allowable working pressure	: N/A
Maximum allowable suction pressure	: N/A
Hydrostatic test pressure	: N/A

Driver & Power Data (@Max density)

Driver sizing specification	: Maximum power
Margin over specification	: 0.00 %
Service factor	: 1.00
Power, hydraulic	: 69.68 hp
Power, rated	: 97.40 hp
Power, maximum, rated diameter	: 113 hp
Minimum recommended motor rating	: 125 hp / 93.21 kW

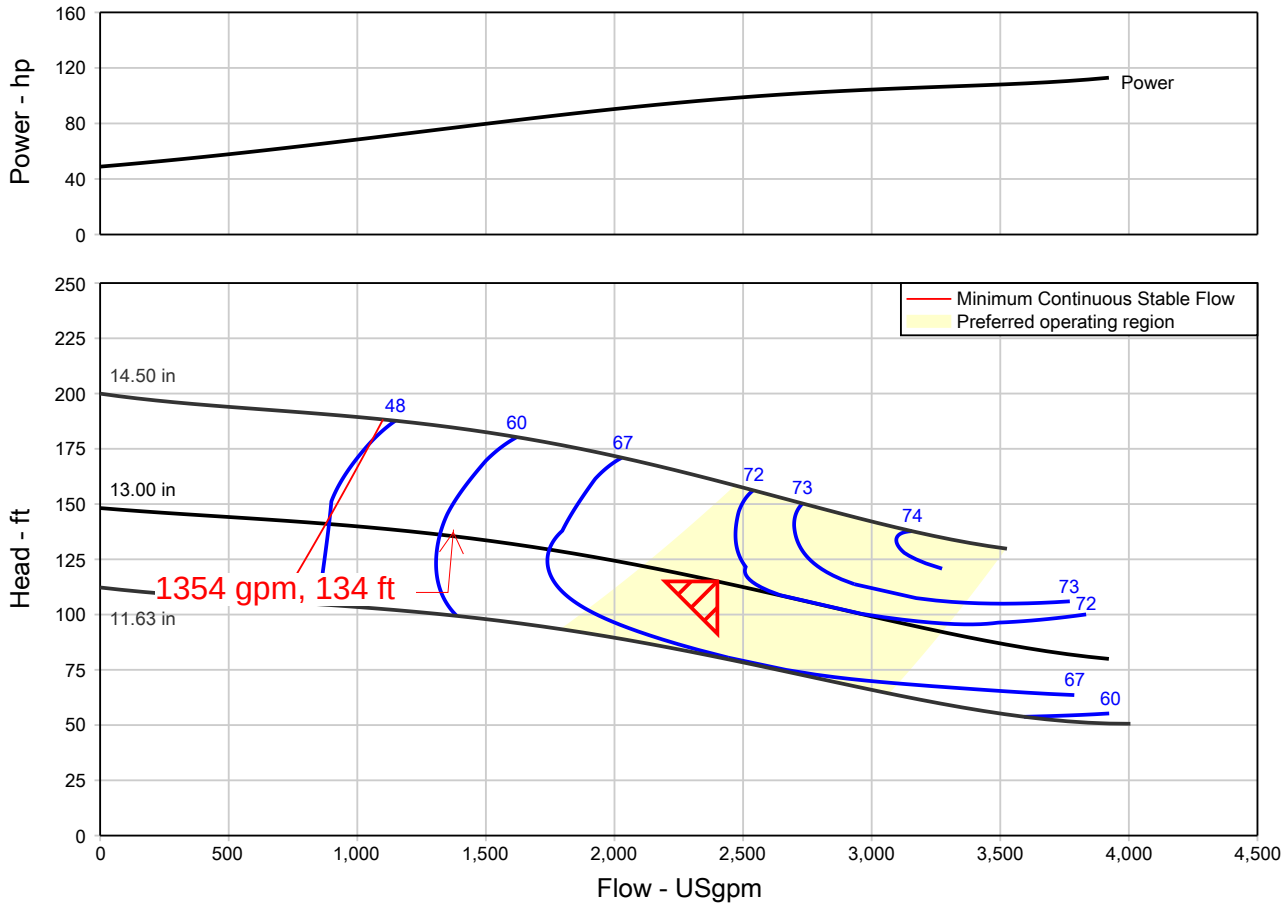

PENTAIR

Customer : Alex Park
Project name : Exhibit 8

Pump Performance Datasheet

Encompass 2.0 - 17.2.1.0

Item number	: Default	Size	: Myers - 8VL/8VLX
Service	:	Stages	: 1
Quantity	: 1	Based on curve number	: SUB_S_E_AH_00017_F_4 Rev 2012-03-23
Quote number	:	Date last saved	: 18 May 2017 7:59 PM

Operating Conditions

Flow, rated	: 3,500.0 USgpm
Differential head / pressure, rated (requested)	: 65.00 ft
Differential head / pressure, rated (actual)	: 67.31 ft
Suction pressure, rated / max	: 0.00 / 0.00 psi.g
NPSH available, rated	: Ample
Frequency	: 60 Hz

Performance

Speed, rated	: 1750 rpm
Impeller diameter, rated	: 12.13 in
Impeller diameter, maximum	: 14.50 in
Impeller diameter, minimum	: 11.63 in
Efficiency	: 66.84 %
NPSH required / margin required	: - / 0.00 ft
nq (imp. eye flow) / S (imp. eye flow)	: 52 / - Metric units
Minimum Continuous Stable Flow	: 756.4 USgpm
Head, maximum, rated diameter	: 122.4 ft
Head rise to shutoff	: 88.38 %
Flow, best eff. point	: 2,543.6 USgpm
Flow ratio, rated / BEP	: 137.60 %
Diameter ratio (rated / max)	: 83.62 %
Head ratio (rated dia / max dia)	: 49.92 %
Cq/Ch/Ce/Cn [ANSI/HI 9.6.7-2010]	: 1.00 / 1.00 / 1.00 / 1.00
Selection status	: Acceptable

Liquid

Liquid type	: Water
Additional liquid description	:
Solids diameter, max	: 0.00 in
Solids concentration, by volume	: 0.00 %
Temperature, max	: 68.00 deg F
Fluid density, rated / max	: 1.000 / 1.000 SG
Viscosity, rated	: 1.00 cP
Vapor pressure, rated	: 0.34 psi.a

Material

Material selected	: Standard

Pressure Data

Maximum working pressure	: 52.99 psi.g
Maximum allowable working pressure	: N/A
Maximum allowable suction pressure	: N/A
Hydrostatic test pressure	: N/A

Driver & Power Data (@Max density)

Driver sizing specification	: Maximum power
Margin over specification	: 0.00 %
Service factor	: 1.00
Power, hydraulic	: 57.43 hp
Power, rated	: 85.93 hp
Power, maximum, rated diameter	: 91.23 hp
Minimum recommended motor rating	: 100 hp / 74.57 kW

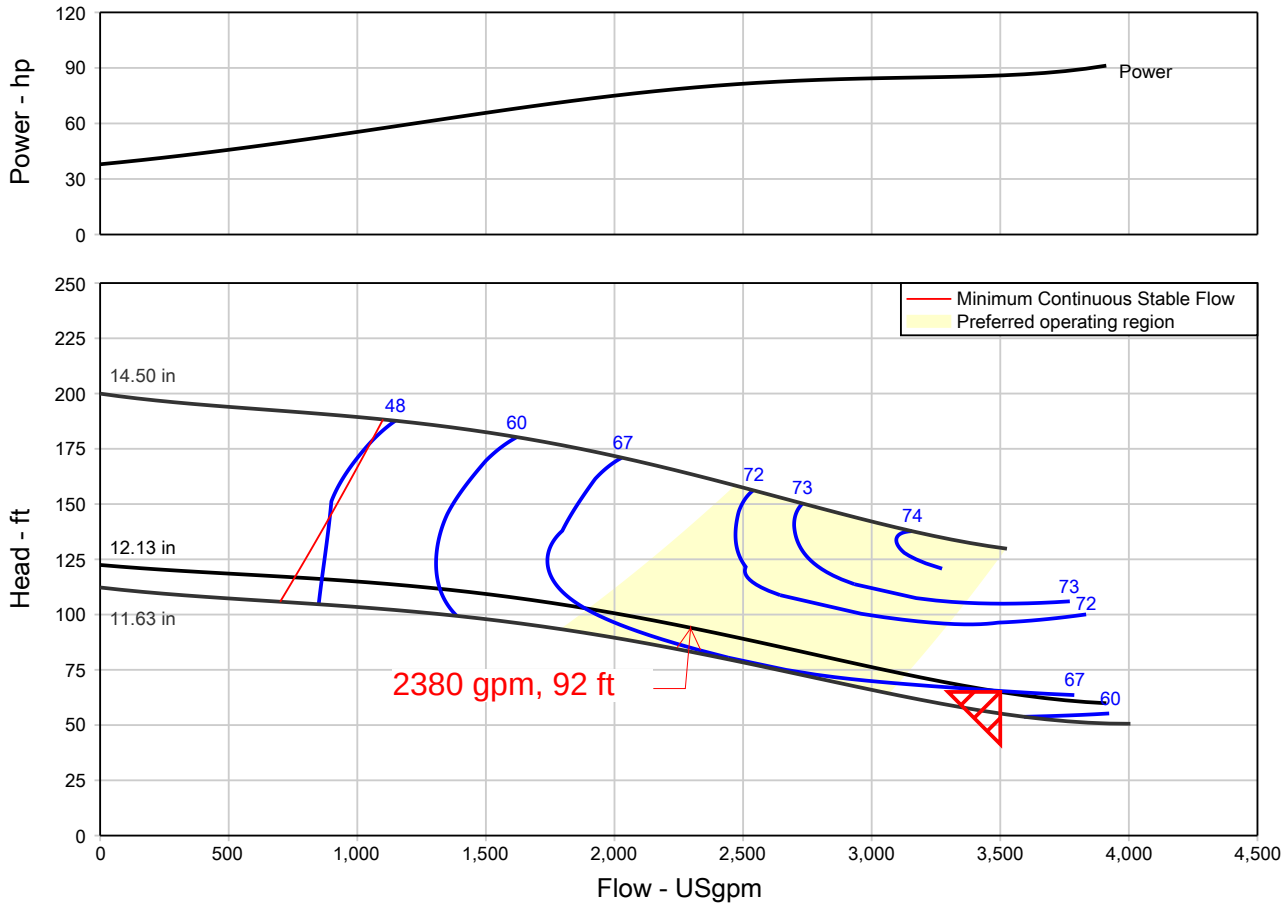

PENTAIR

MYERS®

Typical Installation

8VL and 8VLX

8” Submersible Solids Handling Wastewater Pump
Standard (8VL) and Hazardous Location (8VLX)

Slide Rail Dimensions (SRA/SRAX-88 Shown)

NOTE: Metric Dimensions in [MM]. Tolerance: ±1/8”.

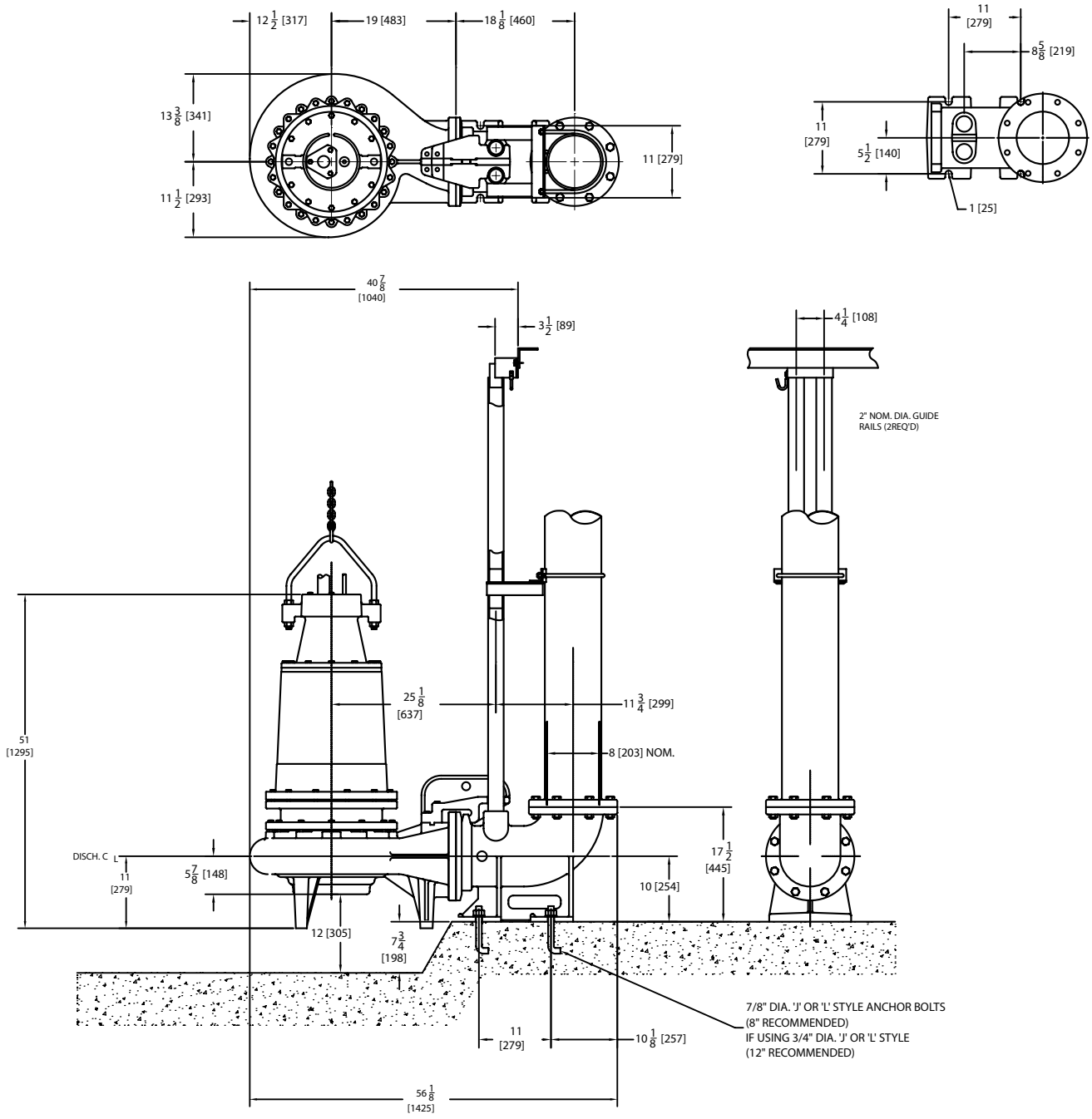

NOTE: if increasing pipe at elbow eccentric reducer is required.

PENTAIR

MYERS®

MODELS 8VL & 8VLX

8" SUBMERSIBLE SOLIDS HANDLING WASTEWATER PUMPS

STANDARD (8VL) AND HAZARDOUS LOCATION (8VLX) CONSTRUCTION

FM APPROVED

WWW.FEMYERS.COM

MYERS® MODELS 8VL & 8VLX
8" Submersible Solids Handling Wastewater Pumps

Designed Especially for High Flow Applications

The Myers 8VL submersible solids handling sewage pumps are designed especially for high flow applications such as large municipal lift stations, treatment plants, transfer stations and dewatering. A quick removal type rail system is available to simplify installation and maintenance.

The 8VL's ability to handle solids up to 4 inches in diameter and 3 available motor speeds make it ideal for most high flow wastewater applications. For more information, contact your Myers distributor or the Myers sales office at 419-289-1144.

Product Capabilities		
Capacities To	3875 gpm	14667 lpm
Heads To	170 ft.	51.8 m
Solids Handling (dia.)	4 in.	101.6 mm
Liquids Handling	raw, unscreened sewage, drain water, effluent	
Intermittent Liquid Temp.	up to 140˚F	up to 60˚C
Winding Insulation Temp. (Class H)	356˚F	180˚C
Available Motors	1750 RPM: 75, 100, 125 hp, 3 ph 460 & 575 volts, 60 Hz 1150 RPM: 30, 40, 50 hp, 3 ph 230, 460, 575 volts, 60 Hz; 60 hp, 3 ph, 460 & 575 volts, 60 Hz 870 RPM: 15, 20, 25 hp, 3 ph 208, 230, 460 & 575 volts, 60 Hz	
Std. Third Party Approvals Optional Approvals	CSA FM, Class 1, Groups C & D	
Acceptable pH Range	6 – 9	
Specific Gravity	.9 – 1.1	
Viscosity	28 – 35 SSU	
Horizontal Discharge	8 in.	203.2 mm

Construction Materials	
Motor Housing, Seal Housing, Cord Cap and Volute Case	cast iron, Class 30, ASTM A48
Enclosed 2-Vane Impeller	ductile iron, Class 65, ASTM A536
Power Cord	SOOW
Control Cord	W
Mechanical Seals: Standard Optional	 double tandem carbon and ceramic lower tungsten carbide
Pump, Motor Shaft	416 SST
Fasteners	300 Series SST
Case Wear Ring	bronze

Note: Consult factory for applications outside these recommendations.

Pump Features and Applications

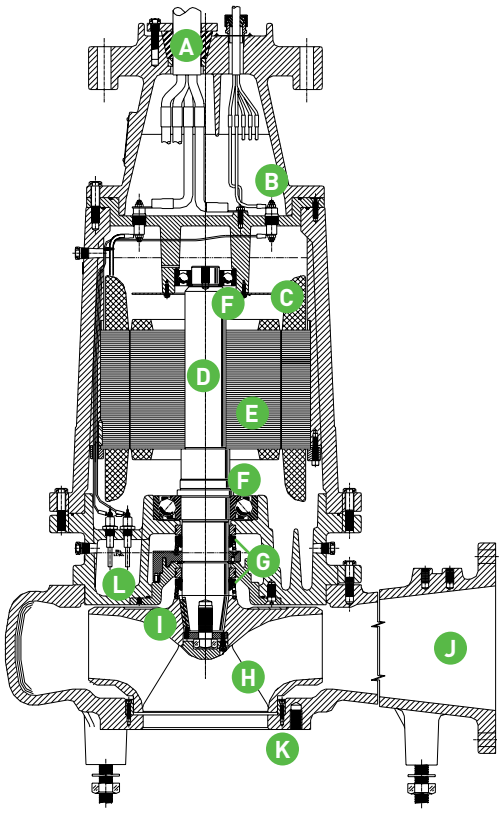

A. Cable Entry System

Cable jackets sealed with clamped, rubber grommet. Individual wires sealed with epoxy to prevent wicking in case of cable damage.

B. Terminal Board

Provides easy connections from power and control cables to stator. Allows voltage change in field on dual winding motors.

C. Heat Sensor on Motor Winding

Opens to de-energize motor starter if winding temperature reaches 150°C. Automatic reset.

D. Heavy 416 SST Shaft

Reduces deflection from impeller radial loads. Tapered and keyed to accept impeller.

E. Motor Stator

Oil-filled for continuous lubrication of bearings and seals. Class H insulation.

F. Upper & Lower Ball Bearings

G. Double Tandem Shaft Seals

Protect motor, operate in clean oil.

H. High Efficiency Impeller

Two-vane, rounded port, solids handling design. Passes 4" spherical solids.

I. Pump-Out Vanes

Help keep trash from seal, reduces pressure at seal faces.

J. Horizontal Discharge Volute Case

8" 125 lb. flange.

K. Bronze Wear Ring

Reduces bypass leakage and wear. Replaceable to restore original running clearances and pump efficiencies.

L. Dual Seal Leak Probes

Detect water in seal housing. Activates warning light in control panel.

High Efficiency Hydraulic Design Cuts Pumping Costs and Extends Life of Fluid End Components.

- Two-vane, rounded port impellers handle solids with ease at high operating efficiencies.
- Modified, constant velocity volute offers quiet operation, low radial loads over extended portion of performance curve.

Durable Motor Will Deliver Many Years of Reliable Service.

- Oil-filled motor and seal cavity for maximum heat dissipation and continuous bearing lubrication.
- Heat sensor thermostats embedded in windings protect motor from overheat conditions.
- Seal leak probes warn of moisture entry; help prevent costly motor burn-out.

Performance Data

870 RPM

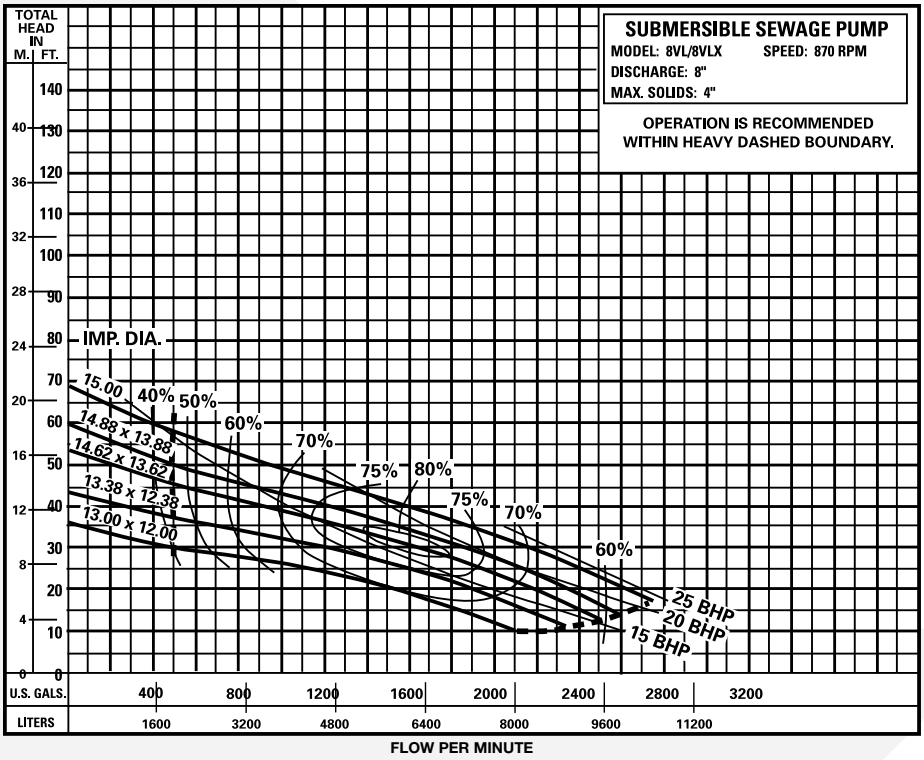

Available Models		Motor Electrical Data												
Standard	Hazardous Location	HP	Volts	Phase	Hertz	Start Amps	Run Amps	Service Factor Amps	Run kW	Service Factor kW	Start KVA	Run KVA	NEC Code Letter	Service Factor
8VL150M8-03	8VLX150M8-03	15	200	3	60	334	53.4	61.2	13.4	15.8	116	18.5	J	1.2
8VL150M8-23	8VLX150M8-23	15	230	3	60	290	46.4	53.2	13.4	15.8	116	18.5	J	1.2
8VL150M8-43	8VLX150M8-43	15	460	3	60	145	23.2	26.6	13.4	15.8	116	18.5	J	1.2
8VL150M8-53	8VLX150M8-53	15	575	3	60	116	18.6	21.3	13.4	15.8	116	18.5	J	1.2
8VL200M8-03	8VLX200M8-03	20	200	3	60	334	67.2	78.5	17.6	20.9	116	23.2	G	1.2
8VL200M8-23	8VLX200M8-23	20	230	3	60	290	58.4	68.3	17.6	20.9	116	23.2	G	1.2
8VL200M8-43	8VLX200M8-43	20	460	3	60	145	29.2	34.1	17.6	20.9	116	23.2	G	1.2
8VL200M8-53	8VLX200M8-53	20	575	3	60	116	23.3	27.3	17.6	20.9	116	23.2	G	1.2
8VL250M8-03	8VLX250M8-03	25	200	3	60	501	84.2	101.0	21.2	26.4	175	29.2	H	1.2
8VL250M8-23	8VLX250M8-23	25	230	3	60	436	73.2	87.8	21.2	26.4	175	29.2	H	1.2
8VL250M8-43	8VLX250M8-43	25	460	3	60	218	36.6	44.0	21.2	26.4	175	29.2	H	1.2
8VL250M8-53	8VLX250M8-53	25	575	3	60	174	29.3	35.1	21.2	26.4	175	29.2	H	1.2

Motor Efficiencies and Power Factor									
		Motor Efficiency %				Power Factor %			
HP	Phase	Service Factor Load	100% Load	75% Load	50% Load	Service Factor Load	100% Load	75% Load	50% Load
15	3	85.0	83.5	81.5	75	74.5	72.5	68.0	59.0
20	3	85.5	85.0	83.5	80	77.0	75.5	72.5	66.0
25	3	85.0	88.0	87.0	83	75.3	72.7	68.5	59.5

Performance Data

1150 RPM

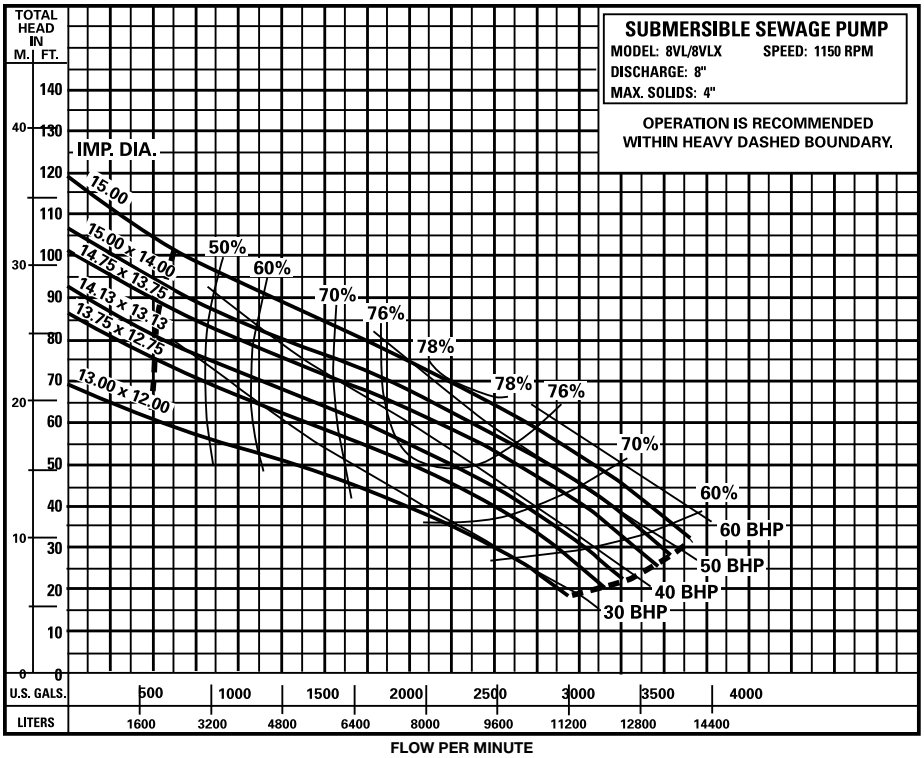

Available Models		Motor Electrical Data												
Standard	Hazardous Location	HP	Volts	Phase	Hertz	Start Amps	Run Amps	Service Factor Amps	Run kW	Service Factor kW	Start KVA	Run KVA	NEC Code Letter	Service Factor
8VL300M6-23	8VLX300M6-23	30	230	3	60	580	88.4	106.0	26.0	31.2	230	35.2	J	1.2
8VL300M6-43	8VLX300M6-43	30	460	3	60	290	44.2	53.0	26.0	31.2	230	35.2	J	1.2
8VL300M6-53	8VLX300M6-53	30	575	3	60	232	35.3	42.4	26.0	31.2	230	35.2	J	1.2
8VL400M6-23	8VLX400M6-23	40	230	3	60	580	110.4	132.5	34.3	41.2	230	44.0	G	1.2
8VL400M6-43	8VLX400M6-43	40	460	3	60	290	55.2	66.2	34.3	41.2	230	44.0	G	1.2
8VL400M6-53	8VLX400M6-53	40	575	3	60	232	44.2	53.0	34.3	41.2	230	44.0	G	1.2
8VL500M6-23	8VLX500M6-23	50	230	3	60	417	138.0	165.6	42.6	51.4	290	63.3	G	1.2
8VL500M6-43	8VLX500M6-43	50	460	3	60	363	69.0	82.8	42.6	51.4	290	63.3	G	1.2
8VL500M6-53	8VLX500M6-53	50	575	3	60	290	55.2	66.2	42.6	51.4	290	63.3	G	1.2
8VL600M6-43	8VLX600M6-43	60	460	3	60	405	82.7	101.0	51.4	62.7	323	65.9	F	1.2
8VL600M6-53	8VLX600M6-53	60	575	3	60	324	66.2	80.8	51.4	62.7	323	65.9	F	1.2

Motor Efficiencies and Power Factor									
		Motor Efficiency %				Power Factor %			
HP	Phase	Service Factor Load	100% Load	75% Load	50% Load	Service Factor Load	100% Load	75% Load	50% Load
30	3	86	86	84	79.0	73.9	73.8	67.8	55.0
40	3	87	87	86	82.5	78.0	78.0	73.8	65.2
50	3	87	88	87	85.0	78.0	77.5	77.5	68.0
60	3	86	87	87	86.0	78.0	78.0	78.0	72.5

Performance Data

1750 RPM

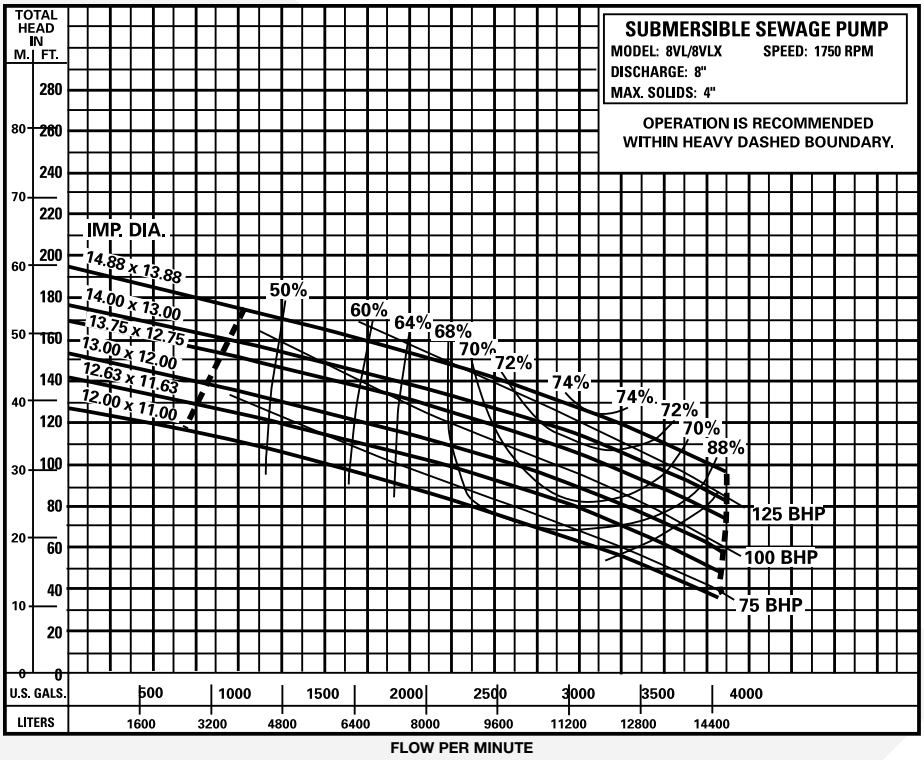

Available Models		Motor Electrical Data												
Standard	Hazardous Location	HP	Volts	Phase	Hertz	Start Amps	Run Amps	Service Factor Amps	Run kW	Service Factor kW	Start KVA	Run KVA	NEC Code Letter	Service Factor
8VL750M4-43	8VLX750M4-43	75	460	3	60	540	101.8	122.2	64.2	77	430	81.0	G	1.2
8VL750M4-53	8VLX750M4-53	75	575	3	60	432	81.4	97.8	64.2	77	430	81.0	G	1.2
8VL1000M4-43	8VLX1000M4-43	100	460	3	60	725	129.0	155.0	85.7	103	578	103.0	G	1.2
8VL1000M4-53	8VLX1000M4-53	100	575	3	60	580	103.2	124.0	85.7	103	578	103.0	G	1.2
8VL1250M4-43	8VLX1250M4-43	125	460	3	60	725	165.0	175.0	108.0	115	578	131.0	G	1.1
8VL1250M4-53	8VLX1250M4-53	125	575	3	60	580	132.0	140.0	108.0	115	578	131.0	G	1.1

Motor Efficiencies and Power Factor									
		Motor Efficiency %				Power Factor %			
HP	Phase	Service Factor Load	100% Load	75% Load	50% Load	Service Factor Load	100% Load	75% Load	50% Load
75	3	87.1	87.1	87.3	83.5	79.1	79.2	79.1	79
100	3	87.0	88.0	87.0	84.0	83.4	83.4	79.2	77
125	3	86.0	86.3	88.0	87.0	82.5	82.0	80.0	78

Dimensions [Dimensions in mm]

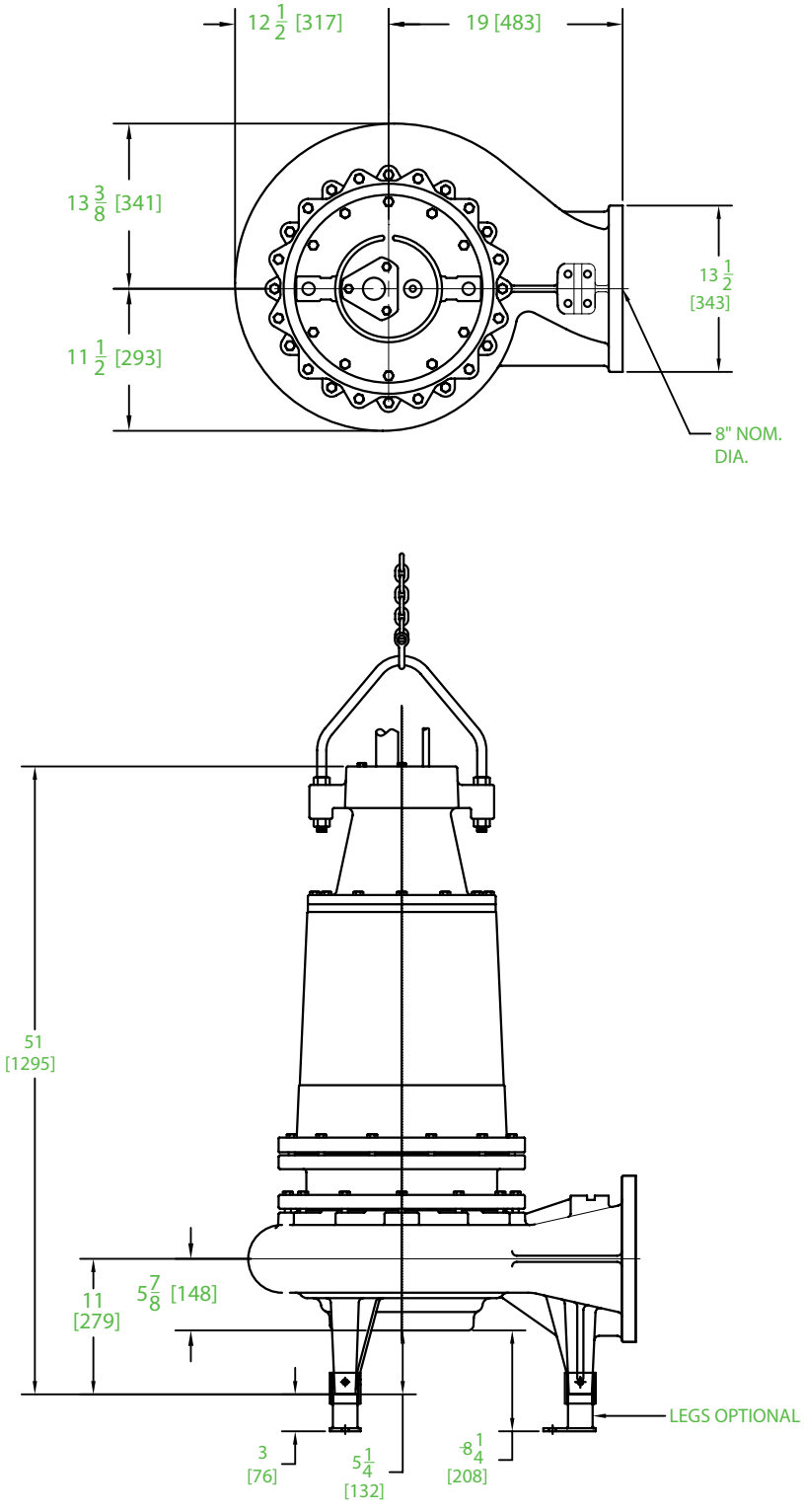

740 EAST 9TH STREET,
ASHLAND, OHIO 44805
WWW.FEMYERS.COM

269 TRILLIUM DRIVE, KITCHENER,
ONTARIO, CANADA N2G 4W5
WWW.FEMYERS.COM

Because we are continuously improving our products and services, Pentair reserves the right to change specifications without prior notice.
K3341 5/13/13 © 2013 Pentair Ltd. All Rights Reserved.

ATTACHMENT C

Placer County Typical Lift Station Design Drawings

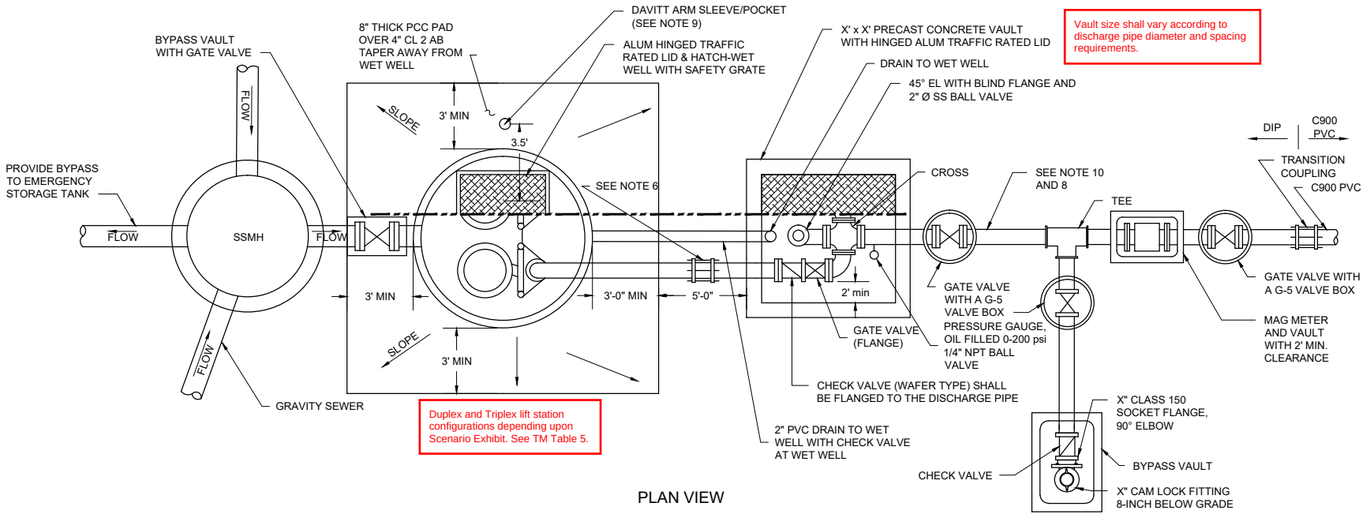

PLAN VIEW

SEWAGE LIFT STATION

NO SCALE

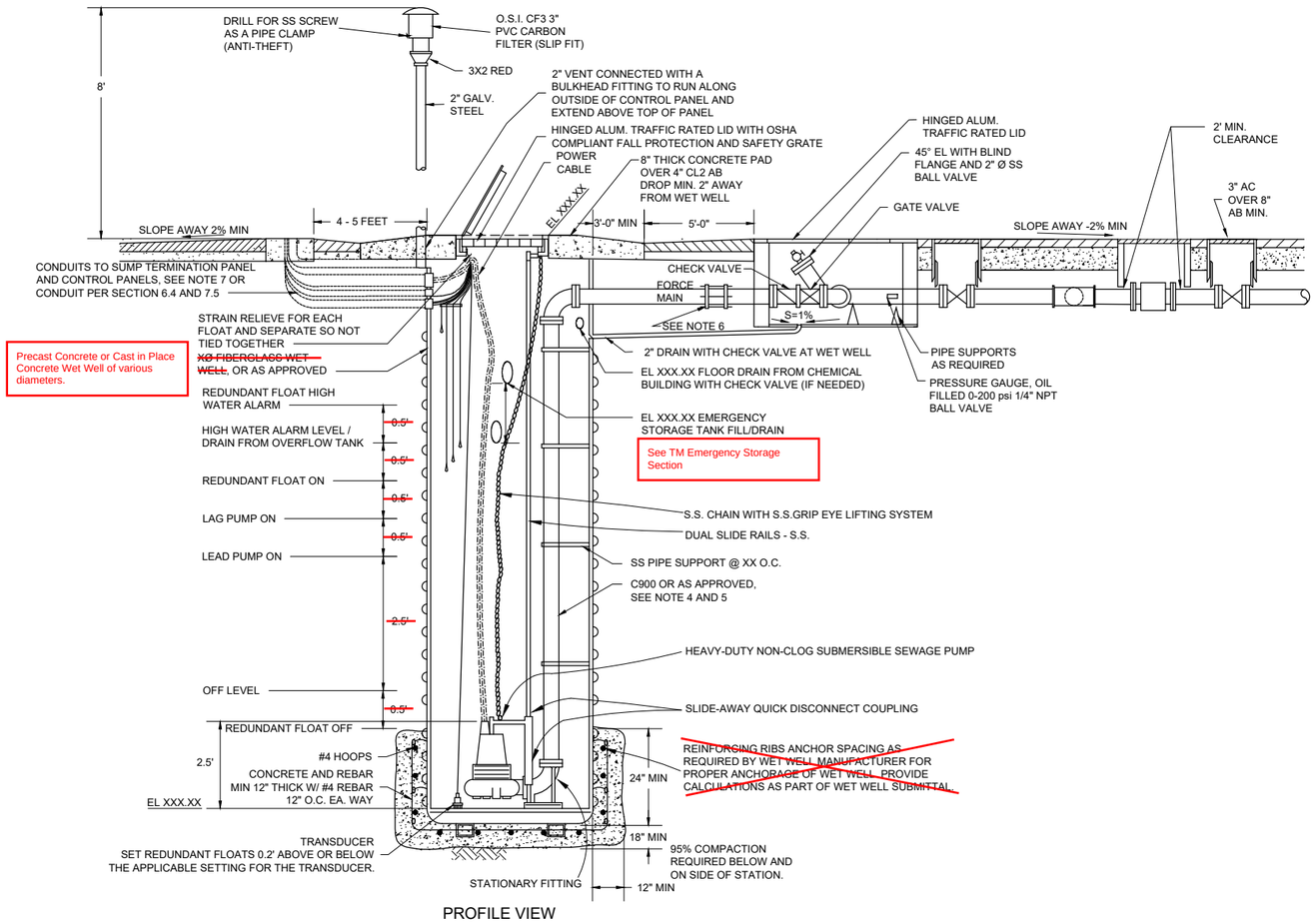

PROFILE VIEW

SEWAGE LIFT STATION

NO SCALE

NOTES:

1. PROVIDE KOR & SEAL BOOTS FOR ALL CONCRETE VAULT PIPE PENETRATIONS EXCEPT FOR 2" FLOOR DRAINS.
2. PROVIDE 2" FLOOR DRAINS FOR EACH VAULT WITH CHECK VALVE TO THE WET WELL. CAN COMBINE DRAINS TO ONE MAIN RUN WITH CLEANOUT FOR ONE DRAIN PENETRATION AT THE WET WELL.
3. PROVIDE PIPE SUPPORTS AT FLANGES ON EACH SIDE OF CONTROL VALVES AND THE FLOW METER FOR REMOVAL OF EQUIPMENT AND BELOW THE BYPASS CAM-LOCK FITTING.
4. INSIDE THE WET WELL PROVIDE C-900 FORCE MAIN PIPING FOR PIPE SIZES 6" AND SMALLER AND FOR WET WELLS LESS THAN 20-FEET DEEP.
5. INSIDE THE WET WELL PROVIDE PROTECTO401 COATED DIP FORCE MAIN PIPING FOR PIPE SIZES GREATER THAN 6" AND FOR WET WELLS GREATER THAN 20-FEET DEEP.
6. INSTALL A FLEXIBLE COUPLING ADAPTOR (AS APPROVED BY THE ENGINEER) BETWEEN THE WET WELL AND VALVE VAULT TO TRANSITION TO DIFFERENT PIPE MATERIAL.
7. PROVIDE SPARE CONDUITS - 1-1 1/2" AND 2 - 1"
8. ALL FORCE MAIN PIPING FROM THE TRANSITION COUPLING THROUGH THE CONCRETE VAULTS TO THE GATE VALVE DOWNSTREAM OF THE METER VAULT SHALL BE DUCTILE IRON PIPE WITH PROTECTO401 LINER.
9. USE A DBI SALA #8512828 (3" ID) SLEEVE OR EQUAL. SLEEVE LOCATED 42" FROM CENTER OF ACCESS HATCH.
10. DUAL FORCE MAINS MAY BE CONSIDERED IN SPECIAL CIRCUMSTANCES AS DESCRIBED IN SECTION 4.14 OF THE PUMP STATION DESIGN MANUAL. AN ALTERNATIVE PLAN VIEW FOR DUAL FORCE MAIN VALVES AND PIPING IS PROVIDED BELOW.

REGISTERED CIVIL ENGINEER

DATE

REGISTERED PROFESSIONAL ENGINEER — No. ----- Exp. mm-dd-yy — CIVIL — STATE OF CALIFORNIA

REQUIRED

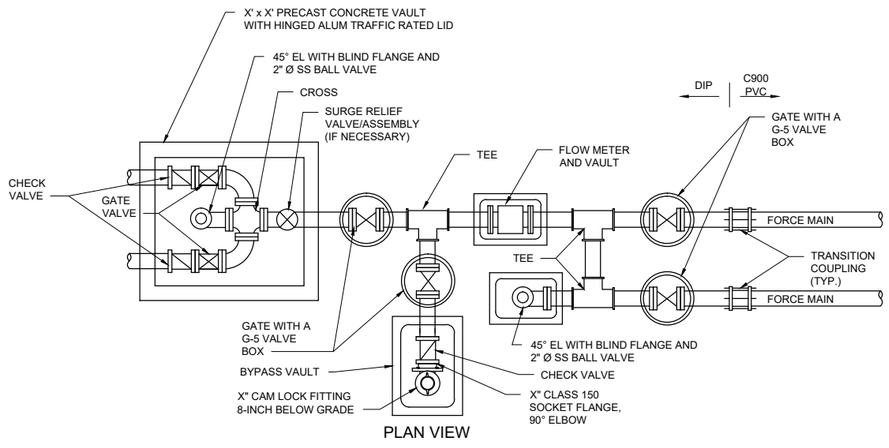

PLAN VIEW

DUAL FORCE MAIN

NO SCALE

CONCEPTUAL DESIGN - NOT FOR CONSTRUCTION

DATE:
DESIGNED:
DRAWN:
CHECKED:
REC DWG:

PROJECT NO.

DEPARTMENT OF FACILITY SERVICES
COUNTY OF PLACER

PROJECT NAME
LIFT STATION DETAILS 1

SHEET NO. 1/3

NOTES

1. REFER TO PUMP STATION DESIGN MANUAL FOR ADDITIONAL DESIGN REQUIREMENTS, MATERIAL, SPECIFICATIONS AND TESTING REQUIREMENTS.
2. MINIMUM 12" DIAMETER PIPE IS REQUIRED AT SPRING LINE TO INTERCONNECT MULTIPLE STORAGE TANKS. PIPING NOT REQUIRED FOR SINGLE STORAGE TANK CONFIGURATIONS.
3. INSTALL ORNECO CF3 CARBON FILTER ON TOP OF BLACK STEEL PIPE CONNECTED TO THE MAN HOLE. THE VENT PIPE SHALL EXTEND 4' ABOVE GROUND AND WILL BE FITTED WITH THE CARBON FILTER ON TOP. PAINT THE VENT PIPE SAFETY YELLOW.

See TM Emergency Storage Section

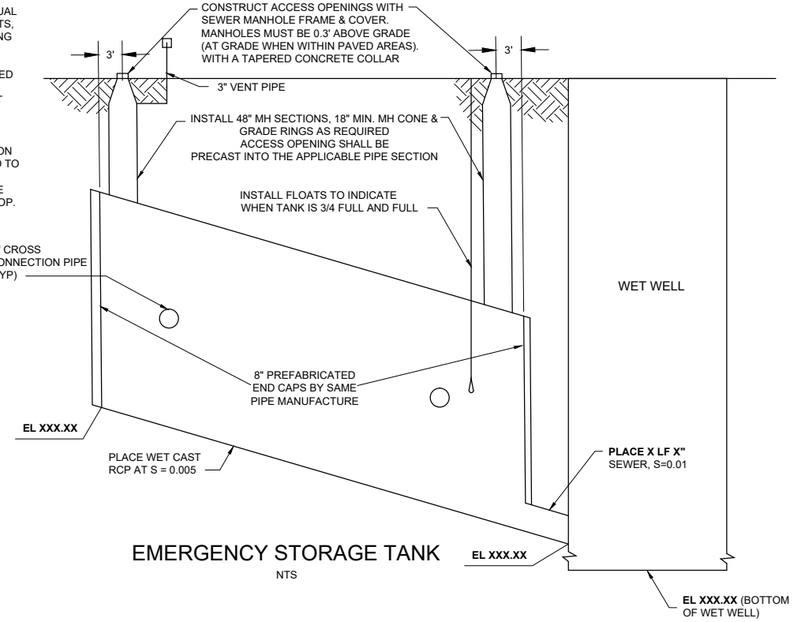

EMERGENCY STORAGE TANK

NTS

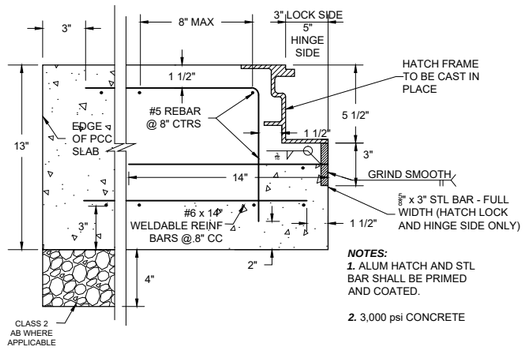

NOTES:
1. ALUM HATCH AND STL BAR SHALL BE PRIMED AND COATED.
2. 3,000 psi CONCRETE

REBAR PROFILE (TYP)
AND
BEARING PLATE DESIGN
(FOR WETWELL / VALVE BOX)

See TM Table 1 for system flow summary

DESIGN FLOW FOR LIFTSTATION

SUB AREA see note 1	# OF EDU's see note 2	UNIT FLOW gpd	AVERAGE FLOW gpd	PEAKING FACTOR	PEAK DESIGN FLOW gpd	PEAK DESIGN FLOW gpm
X	X	X	X	X	X	X
				TOTAL DESIGN FLOW gpm		

TOTAL DYNAMIC HEAD TDH

ELEV OF BOTTOM OF WET WELL ft (1)	ELEV OF FM AT HIGH POINT ft (2)	ELEV OF FM AT DISCHARGE ft (2)			STATIC HEAD ft (2) - (1)
X	X				X
PIPE SIZE in	**PIPE LENGTH** ft	**EQUIV PIPE LENGTH** see note 3 ft	**TOTAL PIPE LENGTH** ft	**C-VALUE**	**FRICTION LOSS** ft HW eq^n
X	X	X	X	X	X
			TOTAL FRICTION LOSS ft		
		TDH = STATIC HEAD + FRICTION HEAD ft			

See TM TDH Calculations and Friction Loss Calculations Tables 3 & 4

NOTES:
1. MAP OF SUB AREAS IS PROVIDED IN THE LIFT STATION DESIGN REPORT PREPARED BY: _____ AND DATED: _____.

2. DETAILED CALCULATIONS FOR THE EQUIVALENT DWELLING UNIT SUBTOTALS ARE PROVIDED IN THE DESIGN REPORT.

3. EQUIVALENT PIPE LENGTH FOR ALL FITTINGS ARE PROVIDED IN THE DESIGN REPORT.

AS-BUILT PUMP SPECIFICATIONS

TYPE:	BRAND	-INCH	MODEL
MOTOR:	HP / RPM / 3-PHASE / 60 CYCLE	VOLTS	
IMPELLER:			
POWER CONSUMPTION:	KW	FLA	LRA

See TM Pump Design Specifications Table 5

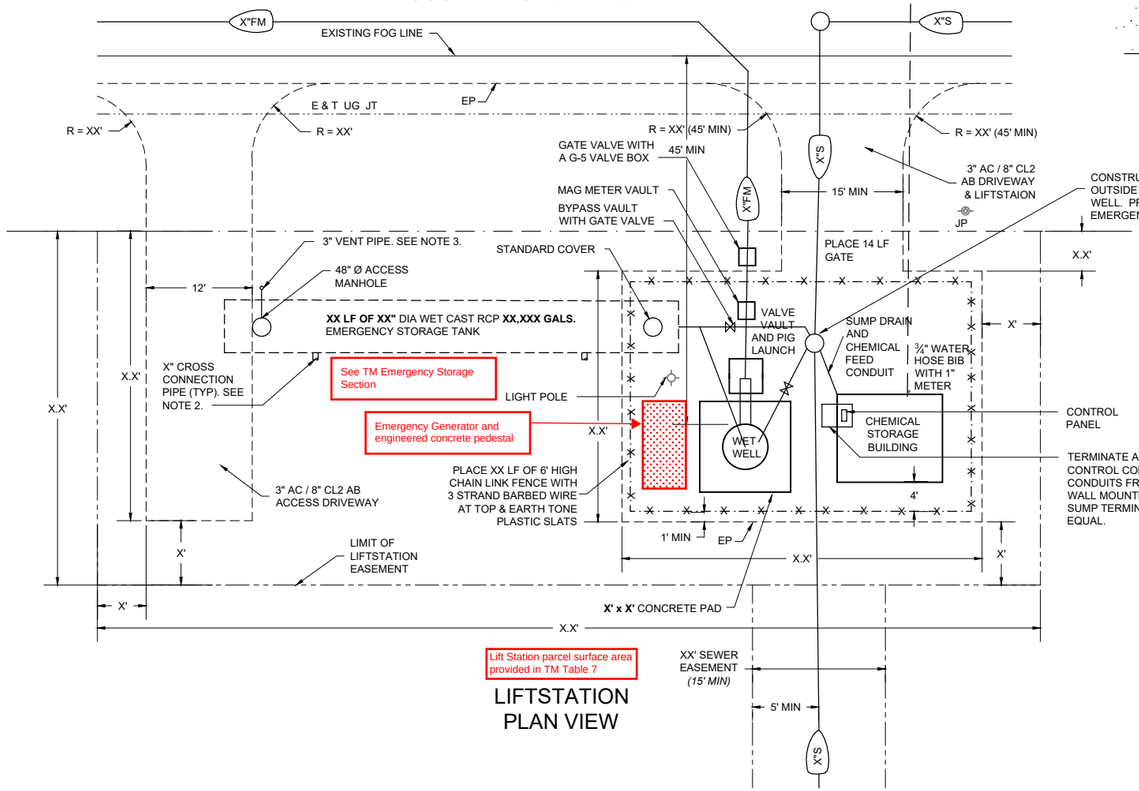

Lift Station parcel surface area provided in TM Table 7

LIFTSTATION PLAN VIEW

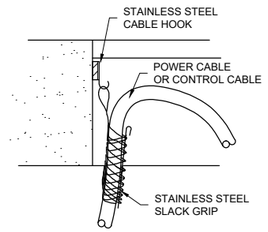

CABLE GRIP DETAIL

NTS

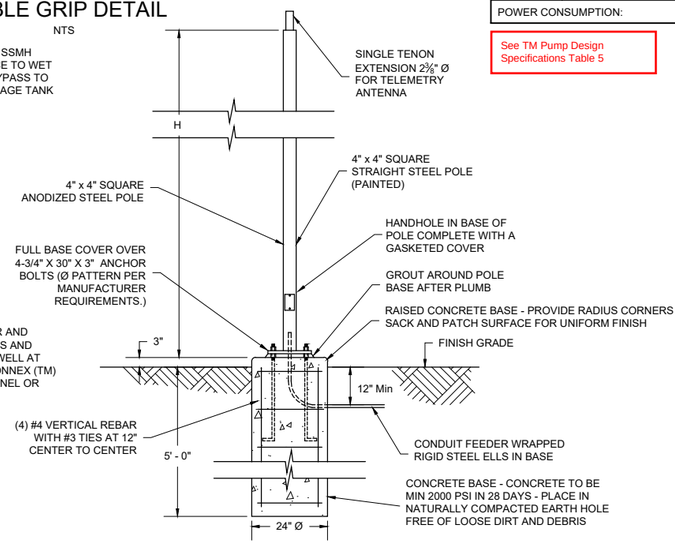

ANTENNA / LIGHT POLE & FOUNDATION DETAIL

NTS

H = 16' - 0" TELEMETRY ANTENNA ONLY

H = 20' - 0" LIGHT ONLY OR LIGHT/TELEMETRY ANTENNA

CONCEPTUAL DESIGN - NOT FOR CONSTRUCTION

REGISTERED CIVIL ENGINEER

DATE

REGISTERED PROFESSIONAL ENGINEER — No. ----- Exp. mm-dd-yy — CIVIL — STATE OF CALIFORNIA

DESIGNED:
DRAWN:
CHECKED:
REC DWG:
DATE:

PROJECT NO.

COUNTY OF PLACER
DEPARTMENT OF FACILITY SERVICES

PROJECT NAME
LIFT STATION DETAILS 2

SHEET NO. 2/3

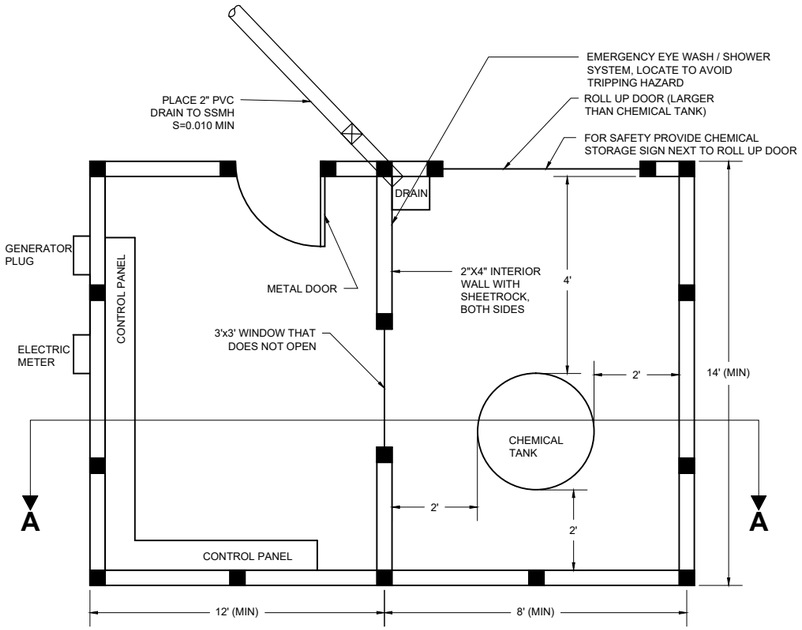

PLAN ELEVATION

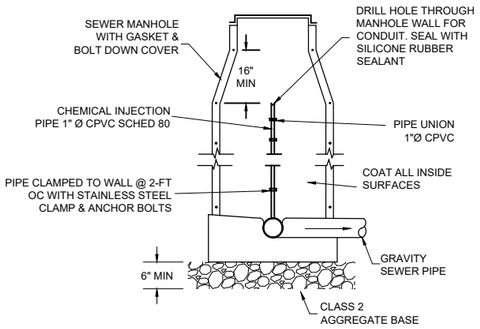

CHEMICAL FEED SYSTEM MANHOLE CONNECTION

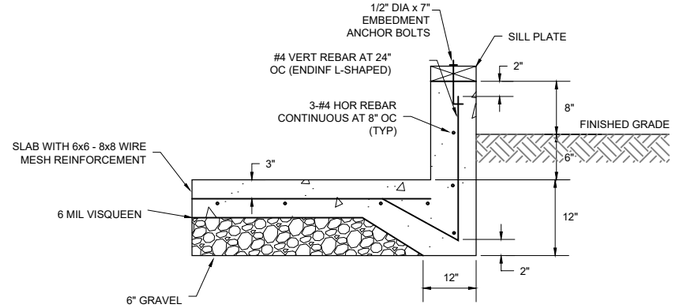

FOUNDATION SECTION

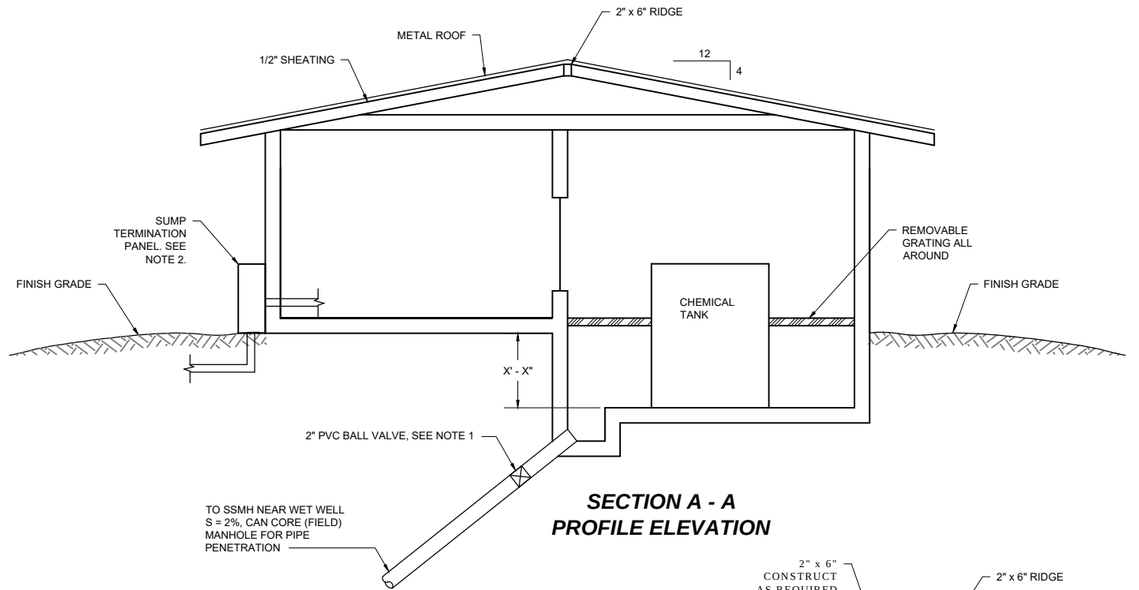

SECTION A - A
PROFILE ELEVATION

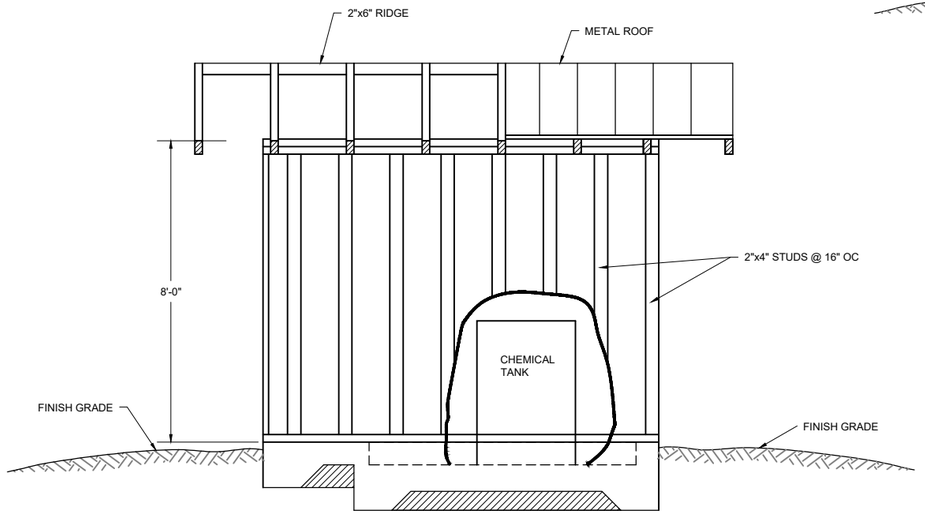

OUTSIDE ELEVATION

NOTES

1. FOR THE CHEMICAL FEED BUILDING'S 2" SUMP DRAIN, DO NOT USE A P-TRAP. PROVIDE A 2" PVC BALL VALVE WITH VALVE RISER AND G5 ACCESS BOX. VALVE TO BE NORMALLY CLOSED.
2. TESCONNEX (TN) SUMP TERMINATION PANEL OR EQUAL.

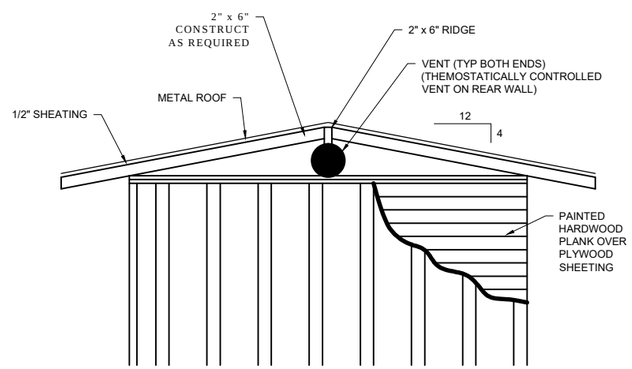

REAR ELEVATION

CONCEPTUAL DESIGN - NOT FOR CONSTRUCTION

REGISTERED CIVIL ENGINEER

DATE

REGISTERED PROFESSIONAL ENGINEER
REGISTERED ENGINEER
No. -----
Exp. mm-dd-yy
CIVIL
STATE OF CALIFORNIA

DATE:
DESIGNED:
DRAWN:
CHECKED:
REC DWG:

PROJECT NO.

COUNTY OF PLACER
DEPARTMENT OF FACILITY SERVICES

PROJECT NAME
LIFT STATION DETAILS 3

SHEET NO.
3
3

ATTACHMENT 3

Appendix D TM 2b – Dry Weather Flow Projections for Ultimate Service Area (w/ UGAs)

Technical Memorandum

South Placer Regional Wastewater and Recycled Water Systems Evaluation

Subject:	**Average Dry Weather Flow Projection for the Ultimate SPWA Service Area (Including Urban Growth Areas) -- (TM No. 2b)**
Prepared For:	Art O'Brien – City of Roseville
Prepared by:	Pete Bellows/Chris Peters – Brown and Caldwell Andy Smith – RMC
Reviewed by:	Dave Richardson/Gisa Ju – RMC
Date:	November 4, 2005; updated October 31, 2006, January 24, 2008 & September 3, 2009
Reference:	0091-004 Task 2

0 Previous TM Publication and Updates

Since the initial publication of technical memorandum (TM) 2b on November 4, 2005, changes in information available for the South Placer Wastewater and Recycled Water Systems Evaluation (Systems Evaluation), as well as changes in the data, have resulted in the need to identify and update out-of-date information. As part of the June 2007 publication of the Systems Evaluation, an Update Sheet was prepared for this TM, and is included in **Attachment B**. Subsequent changes have resulted in the need for further updates of the TM. The newest version of the TM is consistent with the updates summarized in the 2009 Update Sheet which is included in **Attachment C**.

1 Introduction

This TM summarizes the average dry weather wastewater flow (ADWF) projections for buildout conditions within the Ultimate SPWA service area. This includes flows generated within the 2005 Regional Service Area boundary and flows generated within the Urban Growth Areas (UGAs) located outside the 2005 Regional Service Area boundary. ADWF projections are used to project flows for the analysis of the SPWA wastewater treatment plants.

This TM is a supplement to the *Dry Weather Flow Projection for the 2005 Regional Service Area TM* (TM No. 2a) which summarized flow projections within the 2005 Regional Service Area. Further discussion of wastewater flow components, flow monitoring, development of the base sanitary flow (BSF) unit factors, and groundwater infiltration (GWI) is presented in TM No. 2a.

2 Buildout Land Use

Development of the buildout land use map (including UGAs), land use code designations, and connected land use is documented in the *June 2004 and Buildout Land Use TM* (TM No. 1b). Buildout land use is based on buildout within the Ultimate Service Area as shown in **Figure 1**. For the buildout condition, all parcels are considered to be connected to the wastewater collection system even though some land uses in the "Open Space" category do not generate wastewater. Buildout land use acreages for connected parcels within the Ultimate Service Area are summarized in **Table 1** and **Table 2**. Detailed land use summaries for each UGA are provided in **Attachment A** and TM No. 1b.

The total buildout acreage within the SPWA Ultimate Service Area is 74,522 acres. This includes 30,637 acres in the Pleasant Grove watershed and 43,253 acres in the Dry Creek watershed.

Table 1: Buildout Land Use Summary within the 2005 Regional Service Area

Land Use Designation	Buildout Connected Area (Acres)		Total Buildout Connected Area (Acres[1,2])
	Pleasant Grove Watershed[1]	Dry Creek Watershed[2]	
Commercial	2,151	2,915	5,066
Heavy Industrial	1,715	263	1,979
Light Industrial	1,599	637	2,236
Mixed Use	13	12	25
Open Space	7,318	3,502	10,820
Parks > 10 Acres	303	361	664
Public/Quasi-Public	327	878	1,206
Residential 1 DU	7,629	18,859	26,488
Residential 2 DU	0	839	839
Residential 3 DU	9	366	375
Residential Multiple DU	789	635	1,424
Schools	377	540	917
Total Acreage	**22,231**	**29,808**	**52,039**

[1] Includes portion of Placer Ranch UGA within the 2005 Regional Service Area.
[2] Includes portion of Placer Vineyards UGA within the 2005 Regional Service Area.

Table 2: Buildout Land Use Summary within Urban Growth Areas

Urban Growth Area (UGA)	Buildout Connected Area (Acres)		Total Buildout Connected Area (Acres)
	Pleasant Grove Watershed	Dry Creek Watershed	
Curry Creek UGA	3,212	--	3,212
Regional University UGA	1,140	--	1,140
Inviro Tech UGA	5	--	5
Placer UGA	--	630	630
Orchard Creek	25	--	25
Placer Ranch [1]	807	--	807
Placer Vineyards [1]	--	4,806	4,806
SMD-3	--	2,231	2,231
SPMUD UGA	--	6,410	6,410
Creekview UGA [2]	749		749
Sierra Vista UGA	1,785		1,785
Brookfield UGA	683		683
Total Acreage	**8,406**	**14,077**	**22,483**

[1] Does not include portions of Placer Ranch or Placer Vineyards UGAs within the 2005 Regional Service Area.
[2] "Panhandle" refers to a 238-acre portion of the Reason Farms planning area that is adjacent to the western boundary of the 511-acre Creekview UGA. Though not considered a UGA, the panhandle area is assumed to contribute wastewater flow to the Creekview UGA.

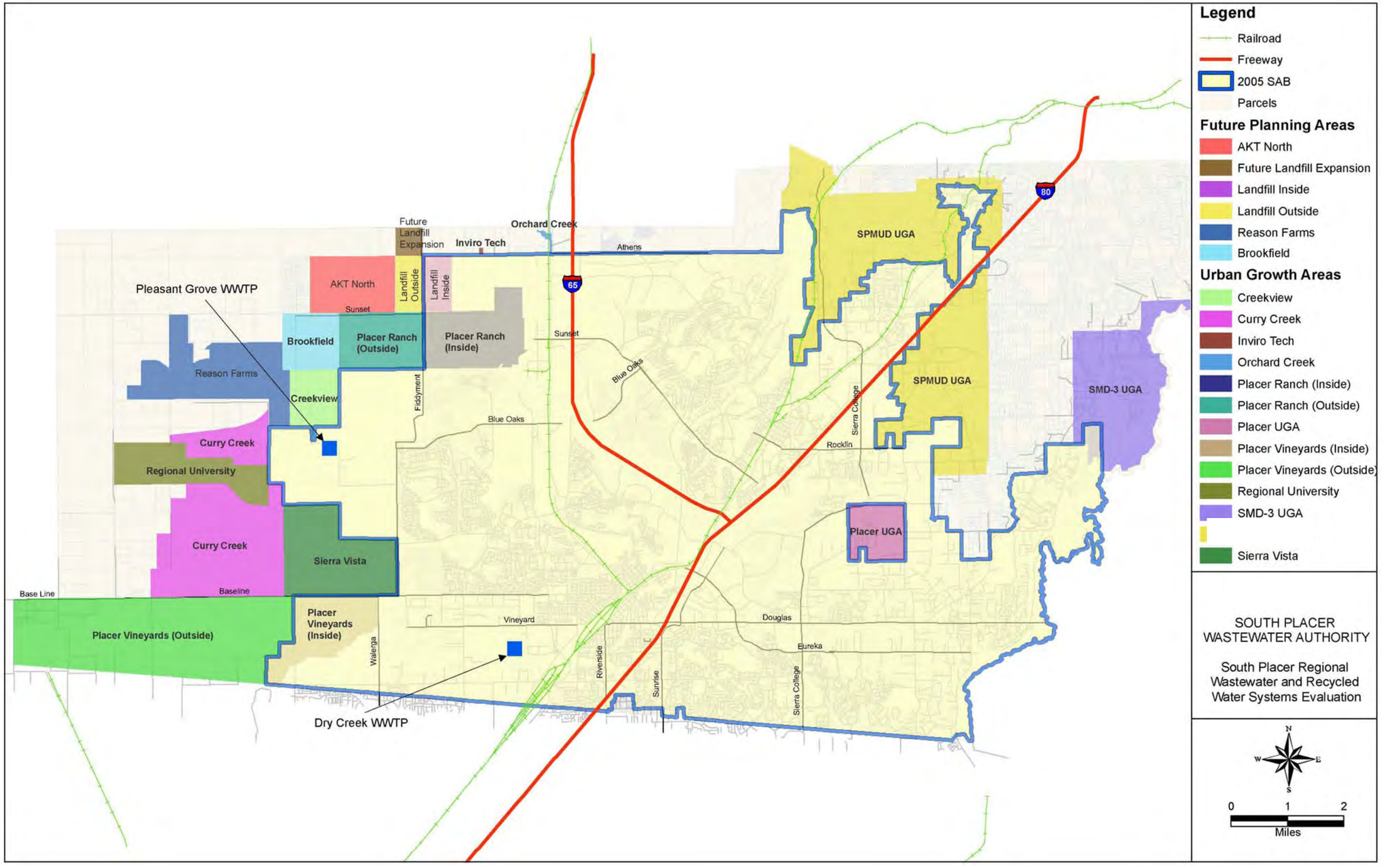

Figure 1 – Buildout Land Use Map Including UGAs

3 Point Sources

Seven existing point sources were identified within the 2005 Regional Service Area based on discussions with SPWA member agencies. Information about point sources is summarized in **Table 3**. There are also three point sources located within UGAs. These point source flows are included with the UGA flow projections presented later in this TM and the UGA flow projection worksheets provided in **Attachment A**. Existing point sources in the 2005 Regional Service Area were identified from flow monitoring and water billing information. The Placer County Landfill was also identified as a point source because it generates very little wastewater flow in comparison to its land area. Buildout flow projections from NEC and HP were provided by the City of Roseville and are based on buildout conditions for each development.

Table 3: June 2004 and Buildout ADWF from Point Sources in the June 2004 Service Area

Point Source	Location	Current Flow Data Source	Current ADWF (gpd)	Projected Buildout ADWF (gpd)
Union Pacific Railroad	Roseville	City of Roseville	85,000	85,000
Landfill	Placer County	City of Roseville	5,000	5,000
NEC	Roseville	Flow Monitor Data	700,000	2,000,000
HP	Roseville	City of Roseville	150,000	484,000
Kaiser Hospital	Roseville	Water Use Data	50,000	50,000
Formica	Placer County	Placer County	60,000	60,000
Rio Bravo Power Plant	Placer County	Placer County	15,000	15,000

Notes: Flow projections are based upon existing land use and existing land use designations current as of June 2004, and will provide the estimated flows for baseline modeling scenario for SPWA. Rezoning of HP and Kaiser Hospital properties are now better known than in June 2004, and are documented in TM No. 9b, and are included in a "Land Use intensification Scenario".

4 Unit Flow Factors

Information about the development of unit flow factors used for the WWTP expansion analysis is discussed in the Dry Weather Flow Projection for the 2005 Regional Service Area TM (TM No. 2a). The 2005 unit flow factors for the buildout scenario are presented in **Table 4**. Unit flow factors for single family residential are applied on a per dwelling unit (du) basis while unit flow factors for other land uses are applied on an acreage basis.

Table 4: 2005 Average Dry Weather Flow (ADWF) Factors

Land Use Designation	Units	2005 Unit Flow Factors WWTP Analysis[1]	1996 Master Plan Unit Flow Factor
Commercial	gpd per acre	850	1,040
Heavy Industrial	gpd per acre	850	1,560
Light Industrial	gpd per acre	850	1,040
Mixed Use	gpd per acre	2,300	N/A
Public/Quasi-Public	gpd per acre	660	1,040
Schools	gpd per acre	170	N/A
Residential 1 DU	gpd per du	190	260
Residential 2 DU	gpd per du	190	260
Residential 3 DU	gpd per du	190	260
Residential Mult. DU	gpd per acre	2,040[2]	4,160
Open Space	gpd per acre	0	0
Parks > 10 Acres	gpd per acre	10	N/A
Vacant	gpd per acre	0	0

[1] Includes allowance for dry season GWI.
[2] The 2005 Residential Multiple DU unit flow factor can also be represented as 130 gpd per du

5 Buildout Flow Projections

Buildout ADWF projections within the Ultimate SPWA Service Area are based on the unit ADWF factors developed for the WWTP analysis above (includes dry season GWI). These flow projections include the results of proposed redevelopment/intensification within Roseville and Rocklin, which were analyzed as a separate scenario and are presented in detail in the *Intensification Land Use TM* (TM No. 9c). Buildout ADWF projections within the 2005 Regional Service Area are presented in **Table 5**. Buildout average dry weather flow projections within the Ultimate SPWA Service Area (including UGAs) are presented in **Table 6**. Detailed flow projections for each UGA are presented in **Attachment A** at the end of this TM.

Table 5: Buildout ADWF Projections within 2005 Regional Service Area

Land Use	Unit Flow Factor	PG WWTP[3]		DC WWTP[4]		2005 Regional Service Area	
		Buildout Units (ac or du)	Buildout ADWF (mgd)	Buildout Units (ac or du)	Buildout ADWF (mgd)	Buildout Units (ac or du)	Buildout ADWF (mgd)
Commercial	850 gpd/ac	1,728	1.47	2,890	2.46	4,618	3.92
Heavy Industrial[1]	850 gpd/ac	1,680	1.43	263	0.22	1,943	1.65
Light Industrial[1]	850 gpd/ac	1,221	1.04	637	0.54	1,858	1.58
Mixed Use	2,300 gpd/ac	-	-	7	0.02	7	0.02
Public/Quasi-Public[1]	660 gpd/ac	282	0.19	851	0.56	1,133	0.75
Schools	170 gpd/ac	258	0.04	540	0.09	798	0.14
Residential 1 DU	190 gpd/du	26,893	5.11	42,866	8.14	69,759	13.25
Residential 2 DU	190 gpd/du	2	0.0004	2,122	0.40	2,124	0.40
Residential 3 DU	190 gpd/du	12	0.002	720	0.14	732	0.14
Residential Multiple DU	2,040 gpd/ac	594	1.21	606	1.24	1,200	2.45
Open Space	0 gpd/ac	6,034	-	3,171	-	9,205	-
Parks > 10 Acres	10 gpd/ac	270	0.003	361	0.004	631	0.01
Point Sources	Varies gpd/ac	1,043	2.56	91	0.14	1,134	2.70
Placer Ranch[2]	Varies gpd/ac	1,027	0.90	-	-	1,027	0.90
West Roseville[2]	Varies gpd/ac	3,162	2.07	-	-	3,162	1.70
Placer Vineyards[2]	Varies gpd/ac	-	-	1,062	0.58	1,062	0.58
Rezones	Varies gpd/ac	-	0.50	-	0.17	-	0.67
Intensification	Varies gpd/ac	-	-	-	1.64	-	1.64
	Total (mgd)		**16.52**		**16.34**		**32.86**

[1] Land use category does not include area of parcels associated with point sources identified in **Table 3**.
[2] Includes portion of development located within the 2005 Regional Service Area.
[3] Pleasant Grove WWTP Service Area
[4] Dry Creek WWTP Service Area
[5] Includes all of WRSP, located entirely inside of the 2005 Regional Service Area boundary

Table 6: Buildout ADWF Projections within Ultimate SPWA Service Area

Description of Area	Buildout ADWF (mgd)		Total Buildout ADWF (mgd)
	PGWWTP[3]	DCWWTP[4]	
2005 Regional Service Area	16.52	16.34	32.86
Curry Creek UGA	2.72	-	2.72
Regional University UGA	1.17	-	1.17
Inviro Tech UGA	0.08	-	0.08
Placer UGA	-	0.01	0.01
Orchard Creek UGA	0.02	-	0.02
Placer Ranch UGA	1.27	-	1.27
Placer Vineyards UGA	-	2.23	2.23
SMD-3 UGA	-	0.29	0.29
SPMUD UGA	-	1.11	1.11
Creekview UGA and Panhandle[5]	1.06	-	1.06
Sierra Vista UGA	2.10	-	2.10
Brookfield UGA	0.73	-	0.73
Total ADWF (mgd)	**25.67**	**19.99**	**45.64**

[1] Includes portion of Placer Ranch UGA within the 2005 Regional Service Area.
[2] Includes portion of Placer Vineyards UGA within the 2005 Regional Service Area.
[3] Pleasant Grove WWTP Service Area
[4] Dry Creek WWTP Service Area
[5] "Panhandle" refers to a 238-acre portion of the Reason Farms planning area that is adjacent to the western boundary of the 511-acre Creekview UGA. The panhandle area is assumed to contribute wastewater flow to the Creekview UGA.

Attachment A

Urban Growth Area Flow Projections

CURRY CREEK UGA

PLEASANT GROVE WATERSHED

Connected Land Use Description	Units	DU or Area (acres)	Unit Flow Factor (gpd)	(gpd)
OPEN SPACE	Acres	931	-	-
COMMERCIAL	Acres	161	850	136,850
HEAVY INDUSTRIAL	Acres	64	850	54,400
LIGHT INDUSTRIAL	Acres	161	850	136,850
MIXED USE	Acres	64	2,300	147,200
PUBLIC/QUASI-PUBLIC	Acres	161	660	106,260
SCHOOLS	Acres	96	170	16,320
RESIDENTIAL 1 DU	DU	8,988	190	1,707,720
RESIDENTIAL 2 DU	DU	-	190	-
RESIDENTIAL 3 DU	DU	-	190	-
RESIDENTIAL MULTIPLE DU	DU	3,210	130	417,300
Total				2,722,900
Total (mgd)				**2.72**

REGIONAL UNIVERSITY UGA

PLEASANT GROVE WATERSHED

Connected Land Use Description	Units	DU or Area (acres)	Unit Flow Factor (gpd)	(gpd)
OPEN SPACE	Acres	149	-	-
COMMERCIAL	Acres	22	850	18,870
HEAVY INDUSTRIAL	Acres	-	850	-
LIGHT INDUSTRIAL	Acres	-	850	-
MIXED USE	Acres	-	2,300	-
PUBLIC/QUASI-PUBLIC	Acres	10	660	6,864
SCHOOLS	Acres	31	170	5,270
RESIDENTIAL 1 DU	DU	2,226	190	422,940
RESIDENTIAL 2 DU	DU	-	190	-
RESIDENTIAL 3 DU	DU	-	190	-
RESIDENTIAL MULTIPLE DU	DU	1,006	130	130,780
Point Sources				
UNIVERSITY				582,600
Total				1,167,324
Total (mgd)				**1.17**

INVIRO TECH UGA

PLEASANT GROVE WATERSHED

Connected Land Use Description	Units	DU or Area (acres)	Unit Flow Factor (gpd)	(gpd)
OPEN SPACE	Acres	0	0	0
COMMERCIAL	Acres	0	850	0
HEAVY INDUSTRIAL	Acres	0	850	0
LIGHT INDUSTRIAL	Acres	0	850	0
MIXED USE	Acres	0	2,300	0
PUBLIC/QUASI-PUBLIC	Acres	0	660	0
SCHOOLS	Acres	0	170	0
RESIDENTIAL 1 DU	DU	0	190	0
RESIDENTIAL 2 DU	DU	0	190	0
RESIDENTIAL 3 DU	DU	0	190	0
RESIDENTIAL MULTIPLE DU	DU	0	130	0
Point Sources				
INVIRO TECH				80,000
Total				80,000
Total (mgd)				**0.08**

PLACER RANCH UGA (OUTSIDE 2005 REGIONAL SERVICE AREA)

PLEASANT GROVE WATERSHED

Connected Land Use Description	Units	DU or Area (acres)	Unit Flow Factor (gpd)	(gpd)
OPEN SPACE	Acres	74	-	-
COMMERCIAL	Acres	67	850	56,610
HEAVY INDUSTRIAL	Acres	-	850	-
LIGHT INDUSTRIAL	Acres	29	850	24,650
MIXED USE	Acres	20	2,300	46,460
PUBLIC/QUASI-PUBLIC	Acres	21	660	14,058
SCHOOLS	Acres	30	170	5,100
RESIDENTIAL 1 DU	DU	2,046	190	388,683
RESIDENTIAL 2 DU	DU	-	190	-
RESIDENTIAL 3 DU	DU	-	190	-
RESIDENTIAL MULTIPLE DU	DU	2,281	130	296,582
Point Sources				
UNIVERSITY [a]				440,000
Total				1,272,143
Total [b] (mgd)				**1.27**

Footnotes:
(a) Does not include faculty housing, which is included in the Residential categories above.
(b) 1.27 mgd does not include flows from "offsite" areas.

CREEKVIEW UGA & PANHANDLE [a]

PLEASANT GROVE WATERSHED

Connected Land Use Description	Units	DU or Area (acres)	Unit Flow Factor (gpd)	(gpd)
OPEN SPACE	Acres	248	-	-
COMMERCIAL	Acres	11	850	9,435
HEAVY INDUSTRIAL	Acres	-	850	-
LIGHT INDUSTRIAL	Acres	9	850	7,225
MIXED USE	Acres	12	2,300	27,600
PUBLIC/QUASI-PUBLIC	Acres	3	660	2,046
SCHOOLS	Acres	11	170	1,785
RESIDENTIAL 1 DU	DU	1,593	190	302,670
RESIDENTIAL 2 DU	DU		190	-
RESIDENTIAL 3 DU	DU		190	-
RESIDENTIAL MULTIPLE DU	DU	1,170	130	152,100
Total				502,861
Point Sources *(From Panhandle Area)*				
From North Panhandle Area [a,b]				
MDH (Faculty Housing)	DU	96	190	18,240
Commercial (Hotel)	DU	150	190	28,500
Commercial (Athletic Club)	acres	1	850	850
From South Panhandle Area [c]				
University [d]	acres	221	2,304	509,184
Total (mgd)				**1.06**

Footnotes:

(a) "North Panhandle" refers to the portion of the Reason Farms panhandle that is north of Pleasant Grove Creek; this area is adjacent to the western boundary of the Creekview UGA. This area is assumed to contribute wastewater flow to the Creekview UGA.

(b) As of July 2007, several development scenarios were under consideration for the North Panhandle area. The scenarios associated with the highest flow estimates are included here.

(c) The entire "Panhandle" area comprises approximately 238 acres. Subtracting 17 acres (Wood Rodgers) for the North Panhandle area yields 221 acres remaining for a proposed private university in the "South Panhandle" area.

(d) The unit flow factor for the university was derived by dividing the total flow projection for the university in the Placer Ranch UGA (0.68 mgd) by its corresponding acreage (295 acres), yielding 2,304 gpad.

SIERRA VISTA UGA

PLEASANT GROVE WATERSHED

Connected Land Use Description	Units	DU or Area (acres)	Unit Flow Factor (gpd)	(gpd)
OPEN SPACE [a]	Acres	412	-	-
COMMERCIAL	Acres	220	850	187,000
HEAVY INDUSTRIAL	Acres	-	850	-
LIGHT INDUSTRIAL	Acres	-	850	-
MIXED USE [b]	Acres	43	2,300	98,900
PUBLIC/QUASI-PUBLIC	Acres	10	660	6,600
SCHOOLS	Acres	68	170	11,492
RESIDENTIAL 1 DU	DU	7,799	190	1,481,810
RESIDENTIAL 2 DU	DU	-	190	-
RESIDENTIAL 3 DU	DU	-	190	-
RESIDENTIAL MULTIPLE DU	DU	2,399	130	311,870
Total				2,097,672
Total (mgd)				**2.10**

Footnotes:
(a) Estimated area. At zero gpd/acre, however, this estimate does not impact flow projections

(b) Differs from 78,900 gpd calculated in the Sierra Vista Sanitary Sewer Master Plan (MSCE, July 2007).

BROOKFIELD UGA

PLEASANT GROVE WATERSHED

Connected Land Use Description	Units	DU or Area (acres)	Unit Flow Factor (gpd)	(gpd)
OPEN SPACE	Acres	208	-	-
COMMERCIAL	Acres	14	850	11,560
HEAVY INDUSTRIAL	Acres	-	850	-
LIGHT INDUSTRIAL	Acres	-	850	-
MIXED USE	Acres	-	2,300	-
PUBLIC/QUASI-PUBLIC	Acres	2	660	1,320
SCHOOLS	Acres	22	170	3,740
RESIDENTIAL 1 DU	DU	835	190	158,650
RESIDENTIAL 2 DU	DU	2,087	190	396,530
RESIDENTIAL 3 DU	DU	-	190	-
RESIDENTIAL MULTIPLE DU	DU	1,252	130	162,760
Total				734,560
Total[1] (mgd)				**0.73**

Footnotes:
[1]Brookfield developers supplied several sets of preliminary land use data during this project, resulting in a range of projected ADWF from 0.69 (the most recent) to 0.73 mgd. The largest of these projections, 0.73 mgd, was used for this analysis.

PLACER UGA

DRY CREEK WATERSHED

Connected Land Use Description	Units	DU or Area (acres)	Unit Flow Factor (gpd)	(gpd)
OPEN SPACE	Acres	-	-	-
COMMERCIAL	Acres	-	850	-
HEAVY INDUSTRIAL	Acres	-	850	-
LIGHT INDUSTRIAL	Acres	-	850	-
MIXED USE	Acres	-	2,300	-
PUBLIC/QUASI-PUBLIC	Acres	-	660	-
SCHOOLS	Acres	-	170	-
RESIDENTIAL 1 DU	DU	27	190	5,130
RESIDENTIAL 2 DU	DU	-	190	-
RESIDENTIAL 3 DU	DU	-	190	-
RESIDENTIAL MULTIPLE DU	DU	-	130	-
Total				5,130
Total (mgd)				**0.01**

PLACER VINEYARDS UGA (OUTSIDE 2005 REGIONAL SERVICE AREA [a,b])

DRY CREEK WATERSHED

Connected Land Use Description	Units	DU or Area (acres)	Unit Flow Factor (gpd)	(gpd)
OPEN SPACE [c]	Acres	729	-	-
COMMERCIAL	Acres	236	850	200,600
HEAVY INDUSTRIAL	Acres	-	850	-
LIGHT INDUSTRIAL	Acres	-	850	-
MIXED USE	Acres	63	2,300	143,750
PUBLIC/QUASI-PUBLIC	Acres	119	660	78,540
SCHOOLS	Acres	140	170	23,800
RESIDENTIAL 1 DU	DU	7,649	190	1,453,310
RESIDENTIAL 2 DU	DU	-	190	-
RESIDENTIAL 3 DU	DU	-	190	-
RESIDENTIAL MULTIPLE DU	DU	2,542	130	330,460
Total				2,230,460
Total (mgd)				**2.23**

Footnotes:
(a) There is an area of approximately 150 acres inside Placer Vineyards Shed A, but within the 2005 Regional Service Area Boundary. Mike Smith of MSCE provided land use information for this area in September 2007. Flow projections for this area were therefore subtracted from Shed A and added to the Shed B flows to represent the total flow from within the 2005 Regional Service Area Boundary.

(b) For convenience, the boundary for Shed A is henceforth assumed to be contiguous with the 2005 SAB and the area represented by the ADWF presented above.
(c) Estimated area. At zero gpd/acre, however, this estimate does not impact flow projections

SMD-3 UGA

DRY CREEK WATERSHED

Connected Land Use Description	Units	DU or Area (acres)	Unit Flow Factor (gpd)	(gpd)
OPEN SPACE	Acres	-	-	-
COMMERCIAL	Acres	3	850	2,550
HEAVY INDUSTRIAL	Acres	-	850	-
LIGHT INDUSTRIAL	Acres	-	850	-
MIXED USE	Acres	-	2,300	-
PUBLIC/QUASI-PUBLIC	Acres	11	660	7,260
SCHOOLS	Acres	-	170	-
RESIDENTIAL 1 DU	DU	1,268	190	240,920
RESIDENTIAL 2 DU	DU	14	190	2,660
RESIDENTIAL 3 DU	DU	-	190	-
RESIDENTIAL MULTIPLE DU	DU	250	130	32,500
Total				285,890
Total (mgd)				**0.29**

SPMUD UGA

DRY CREEK WATERSHED

Connected Land Use Description	Units	DU or Area (acres)	Unit Flow Factor (gpd)	(gpd)
OPEN SPACE	Acres	97	-	-
COMMERCIAL	Acres	99	850	84,150
HEAVY INDUSTRIAL	Acres	-	850	-
LIGHT INDUSTRIAL	Acres	-	850	-
MIXED USE	Acres	-	2,300	-
PUBLIC/QUASI-PUBLIC	Acres	-	660	-
SCHOOLS	Acres	-	170	-
RESIDENTIAL 1 DU - by 2050 [a]	DU	1,200	190	228,000
RESIDENTIAL 1 DU - after 2050 [a]	DU	4,180	190	794,200
RESIDENTIAL 2 DU	DU	-	190	-
RESIDENTIAL 3 DU	DU	-	190	-
RESIDENTIAL MULTIPLE DU	DU	-	130	-
Total				1,106,350
Total - by 2050 [a] (mgd)				**0.23**
Total - after 2050 [a] (mgd)				**1.11**

Footnotes:
a) Based on information provided by SPMUD, a total of 5,380 DUs are expected in the SPMUD UGA at ultimate buildout. However, SPMUD projects that only 1,200 of these DUs will be built within the planning horizon (2050) of this study, leaving 4,180 DUs for later buildout.

ATTACHMENT 4

Memo
March 3, 2015

To: Dale Olson, City of Roseville
From: Brian Durham, MacKay & Somps, Inc.
CC: Ryan O'Keefe, Westpark Communities

Topic: Placer Ranch Specific Plan - Preliminary University Sewer Demands Estimate

This memo's purpose is to review and analyze the sewer demands for the University site located within the Placer Ranch Specific Plan Area. This memo will review and analyze three different methods of determining an appropriate sewer demand for the University site, and are based on discussions held with the client Westpark Communities (Ryan O'keefe), City of Roseville staff (Dale Olson), sub-consultant Hydroscience Engineers (Curtis Lam) and with MacKay & Somps Civil Engineers.

In order to quantify the flow characteristics of sewer flow from the University site a preliminary Campus Plan map, tables, and populations were provided to MacKay & Somps from Westpark Communities on January 26, 2015.

Since the City of Roseville design criteria does not provide information regarding sewer sizing and demand factors for a University type of land use designation, MacKay & Somps has been instructed by the client to calculate an estimate of the sewer demands from the University site. Instructions were given to use criteria found from recent University projects in California (UC Merced), existing data from established Universities (Sacramento State University), and using the existing City of Roseville demand factors for comparable data. The three methods of analysis are described below:

1. **CSUS Method:** Flows were estimated using data from a *Utility Infrastructure Failure Analysis & Impact Assessment* dated August 15, 2014 by P2S Engineering, Inc. for Sacramento State provided to MacKay & Somps from the client. This assessment report identified average wastewater flows from the university, and daily wastewater flows from staff, visitors, non-resident students and resident students, see **Table 1**.

Table 1 - CSUS Flow Factors

Category	Flow Factor	Flow Unit
Staff, Visitors, Non-Residents	4	gpcd
Resident Students	98	gpcd

2. **UC Merced Method:** Flows were estimated using data from the *UC Merced and University Community Project Draft EIR/EIS* dated November 2008 by Impact Sciences, Inc. and the *Long Range Development Plan Draft Environmental Impact Report* dated August 2001. This document identifies that the water use and wastewater flows are related and that wastewater flows are generated from the indoor water uses and are affected by water conservation efforts. These reports estimate that the wastewater generation will be 90% of the indoor water demand and 30% of the cooling water demand.

   For the Placer Ranch University site this method will utilize the water demands estimated in a Technical Memo by Hydroscience Engineers "*Placer Ranch Specific Plan - University Water Demand Estimate*", dated February 11, 2015. Within this technical memo the overall water use

for the Placer Ranch University site, domestic indoor water demand plus irrigation demand, was estimated at 1.63-MGD (1,821-AFY). For the Placer Ranch University site the indoor water demand is estimated at 1.14-MGD (1,280-AFY) and the cooling water demand is estimated at 0.18-MGD (200-AFY). The remaining 0.30-MGD (341-AFY) is the estimated water demand for irrigation purposes throughout the Placer Ranch University site.

3. **City Method (SPWA Tech Memo-TM2b):** Flows were estimated using data from tech memo *TM2b-Dry Weather Flow Projections for Ultimate Service Area (w/ UGAs)* out of the *South Placer Regional Wastewater and Recycled Water Systems Evaluation* report by RMC dated September 2009. A unit flow factor for the University was derived by dividing the total flow projection for the University in the Placer Ranch UGA (0.68-MGD per the GCW Placer Ranch Preliminary Master Sewer Plan dated July 2007) by its corresponding acreage (295-AC), yielding 2,304 gpad.

Using the three methods described above and the Land Use plan provided, an estimated sewer demand for the Placer Ranch University site was calculated three different ways and can be see in the below table's for comparison.

Table 2 - CSUS Method

Category	Population	Flow Factor	Flow Unit	ADWF (MGD)
Non-Resident Students	25,000	4	gpcd	0.10
Staff	2,000	4	gpcd	0.01
Resident Students	5,000	98	gpcd	0.49
Total	**32,000**			**0.60**

Table 3 - UC Merced Method

	Potable Water	**Cooling Water**
Water Demand (AFY)	1,283	200
Wastewater Generated	90%	30%
Wastewater Generation (AFY)	1,155	60
Total Wastewater (AFY)	1,155 + 60 = 1,215	
Total Wastewater (gpd)[1]	1,081,350	
Total Wastewater (MGD)	**1.08**	

[1]1 Ac-ft/year (AFY) = approximately 890 gallons per day (gpd)

Table 4 - City of Roseville TM-2b

Category	Area (Acres)	Flow Factor	Flow Unit	ADWF (MGD)
University [1]	300.4	2,304	gpd/ac	0.69
Total	**300.4**			**0.69**

[1]The University flow factor was determined from the Sept. 2009 SPWA systems evaluation report TM2b

Each of the above three methods used to analyze the flow from the University use different assumptions and criteria. The CSUS method was based solely on empirical data from a University wide assessment. The UC Merced method was based on a percentage of indoor and cooling water demands. And the City of Roseville method is a logical comparison based on past studies and projects. Below is a summary table (**Table 5**) of the results from each of the three methods

Table 5 - Summary

Method	Estimated ADWF (MGD)
Method 1 - CSUS method	0.60
Method 2 - UC Merced Method	1.08
Method 3 - City of Roseville SPWA Method	0.69

From the Hydroscience Technical Memo, it was noted that the water usage for the UC Merced campus has been significantly reduced due to water conservation measures put into place to reduce the UC Merced's campus water use. A reduction of water flows would then result in a relative reduction in sewer flows. This may be of concern for providing minimum flows through the transmission pipes of at least 2.0 fps. Through a phone discussion with the City of Merced staff it was understood that the current UC Merced campus is currently under going a revision or an update to their sewer master plan and we were unable to obtain a copy of the sewer master plan at this time. Also, based on statements from the Hydroscience Tech Memo regarding the UC Merced method being an over estimate, it is easily assumed that the sewer flows using the UC Merced method would be an over estimate as well.

Upon further review of the data from the SPWA TM2b report and the previous Placer Ranch Preliminary Master Sewer Plan, it is unclear how GC Wallace derived flows for the University specifically. A flow factor was assigned for University faculty housing, and University student housing, but not for the university facilities, ie. stadiums, university unions, gyms, etc. It is logical to assume that a University could be similar to a Mixed Use land use category which yields a sewer flow factor of 2,300 gpd per ac.

The CSUS method and City of Roseville Method are significantly different from the UC Merced method and this is likely because of the possible over estimate of water flows as noted with the Hydroscience Tech Memo for the UC Merced method. The CSUS and Roseville methods seem to be in the same range and one is an empirical based assumption and one is a logical assumption based on previous studies and projects.

Based on the information reviewed and included within this memo, it is our opinion that Method 3 should be used as the basis for sanitary sewer demands for the University site. This method was used within the Urban Growth Management plan for the SPWA Systems Evaluation Report for the City of Roseville which has been accepted by the City and would be consistent with the demands outlined in the Systems Evaluation Report.

Placer Ranch CSUS University Sewer Flow Data Research

UC Merced-planned 25,000 FTE students over 910 Acres (currently 6,300 students and 264 staff)

- **5 million gallons per month** (per recent sample test monitors completed by City of Merced) **Note-**5,000,000 gal per month/30 days/1 month = **166,666 gpd**
- **2004** ADWF = **79,500 gpd**; **2008** ADWF = **209,700**; **Full Development** = **1.59 mgd** (per August 2001 Draft EIR by URS)

Sac State-currently 29,349 Students over 300 acres (29,349 students and 2,749 staff)

- Average Wastewater Flows = **256,800 gpd** (per Sacramento States "Utility Infrastructure Failure Analysis & Impact Assessment" draft report dated 8/15/2014 by P2S Engineering, Inc.)

UC Davis-currently approximately 40,000 people over 5,200 acres (34,415 students and approximately 5,500 staff)

- Campus Wastewater to plant ADWF = **1.7 mgd** (per October 8, 2004 UC Davis Campus WWTP Expansion Draft EIR)
- Current Campus Wastewater to plant ADWF = **1.5 mgd** (per UC Davis Engineer, Michael Fan)

UC Santa Cruz-currently 17,750 people over 2,000 acres (approximately 17,200 students and 550 staff)

- **2003** ADWF = **301,370 gpd** (per 2005 LRDP Draft EIR)
- **2020** projected ADWF = **423,875 gpd** (per 2005 LRDP Draft EIR)

Cal Poly –currently approximately 20,000 over 155 acres (18,762 students and 1,244 staff)

- **471,000 gpd** (per March 2001 Cal Poly Master Plan and EIR)

Placer Ranch CSUS University-30,000 students and approximately 2,000 staff over 300 acres

- 300 Acres x 2,304 gpd/Acre = **691,200 gpd** (The unit flow factor of 2,304 gpd/Acre was established from the SPWA System Evalutaion report Technical Memo 2b-Attachement A "Urban Growth Area Flow Projections")

Summary Table

University	Population (students + staff)	ADWF (gpd)	gpd per person
UC Merced	6,600	166,666	25.3
Sacramento State	32,100	256,800	8.0
UC Davis	40,000	1,700,000	42.5
UC Santa Cruz	17,750	423,875	23.9
Cal Poly	20,000	471,000	23.6
Average	**23,290**	**603,668**	**24.7**
Proposed Placer Ranch University	32,000	691,200	21.6

ATTACHMENT 5

Sunset County Service Area - Zone 2A3

Sunset County Service Area - Zone 2A3

Map Page CA3

- Force Main
- Gravity Main
- Low Pressure
- Low Pressure Solids
- Siphon
- Vent
- Abandoned Sewer Main
- Private Sewer Main
- Air Relief Valve
- Air Vacuum Relief Valve
- Blow Off Valve
- Pressure Relief Valve
- Ball Valve
- Gate Valve
- Manhole
- Cleanout
- Cleanout In Manhole
- End Of Line
- Launch In Manhole
- Launch In Vault
- Receive/Launch In Manhole
- Receive/Launch In Vault
- Reducer
- Lift Station
- District Boundary
- County Step Tank
- Private Step Tank

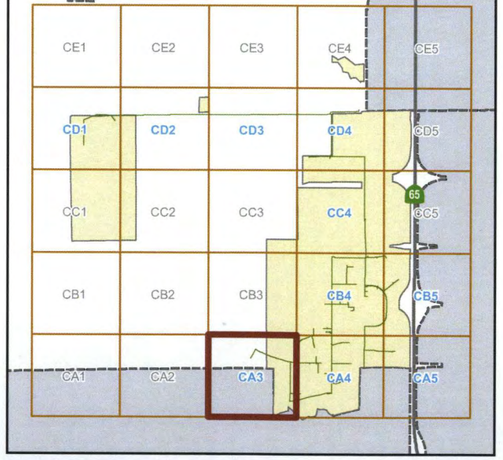

Created: 3/1/2011

N W E S

Feet
0 200 400 800

S:\FAC\GIS\Mapbook\MXD's\Sunset(Zone2A3)_MapBookPage.mxd

This information herein is a public resource and is not to be used for design purposes. The County of Placer makes no warranty, representation or guarantee as to the content, sequence, accuracy, timeliness or completeness of any of the cartographic or database information provided herein. The County of Placer explicitly disclaims any representations and warranties, including, without limitation, the implied warranties of merchantability and fitness for a particular purpose.
The County of Placer shall assume no liability for:
1. Any errors, omissions, or inaccuracies in the information provided, regardless of how caused; or
2. Any decision made for action taken or not taken by reader in reliance upon any information or data furnished hereunder.

Sunset County Service Area - Zone 2A3

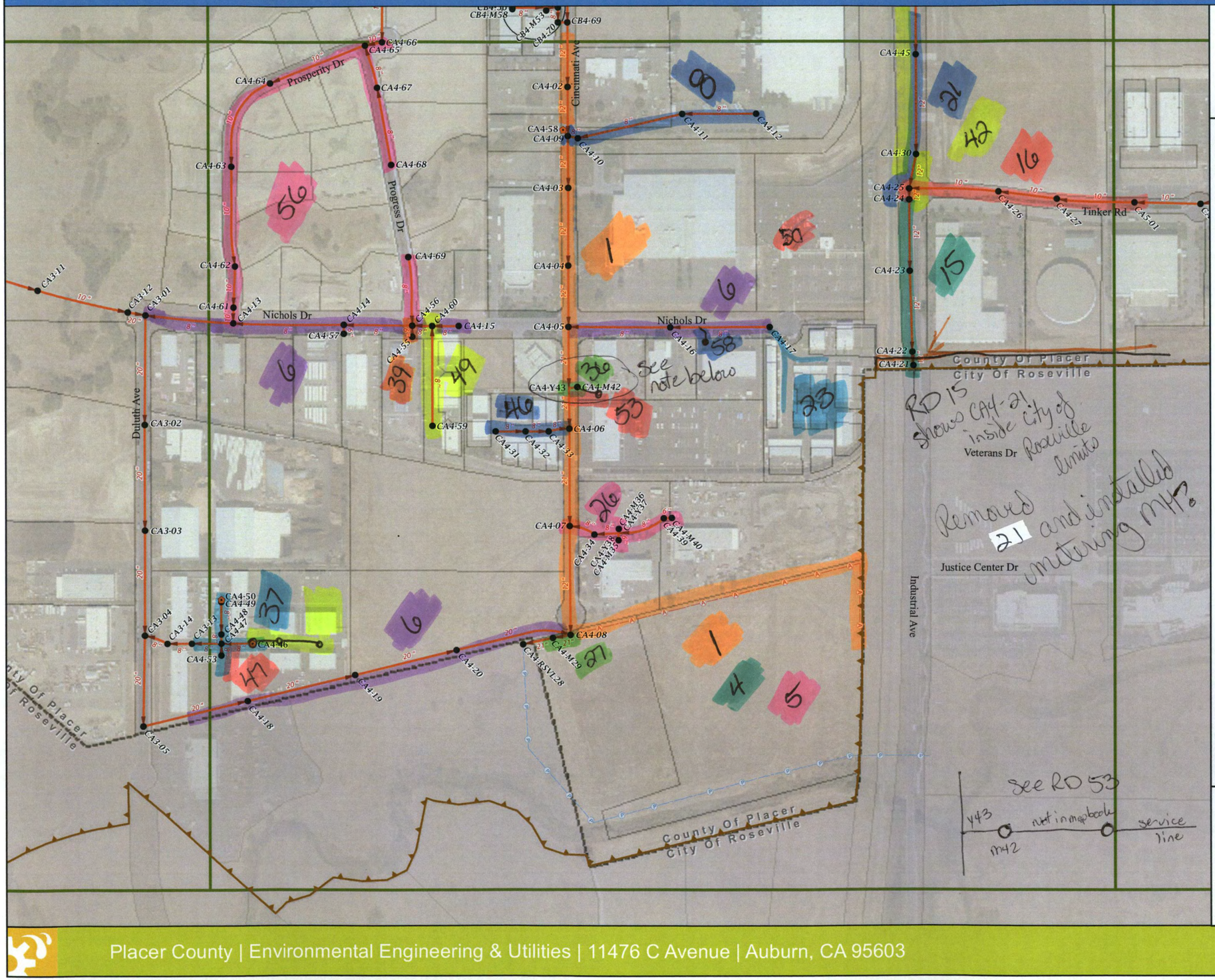

Sunset County Service Area - Zone 2A3

Map Page CA4

- Force Main
- Gravity Main
- Low Pressure
- Low Pressure Solids
- Siphon
- Vent
- Abandoned Sewer Main
- Private Sewer Main
- Air Relief Valve
- Air Vacuum Relief Valve
- Blow Off Valve
- Pressure Relief Valve
- Ball Valve
- Gate Valve
- Manhole
- Cleanout
- Cleanout In Manhole
- End Of Line
- Launch In Manhole
- Launch In Vault
- Receive/Launch In Manhole
- Receive/Launch In Vault
- Reducer
- Lift Station
- District Boundary
- County Step Tank
- Private Step Tank

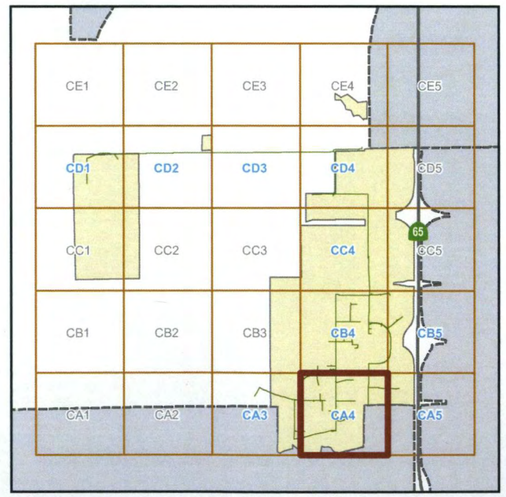

Created: 3/1/2011

N W E S

Feet
0 200 400 800

S:\FAC\GIS\Mapbook\MXD's\Sunset(Zone2A3)_MapBookPage.mxd

This information herein is a public resource and is not to be used for design purposes. The County of Placer makes no warranty, representation or guarantee as to the content, sequence, accuracy, timeliness or completeness of any of the cartographic or database information provided herein. The County of Placer explicitly disclaims any representations and warranties, including, without limitation, the implied warranties of merchantability and fitness for a particular purpose.
The County of Placer shall assume no liability for:
1. Any errors, omissions, or inaccuracies in the information provided, regardless of how caused; or
2. Any decision made for action taken or not taken by reader in reliance upon any information or data furnished hereunder.

Sunset County Service Area - Zone 2A3

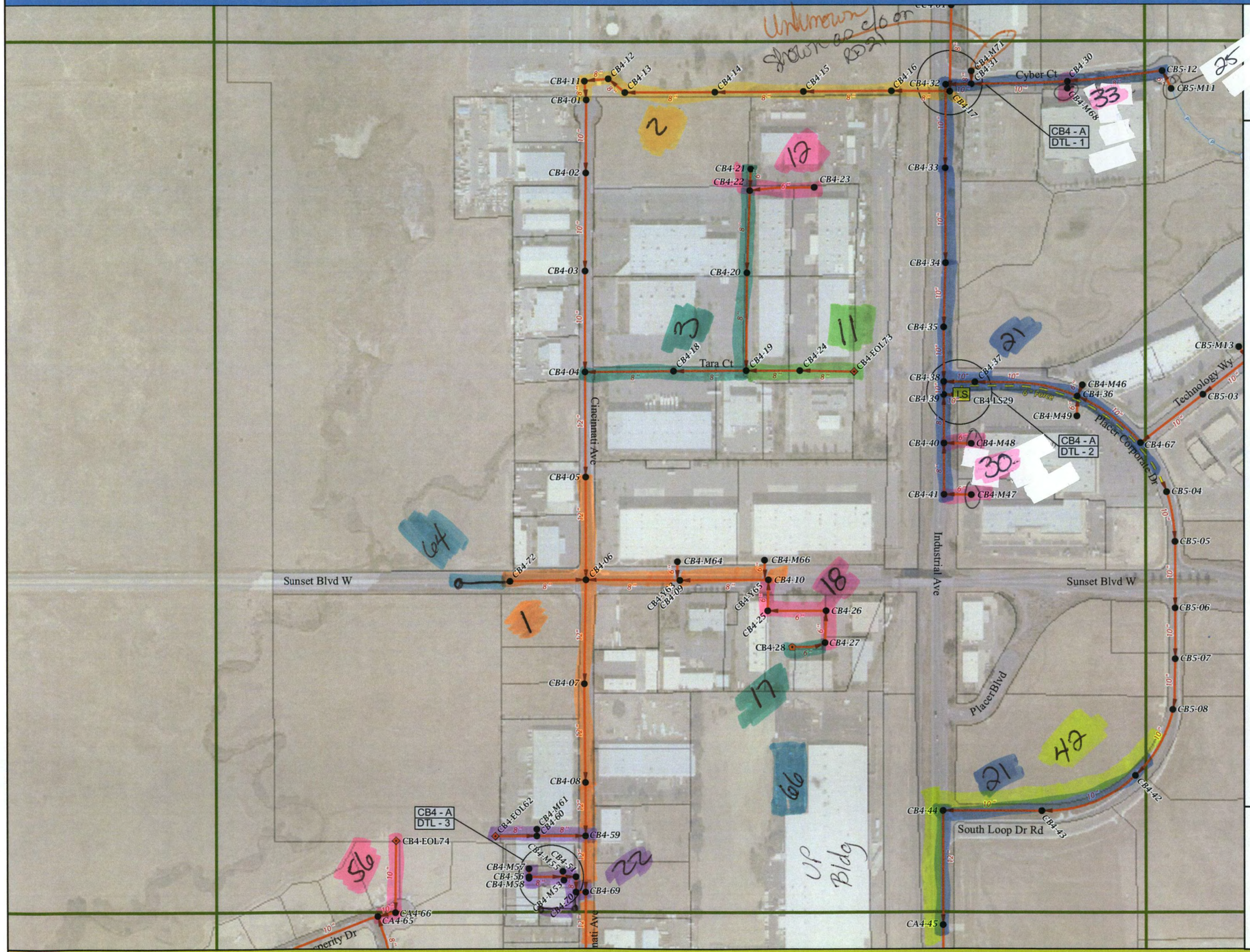

Sunset County Service Area - Zone 2A3

Map Page CB4

- Force Main
- Gravity Main
- Low Pressure
- Low Pressure Solids
- Siphon
- Vent
- Abandoned Sewer Main
- Private Sewer Main
- Air Relief Valve
- Air Vacuum Relief Valve
- Blow Off Valve
- Pressure Relief Valve
- Ball Valve
- Gate Valve
- Manhole
- Cleanout
- Cleanout In Manhole
- End Of Line
- Launch In Manhole
- Launch In Vault
- Receive/Launch In Manhole
- Receive/Launch In Vault
- Reducer
- Lift Station
- District Boundary
- County Step Tank
- Private Step Tank

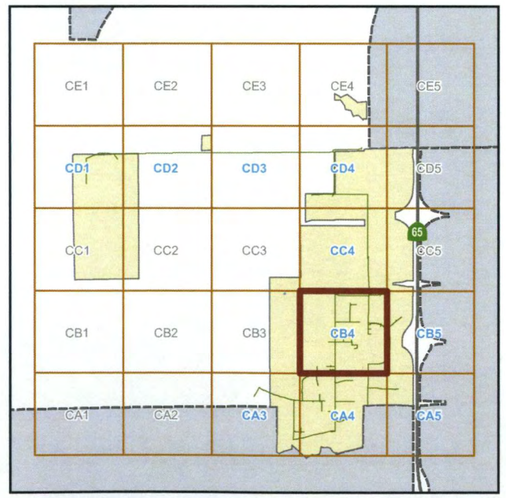

Created: 3/1/2011

N W E S

Feet
0 200 400 800

S:\FAC\GIS\Mapbook\MXD's\Sunset(Zone2A3)_MapBookPage.mxd

This information herein is a public resource and is not to be used for design purposes. The County of Placer makes no warranty, representation or guarantee as to the content, sequence, accuracy, timeliness or completeness of any of the cartographic or database information provided herein. The County of Placer explicitly disclaims any representations and warranties, including, without limitation, the implied warranties of merchantability and fitness for a particular purpose.
The County of Placer shall assume no liability for:
1. Any errors, omissions, or inaccuracies in the information provided, regardless of how caused; or
2. Any decision made for action taken or not taken by reader in reliance upon any information or data furnished hereunder.

OVERSIZED EXHIBITS

(Exhibits A to I)

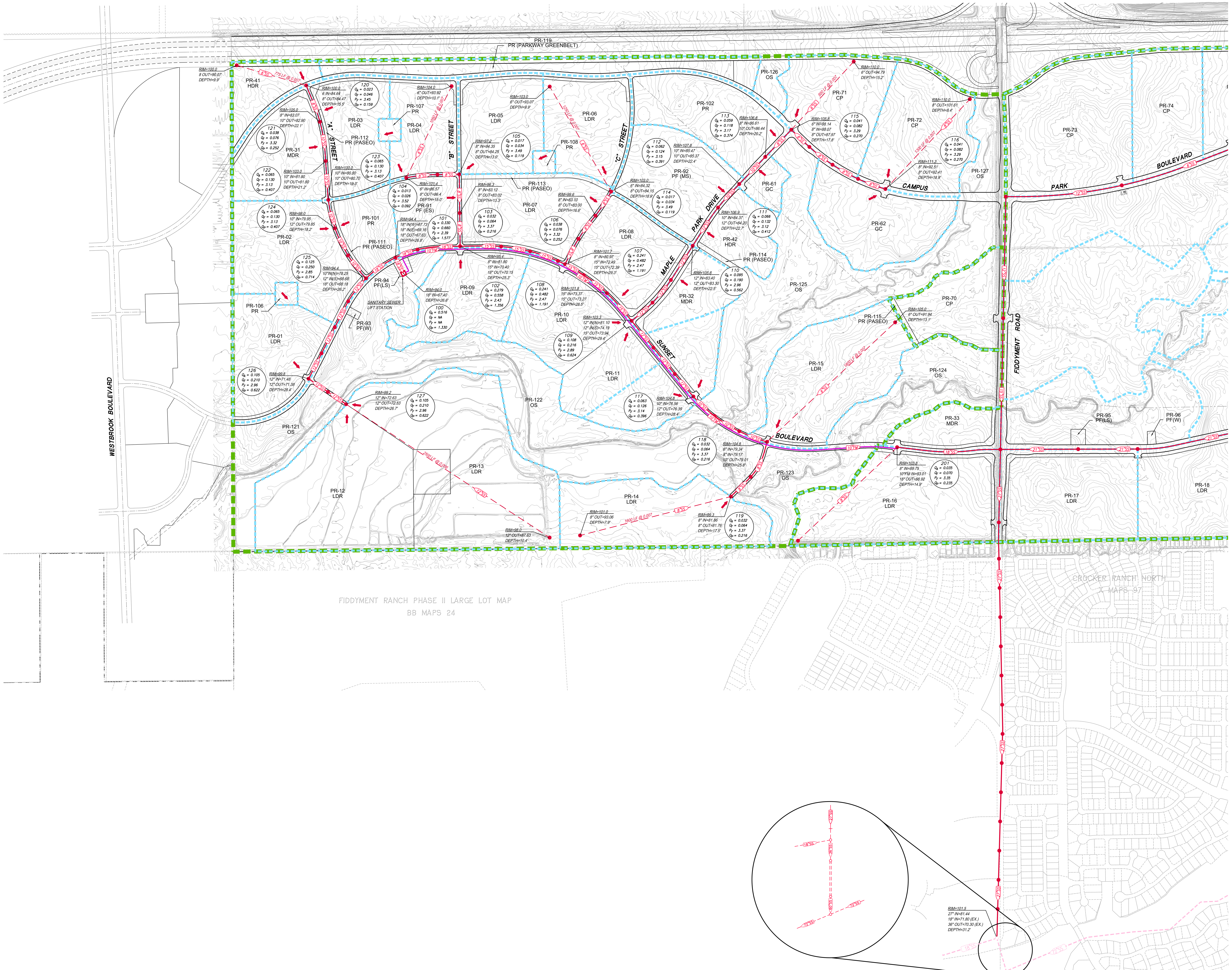

N

0 300 600

SCALE: 1"=300'

WESTERN SHED NODE DATA

PARCEL	LAND USE	AREA	PROJECTED EDU	TRIBUTARY TO NODE
PR-01	LDR	21.1	106	126
PR-02	LDR	26.3	132	124
PR-03	LDR	16.0	80	120
PR-04	LDR	13.9	70	104
PR-05	LDR	18.0	90	105
PR-06	LDR	18.4	92	114
PR-07	LDR	21.4	107	106
PR-08	LDR	17.6	88	109
PR-09	LDR	20.7	103	102
PR-10	LDR	19.8	99	109
PR-11	LDR	10.2	51	109
PR-11	LDR	10.3	51	117
PR-12	LDR	42.6	234	127
PR-13	LDR	57.5	316	127
PR-14	LDR	30.9	170	119
PR-15	LDR	32.7	163	118
PR-31	MDR	17.9	143	121
PR-32	MDR	10.4	83	117
PR-32	MDR	8.3	66	110
PR-41	HDR	8.2	176	120
PR-42	HDR	10.2	221	111
PR-61	GC	3.6		113
PR-62	GC	22.1		116
PR-71	CP	21.5		115
PR-72	CP	26.1		116
PR-91	PF (ES)	10.7		105
PR-92	PF (MS)	21.3		112
PR-101	PR	9.1		123
PR-102	PR	20.9		115
PR-106	PR	1.2		126
PR-107	PR	1.2		120
PR-108	PR	1.2		105
PR-111	PR	0.6		123
PR-112	PR	0.6		121
PR-113	PR	1.8		105
PR-114	PR	0.6		110
PR-115	PR	0.6		118

LEGEND

MAJOR SHED BOUNDARY
MINOR SHED LINE
FM — SEWER FORCE MAIN
12"SS — SEWER TRUNK LINE
12"SS — EXISTING SEWER LINE
8"SS — SCHEMATIC SEWER LINE
NODE POINT
SHED FLOW DIRECTION
PR-11 LDR — PARCEL ID AND LAND USE DESIGNATION

NODE — NODE NUMBER
Q_A = 0.029 — AVERAGE DRY WEATHER FLOW, (MGD)
Q_F = 0.058 — FACTORED FLOW, (MGD)
P_F = 3.39 — PEAKING FACTOR
Q_P = 0.197 — PEAK WET WEATHER FLOW, (MGD)

Exhibit A

Sanitary Sewer Master Plan

Western Shed (Scenarios 1 & 2)

Placer Ranch Specific Plan

Placer County
Scale 1"=300'

MACKAY & SOMPS
ENGINEERS PLANNERS SURVEYORS
1552 Eureka Road, Suite 100, Roseville, CA 95661 (916) 773-1189

California
September 1, 2017
Job No 18458.C00

MacKay and Somps is not responsible for the accuracy or completeness of reproductions of this document generated by others from electronic media.

9-01-2017 07:30:48 elaroyo P:\18458_C00\MstrPln\SS\Exhibits\PR-SSMP-Exh A_WS_S1 S2.dwg
[1] P:\18458_C00\SRV\Topo\Aerial\D-TP-PR-W.dwg [2] P:\18458_C00\MstrPln\Boses\M-ADJ-PR.dwg [3] P:\18458_C00\SRV\Topo\Aerial\D-TP-PR-E.dwg [4] P:\18458_C00\MstrPln\SS\bases\M-SSMP-SHEDS-PR.dwg [5] P:\18458_C00\PLN\P-LU-Placer Ranch.dwg

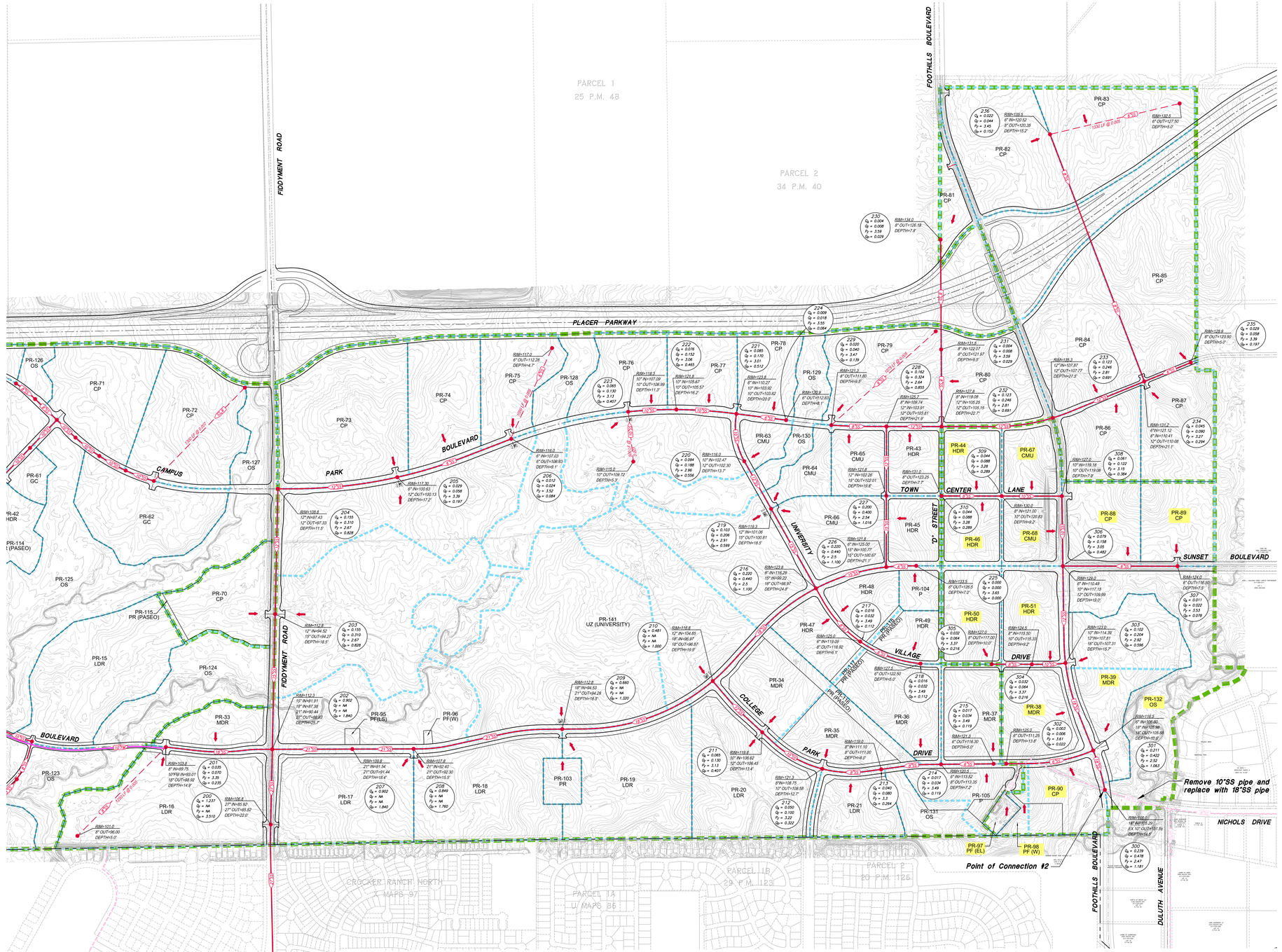

CENTRAL SHED NODE DATA

PARCEL	LAND USE	AREA	PROJECTED EDU	TRIBUTARY TO NODE
PR-16	LDR	36.8	184	201
PR-17	LDR	26.3	132	208
PR-18	LDR	30.0	150	208
PR-19	LDR	30.5	153	209
PR-20	LDR	27.9	140	211
PR-21	LDR	10.0	50	213
PR-33	MDR	7.9	63	202
PR-34	MDR	11.5	92	211
PR-35	MDR	8.7	78	212
PR-36	MDR	15.2	121	214
PR-37	MDR	11.3	91	215
PR-43	HDR	7.2	155	232
PR-45	HDR	7.2	156	227
PR-47	HDR	8.4	181	217
PR-48	HDR	7.7	167	217
PR-49	HDR	5.7	122	218
PR-63	CMU	4.1		220
PR-64	CMU	6.1		219
PR-65	CMU	7.9		229
PR-66	CMU	15.7		219
PR-70	CP	15.5		203
PR-73	CP	35.2		205
PR-74	CP	19.6		206
PR-75	CP	14.4		206
PR-76	CP	12.9		223
PR-77	CP	11.0		222
PR-78	CP	10.4		224
PR-79	CP	23.8		229
PR-80	CP	17.6		231
PR-81	CP	4.5		230
PR-82	CP	26.9		234
PR-83	CP	26.4		236
PR-84	CP	25.7		234
PR-85	CP	33.9		235
PR-86	CP	13.8		234
PR-87	CP	18.3		234
PR-103	PR	4.0		209
PR-104	P	3.6		225
PR-105	P	9.5		215
PR-141	UZ (UNIVERSITY)	28.1		223
PR-141	UZ (UNIVERSITY)	27.2		219
PR-141	UZ (UNIVERSITY)	32.0		210
PR-141	UZ (UNIVERSITY)	69.5		209
PR-141	UZ (UNIVERSITY)	41.7		205
PR-141	UZ (UNIVERSITY)	52.7		203

EASTERN SHED NODE DATA

PARCEL	LAND USE	AREA	PROJECTED EDU	TRIBUTARY TO NODE
PR-38	MDR	12.9	103	303
PR-39	MDR	16.9	135	303
PR-39	MDR	10.3	82	301
PR-44	HDR	7.9	171	310
PR-46	HDR	7.9	171	310
PR-50	HDR	11.4	247	305
PR-51	HDR	11.2	243	304
PR-67	CMU	7.6		309
PR-68	CMU	7.5		308
PR-88	CP	13.2		307
PR-89	CP	13.4		307
PR-90	CP	11.4		302
PR-97	PF (EL)	1.8		302
PR-98	PF (W)	2.1		302

LEGEND

- MAJOR SHED BOUNDARY
- MINOR SHED LINE
- FM — SEWER FORCE MAIN
- 12"SS — SEWER TRUNK LINE
- 8"SS — EXISTING SEWER LINE
- 8"SS — SCHEMATIC SEWER LINE
- NODE POINT
- SHED FLOW DIRECTION
- PR-11 LDR — PARCEL ID AND LAND USE DESIGNATION
- PR-76 LDR — PARCEL ID AND LAND USE DESIGNATION (EASTERN WATER SHED)
- NODE — NODE NUMBER; Q_a = AVERAGE DRY WEATHER FLOW, (MGD); Q_f = FACTORED FLOW, (MGD); P_f = PEAKING FACTOR; Q_p = PEAK WET WEATHER FLOW, (MGD)

Exhibit B - Scenario 1
Sanitary Sewer Master Plan
PRSP Only (Base Condition)
Central & Eastern Sheds

Placer Ranch Specific Plan

Placer County
Scale 1"=300'

MacKAY & SOMPS
ENGINEERS PLANNERS SURVEYORS
1552 Eureka Road, Suite 100, Roseville, CA 95661 (916) 773-1100

California
September 1, 2017
Job No 18458.C00

Plotted: 01:38 PM 9/1/2017 By: mhiller
J:\18458.C00\Work\12-Exhibits\18458.C00 Exhibit B - Scenario 1.dwg [12] = J:\18458.C00\Work\12-Exhibits\18458.C00 Exhibit B - Scenario 1.dwg [11] = J:\18458.C00\Work\12-Exhibits\18458.C00 Exhibit B - Scenario 1.dwg [10] = J:\18458.C00\Work\12-Exhibits\18458.C00 Exhibit B - Scenario 1.dwg [9] = J:\18458.C00\Work\12-Exhibits\18458.C00 Exhibit B - Scenario 1.dwg [8] = J:\18458.C00\Work\12-Exhibits\18458.C00 Exhibit B - Scenario 1.dwg [7] = J:\18458.C00\Work\12-Exhibits\18458.C00 Exhibit B - Scenario 1.dwg [6] = J:\18458.C00\Work\12-Exhibits\18458.C00 Exhibit B - Scenario 1.dwg [5] = J:\18458.C00\Work\12-Exhibits\18458.C00 Exhibit B - Scenario 1.dwg [4] = J:\18458.C00\Work\12-Exhibits\18458.C00 Exhibit B - Scenario 1.dwg [3] = J:\18458.C00\Work\12-Exhibits\18458.C00 Exhibit B - Scenario 1.dwg [2] = J:\18458.C00\Work\12-Exhibits\18458.C00 Exhibit B - Scenario 1.dwg [1] = J:\18458.C00\Work\12-Exhibits\18458.C00 Exhibit B - Scenario 1.dwg
Xrefs: ...
Images: ...
Fonts: ...
Plot Style: ...
Plot Scale: ...
Plot Device: ...
Layout: ...

Notice: This drawing is generated by an AutoCAD software program and is the property of MacKay & Somps. Any reuse, modification, reproduction or conversion of this drawing for any purpose or project other than the specific project for which it was prepared without the written consent of MacKay & Somps is prohibited. Any such unauthorized use shall be at the user's sole risk and without liability to MacKay & Somps.

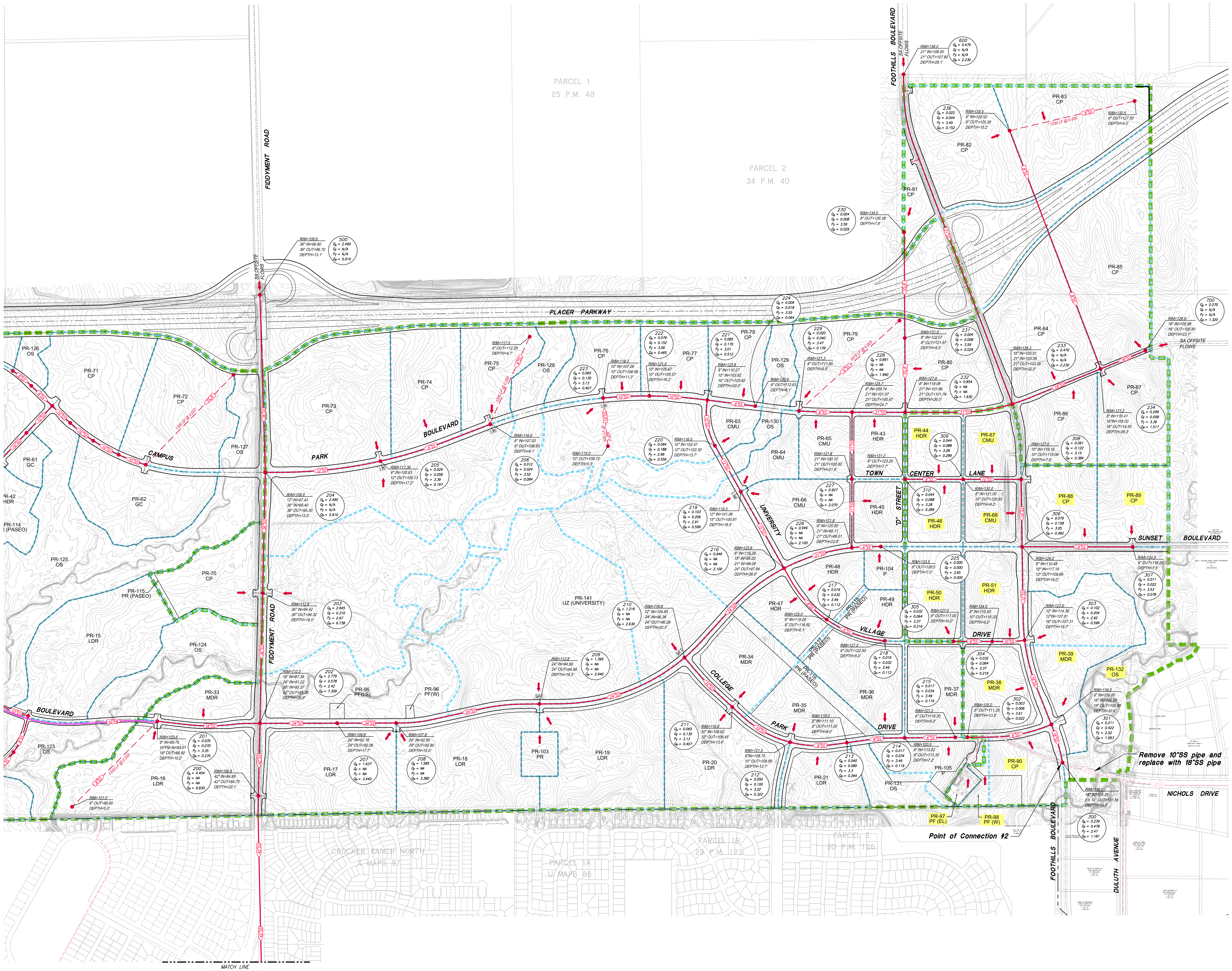

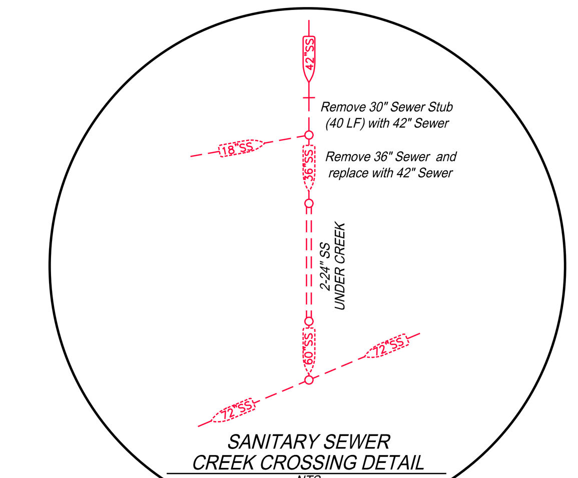

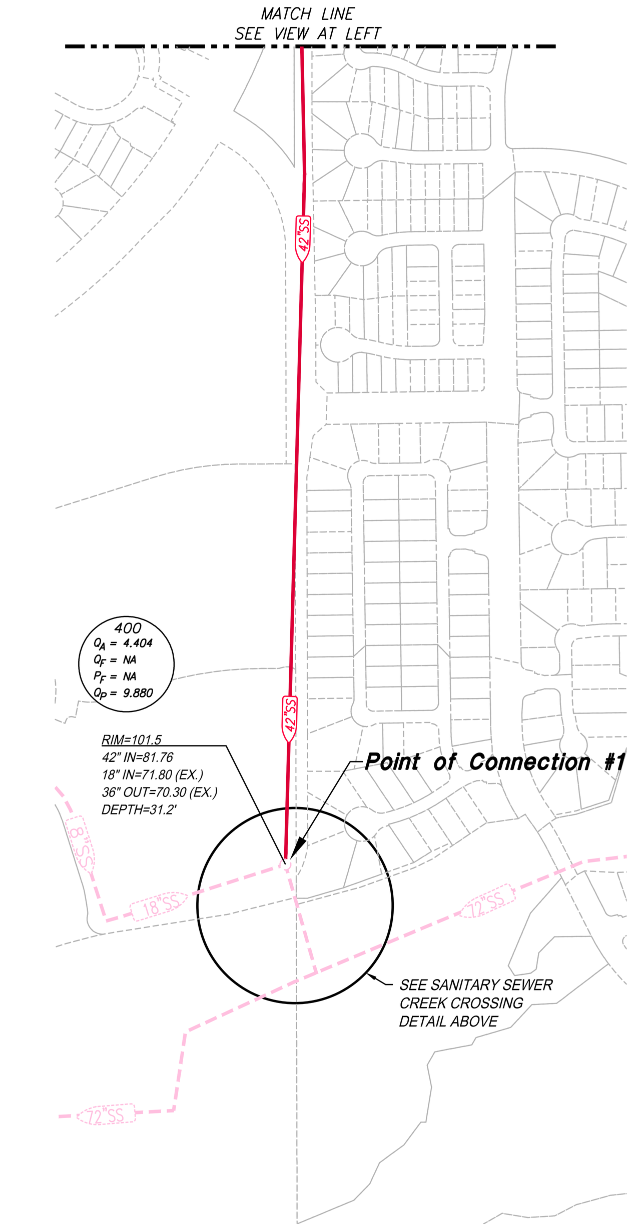

CENTRAL SHED NODE DATA

PARCEL	LAND USE	AREA	PROJECTED EDU	TRIBUTARY TO NODE
PR-16	LDR	36.8	184	201
PR-17	LDR	26.3	132	208
PR-18	LDR	30.0	150	208
PR-19	LDR	30.5	153	209
PR-20	LDR	27.9	140	211
PR-21	LDR	10.0	50	213
PR-33	MDR	7.9	63	202
PR-34	MDR	11.5	92	211
PR-35	MDR	9.7	78	212
PR-36	MDR	15.2	122	214
PR-37	MDR	11.3	91	215
PR-43	HDR	7.2	155	232
PR-45	HDR	7.2	156	227
PR-47	HDR	8.4	181	217
PR-48	HDR	7.7	167	217
PR-49	HDR	5.7	122	218
PR-63	CMU	4.1		220
PR-64	CMU	6.1		219
PR-65	CMU	7.9		229
PR-66	CMU	15.7		219
PR-70	CP	15.5		203
PR-73	CP	35.2		205
PR-74	CP	19.6		206
PR-75	CP	14.4		206
PR-76	CP	12.9		223
PR-77	CP	11.0		222
PR-78	CP	10.4		224
PR-79	CP	23.7		229
PR-80	CP	17.6		231
PR-81	CP	4.5		230
PR-82	CP	26.9		234
PR-83	CP	26.4		236
PR-84	CP	25.7		234
PR-85	CP	33.9		700
PR-86	CP	13.8		234
PR-87	CP	18.3		234
PR-103	PR	4.0		209
PR-104	P	3.6		225
PR-105	P	9.5		215
PR-141	UZ (UNIVERSITY)	28.1		223
PR-141	UZ (UNIVERSITY)	27.2		219
PR-141	UZ (UNIVERSITY)	32.0		210
PR-141	UZ (UNIVERSITY)	69.5		209
PR-141	UZ (UNIVERSITY)	41.7		205
PR-141	UZ (UNIVERSITY)	52.7		203

EASTERN SHED NODE DATA

PARCEL	LAND USE	AREA	PROJECTED EDU	TRIBUTARY TO NODE
PR-38	MDR	12.9	103	303
PR-39	MDR	16.9	135	303
PR-39	MDR	10.3	82	301
PR-44	HDR	7.9	171	310
PR-46	HDR	7.9	171	310
PR-50	HDR	11.4	247	305
PR-51	HDR	11.2	243	304
PR-67	CMU	7.6		309
PR-68	CMU	7.5		308
PR-88	CP	13.2		307
PR-89	CP	13.4		307
PR-90	CP	11.4		302
PR-97	PF (EL)	1.8		302
PR-98	PF (W)	2.1		302

LEGEND

- MAJOR SHED BOUNDARY
- MINOR SHED LINE
- SEWER FORCE MAIN
- SEWER TRUNK LINE
- EXISTING SEWER LINE
- SCHEMATIC SEWER LINE
- NODE POINT
- SHED FLOW DIRECTION
- PR-11 LDR — PARCEL ID AND LAND USE DESIGNATION
- PR-76 LDR — PARCEL ID AND LAND USE DESIGNATION (EASTERN WATER SHED)
- NODE — NODE NUMBER
- Q_A = 0.029 — AVERAGE DRY WEATHER FLOW, (MGD)
- Q_F = 0.058 — FACTORED FLOW, (MGD)
- P_F = 3.39 — PEAKING FACTOR
- Q_P = 0.197 — PEAK WET WEATHER FLOW, (MGD)

N

0 300 600
SCALE: 1"=300'

Exhibit C - Scenario 1
Sanitary Sewer Master Plan
PRSP + Future SA Offsite
Central & Eastern Sheds

Placer Ranch Specific Plan

Placer County
Scale 1"=300'

MACKAY & SOMPS
ENGINEERS PLANNERS SURVEYORS
1552 Eureka Road, Suite 100, Roseville, CA 95661 (916) 773-1189

California
September 1, 2017
Job No 18458.C00

MacKay and Somps is not responsible for the accuracy or completeness of reproductions of this document generated by others from electronic media.

9-01-2017 08:01:25 etaroyo P:\18458_C00\MstrPln\SS\Exhibits\PR-SSMP-Exh C_BC w OF_S1.dwg

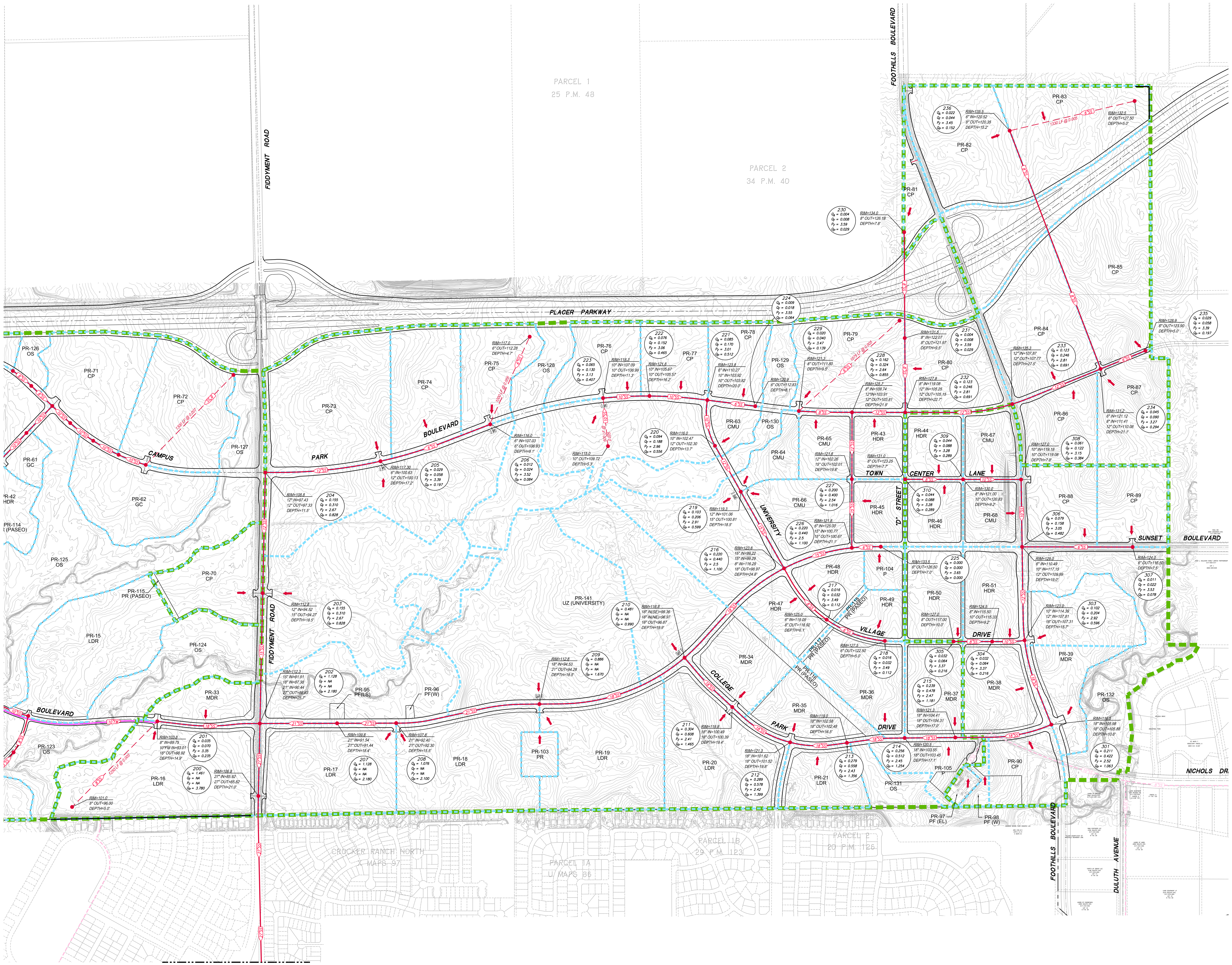

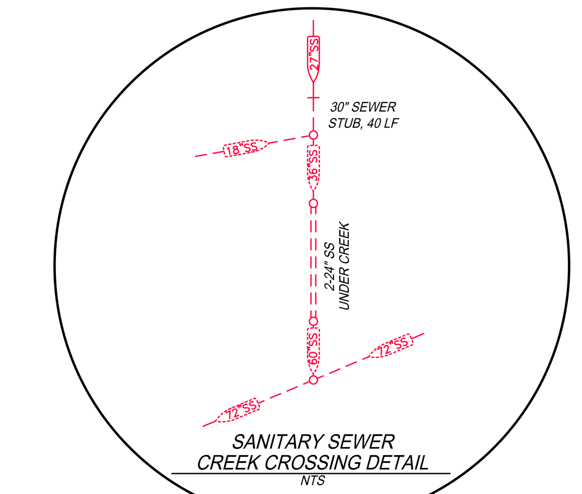

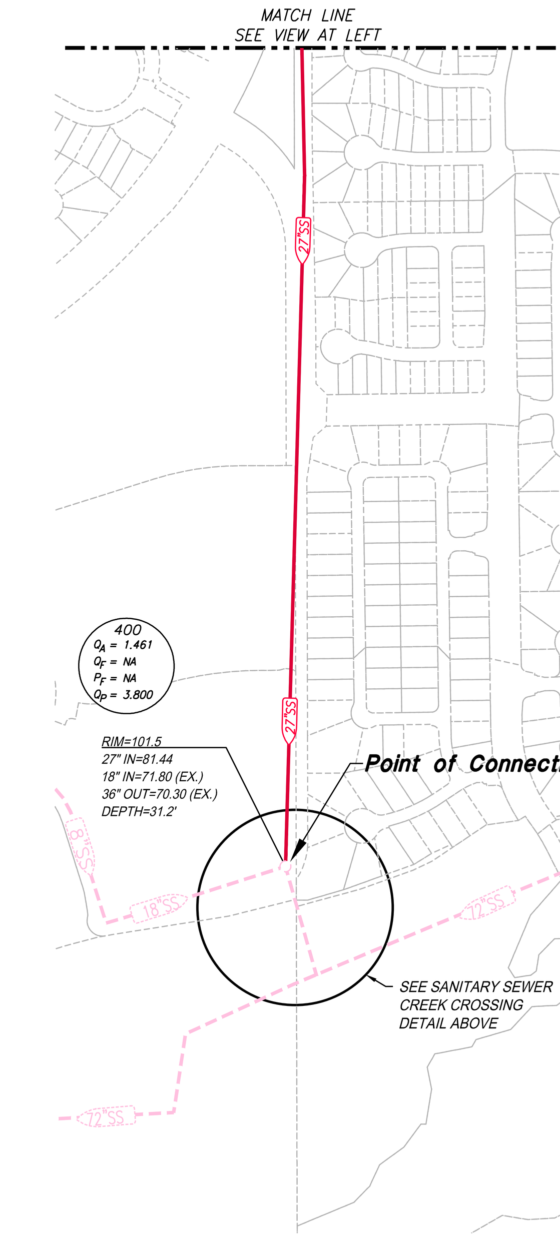

EASTERN SHED NODE DATA				
PARCEL	LAND USE	AREA	PROJECTED EDU	TRIBUTARY TO NODE
PR-16	LDR	36.8	184	201
PR-17	LDR	26.3	132	208
PR-18	LDR	30.0	150	208
PR-19	LDR	30.5	153	209
PR-20	LDR	27.9	140	210
PR-21	LDR	10.0	50	212
PR-33	MDR	7.9	63	202
PR-34	MDR	11.5	92	210
PR-35	MDR	9.7	78	211
PR-36	MDR	15.2	121	213
PR-37	MDR	11.3	91	214
PR-38	MDR	12.9	103	303
PR-39	MDR	16.9	135	303
PR-39	MDR	10.3	82	301
PR-43	HDR	7.2	155	232
PR-44	HDR	7.9	171	310
PR-45	HDR	7.2	156	227
PR-46	HDR	7.9	171	310
PR-47	HDR	8.4	181	217
PR-48	HDR	7.7	167	217
PR-49	HDR	5.7	122	218
PR-50	HDR	11.4	247	305
PR-51	HDR	11.2	243	304
PR-63	CMU	4.1		220
PR-64	CMU	6.1		219
PR-65	CMU	7.9		229
PR-66	CMU	15.7		219
PR-67	CMU	7.6		309
PR-68	CMU	7.5		308
PR-70	CP	15.5		203
PR-73	CP	35.2		205
PR-74	CP	19.6		206
PR-75	CP	14.4		206
PR-76	CP	12.9		223
PR-77	CP	11.0		222
PR-78	CP	10.4		224
PR-79	CP	23.8		229
PR-80	CP	17.6		231
PR-81	CP	4.5		230
PR-82	CP	26.9		234
PR-83	CP	26.4		236
PR-84	CP	25.7		234
PR-85	CP	33.9		235
PR-86	CP	13.8		234
PR-87	CP	18.3		234
PR-88	CP	13.2		307
PR-89	CP	13.4		307
PR-90	CP	11.4		215
PR-97	PF (EL)	1.8		215
PR-98	PF (W)	2.1		215
PR-103	PR	4.0		209
PR-104	P	3.6		225
PR-105	P	9.5		214
PR-141	UZ (UNIVERSITY)	28.1		223
PR-141	UZ (UNIVERSITY)	27.2		219
PR-141	UZ (UNIVERSITY)	32.0		210
PR-141	UZ (UNIVERSITY)	69.5		209
PR-141	UZ (UNIVERSITY)	41.7		205
PR-141	UZ (UNIVERSITY)	52.7		203

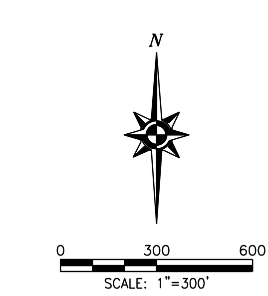

LEGEND

MAJOR SHED BOUNDARY
MINOR SHED LINE
FM SEWER FORCE MAIN
12"SS SEWER TRUNK LINE
12"SS EXISTING SEWER LINE
8"SS SCHEMATIC SEWER LINE
NODE POINT
SHED FLOW DIRECTION
PR-11 LDR PARCEL ID AND LAND USE DESIGNATION

NODE — NODE NUMBER
Q_A = 0.029 — AVERAGE DRY WEATHER FLOW, (MGD)
Q_F = 0.058 — FACTORED FLOW, (MGD)
P_F = 3.39 — PEAKING FACTOR
Q_P = 0.197 — PEAK WET WEATHER FLOW, (MGD)

Exhibit D - Scenario 2
Sanitary Sewer Master Plan
PRSP Only (Base Condition)
Eastern Shed

Placer Ranch Specific Plan

Placer County
Scale 1"=300'

MACKAY & SOMPS
ENGINEERS PLANNERS SURVEYORS
1552 Eureka Road, Suite 100, Roseville, CA 95661 (916) 773-1189

California
September 1, 2017
Job No 18458.C00

MacKay and Somps is not responsible for the accuracy or completeness of reproductions of this document generated by others from electronic media.

9-01-2017 08:26:20 elaroya

Made by Sacramento Area Council of Governments (SACOG) for its own purposes. Data may not be sufficient for subsequent uses or purposes. Reproduction of this document generated by software from electronic media is prohibited.

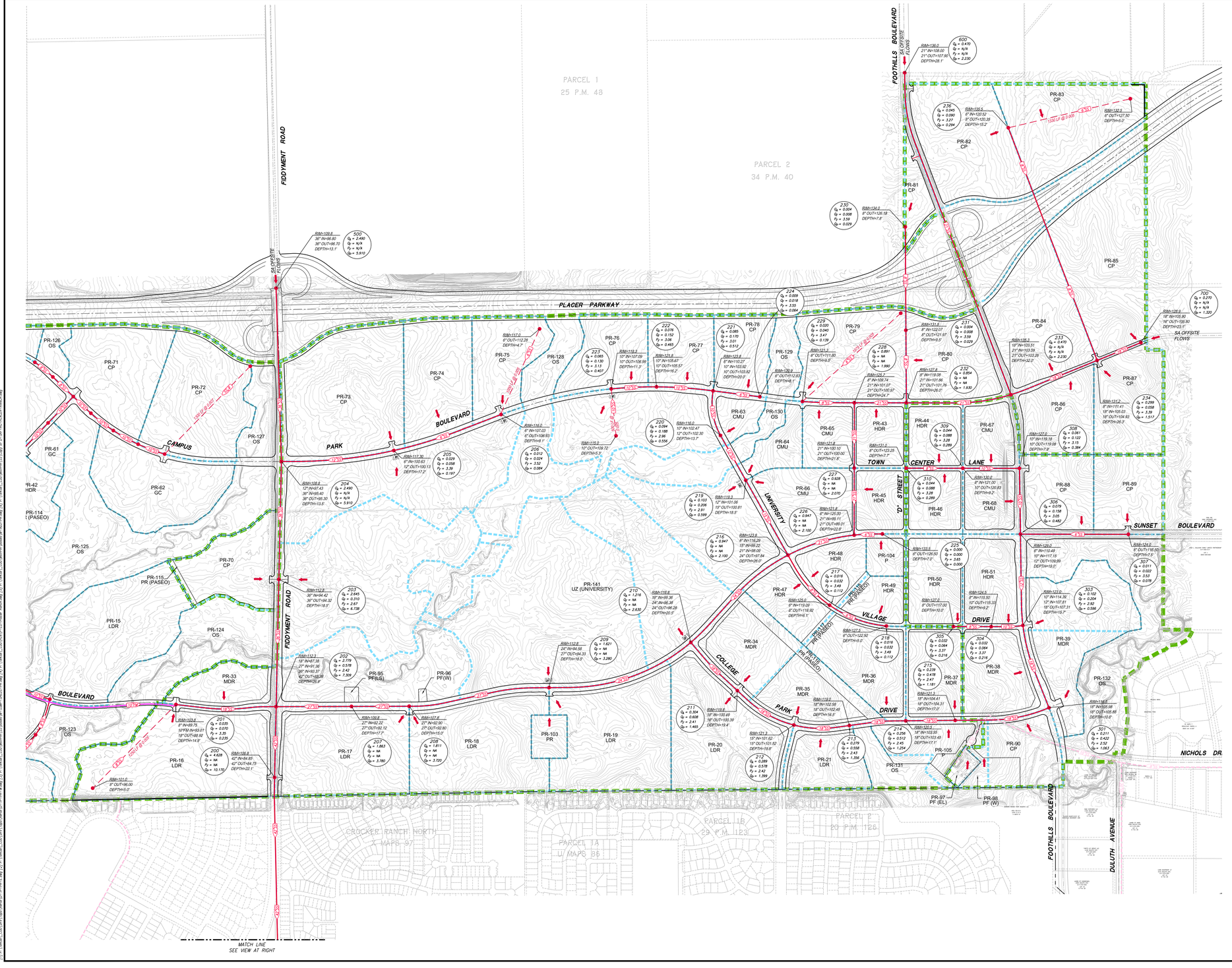

EASTERN SHED NODE DATA				
PARCEL	LAND USE	AREA	PROJECTED EDU	TRIBUTARY TO NODE
PR-16	LDR	36.8	184	201
PR-17	LDR	26.3	132	208
PR-18	LDR	30.0	150	208
PR-19	LDR	30.5	153	209
PR-20	LDR	27.9	140	210
PR-21	LDR	10.0	50	212
PR-33	MDR	7.9	63	202
PR-34	MDR	11.5	92	210
PR-35	MDR	9.7	78	211
PR-36	MDR	15.2	121	213
PR-37	MDR	11.3	91	214
PR-38	MDR	12.9	103	303
PR-39	MDR	16.9	135	303
PR-39	MDR	10.3	82	301
PR-43	HDR	7.2	155	232
PR-44	HDR	7.9	171	310
PR-45	HDR	7.2	156	227
PR-46	HDR	7.9	171	310
PR-47	HDR	8.4	181	217
PR-48	HDR	7.7	167	217
PR-49	HDR	5.7	122	218
PR-50	HDR	11.4	247	305
PR-51	HDR	11.2	243	304
PR-63	CMU	4.1		220
PR-64	CMU	6.1		219
PR-65	CMU	7.9		229
PR-66	CMU	15.7		219
PR-67	CMU	7.6		309
PR-68	CMU	7.5		308
PR-70	CP	15.5		203
PR-73	CP	35.2		205
PR-74	CP	19.6		206
PR-75	CP	14.4		206
PR-76	CP	12.9		223
PR-77	CP	11.0		222
PR-78	CP	10.4		224
PR-79	CP	23.6		229
PR-80	CP	17.6		231
PR-81	CP	4.5		230
PR-82	CP	26.9		234
PR-83	CP	26.4		236
PR-84	CP	25.7		234
PR-85	CP	33.9		700
PR-86	CP	13.8		234
PR-87	CP	18.3		234
PR-88	CP	13.2		307
PR-89	CP	13.4		307
PR-90	CP	11.4		215
PR-97	PF (EL)	1.8		215
PR-98	PF (W)	2.1		215
PR-103	PR	4.0		209
PR-104	P	3.6		225
PR-105	P	9.5		214
PR-141	UZ (UNIVERSITY)	28.1		223
PR-141	UZ (UNIVERSITY)	27.2		219
PR-141	UZ (UNIVERSITY)	32.0		210
PR-141	UZ (UNIVERSITY)	69.5		209
PR-141	UZ (UNIVERSITY)	41.7		205
PR-141	UZ (UNIVERSITY)	52.7		203

LEGEND

- MAJOR SHED BOUNDARY
- MINOR SHED LINE
- FM — SEWER FORCE MAIN
- 12"SS — SEWER TRUNK LINE
- 12"SS — EXISTING SEWER LINE
- 8"SS — SCHEMATIC SEWER LINE
- NODE POINT
- SHED FLOW DIRECTION
- PR-11 LDR — PARCEL ID AND LAND USE DESIGNATION

NODE
Q_A = 0.029 — AVERAGE DRY WEATHER FLOW, (MGD)
Q_B = 0.058 — FACTORED FLOW, (MGD)
F_P = 3.39 — PEAKING FACTOR
Q_P = 0.197 — PEAK WET WEATHER FLOW, (MGD)

N

0 300 600
SCALE: 1"=300'

Exhibit E - Scenario 2
Sanitary Sewer Master Plan
PRSP + Future SA Offsite
Eastern Shed

Placer Ranch Specific Plan

Placer County
Scale 1"=300'

MacKAY & SOMPS
ENGINEERS PLANNERS SURVEYORS
1552 Eureka Road, Suite 100, Roseville, CA 95661 (916) 773-1100

California
September 1, 2017
Job No 18458.C00

G:\[1-18458\...\C00\Maps\Exhibits\EXC\18458 EXC Exhibit E - 2.dwg, 8.5" x 11" (Landscape), 9/1/2017 10:51:00 AM, Adobe PDF

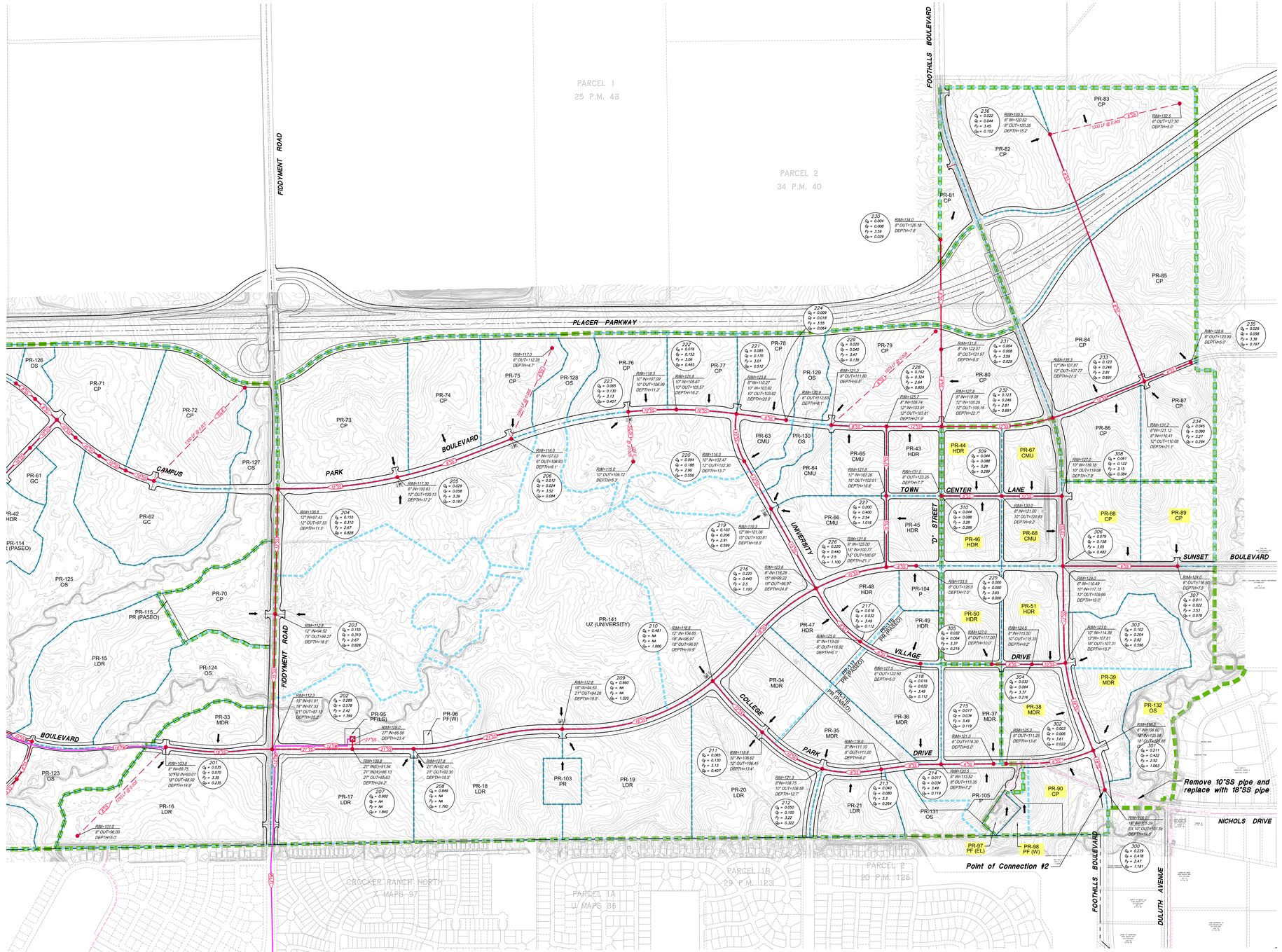

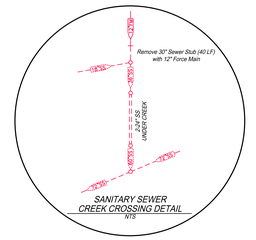

CENTRAL SHED NODE DATA

PARCEL	LAND USE	AREA	PROJECTED EDU	TRIBUTARY TO NODE
PR-16	LDR	36.8	184	201
PR-17	LDR	26.3	132	208
PR-18	LDR	30.0	150	208
PR-19	LDR	30.5	153	209
PR-20	LDR	27.9	140	211
PR-21	LDR	10.0	50	213
PR-33	MDR	7.9	63	202
PR-34	MDR	11.5	92	211
PR-35	MDR	8.7	78	212
PR-36	MDR	15.2	121	214
PR-37	MDR	11.3	91	215
PR-43	HDR	7.2	155	232
PR-45	HDR	7.2	156	227
PR-47	HDR	6.4	161	217
PR-48	HDR	7.7	167	217
PR-49	HDR	5.7	122	218
PR-63	CMU	4.1		220
PR-64	CMU	6.1		219
PR-65	CMU	7.9		229
PR-66	CMU	15.7		219
PR-70	CP	15.5		203
PR-73	CP	35.2		205
PR-74	CP	19.6		206
PR-75	CP	14.4		206
PR-76	CP	12.9		223
PR-77	CP	11.0		222
PR-78	CP	10.4		224
PR-79	CP	23.8		229
PR-80	CP	17.6		231
PR-81	CP	4.5		230
PR-82	CP	26.9		234
PR-83	CP	26.4		236
PR-84	CP	25.7		234
PR-85	CP	33.9		235
PR-86	CP	13.8		234
PR-87	CP	18.3		234
PR-103	PR	4.0		209
PR-104	P	3.6		225
PR-105	P	9.5		215
PR-141	UZ (UNIVERSITY)	28.1		223
PR-141	UZ (UNIVERSITY)	27.2		219
PR-141	UZ (UNIVERSITY)	32.0		210
PR-141	UZ (UNIVERSITY)	69.5		209
PR-141	UZ (UNIVERSITY)	41.7		205
PR-141	UZ (UNIVERSITY)	52.7		203

EASTERN SHED NODE DATA

PARCEL	LAND USE	AREA	PROJECTED EDU	TRIBUTARY TO NODE
PR-38	MDR	12.9	103	303
PR-39	MDR	16.9	135	303
PR-39	MDR	10.3	82	301
PR-44	HDR	7.9	171	310
PR-46	HDR	7.9	171	310
PR-50	HDR	11.4	247	305
PR-51	HDR	11.2	243	304
PR-67	CMU	7.6		309
PR-68	CMU	7.5		308
PR-88	CP	13.2		307
PR-89	CP	13.4		307
PR-90	CP	11.4		302
PR-97	PF (EL)	1.8		302
PR-98	PF (W)	2.1		302

LEGEND

- MAJOR SHED BOUNDARY
- MINOR SHED LINE
- FM — SEWER FORCE MAIN
- 12"SS — SEWER TRUNK LINE
- 8"SS — EXISTING SEWER LINE
- 8"SS — SCHEMATIC SEWER LINE
- NODE POINT
- SHED FLOW DIRECTION
- PR-11 LDR — PARCEL ID AND LAND USE DESIGNATION
- PR-76 LDR — PARCEL ID AND LAND USE DESIGNATION (EASTERN WATER SHED)
- NODE — NODE NUMBER; Q_A = AVERAGE DRY WEATHER FLOW, (MGD); Q_F = FACTORED FLOW, (MGD); P_F = PEAKING FACTOR; Q_P = PEAK WET WEATHER FLOW, (MGD)

N

0 300 600

SCALE: 1"=300'

Exhibit F - Scenario 1-LS
Sanitary Sewer Master Plan
PRSP Only (Base Condition)
Central & Eastern Sheds

Placer Ranch Specific Plan

Placer County
Scale 1"=300'

MacKAY & SOMPS
ENGINEERS PLANNERS SURVEYORS
1552 Eureka Road, Suite 100, Roseville, CA 95661 (916) 773-1100

California
September 1, 2017
Job No 1845S.C00

Plotted: 01:04:26 PM by Hidden — H:\1845S_C00\Working\12D\Exhibits\PRP_DMP\Cal_F_Exhibit\Cal_F_1-LS.dwg
[1] H:\1845S_C00\Work\Sewer\Cal_F\PR-Cal_F_Exhibit\Cal_F_1-LS.dwg [2] H:\1845S_C00\Work\Sewer\Cal_F\PR-Cal_F_Exhibit\Cal_F_1-LS.dwg [3] H:\1845S_C00\Work\Sewer\Cal_F\PR-Cal_F_Exhibit\Cal_F_1-LS.dwg [4] H:\1845S_C00\Work\Sewer\Cal_F\PR-Cal_F_Exhibit\Cal_F_1-LS.dwg [5] H:\1845S_C00\Work\Sewer\Cal_F\PR-Cal_F_Exhibit\Cal_F_1-LS.dwg
Xrefs: [1] H:\1845S_C00\Work\12D\Roads\PR_DMP_Cal_F_Exhibit.12d [2] H:\1845S_C00\Work\Sewer\Input Files\Cal_F\PR-Cal_F_Exhibit\Cal_F_1-LS_Base.dwg [3] H:\1845S_C00\Work\Sewer\Input Files\Cal_F\PR-Cal_F_Exhibit\Cal_F_1-LS_Base_Ranch.dwg [4] H:\1845S_C00\Work\Sewer\Cal_F\PR-Cal_F_Exhibit\Cal_F_1-LS_Base_Ranch_Xrefs.dwg [5] H:\1845S_C00\Work\Sewer\Cal_F\PR-Cal_F_Exhibit\Cal_F_1-LS_Base_Ranch_Xrefs_Sheet.dwg

Copyright © 2017 MacKay & Somps. All rights reserved. Unauthorized reproduction or dissemination of this drawing by any means, electronic, mechanical, or otherwise is prohibited without the prior written consent of MacKay & Somps.

Notice: This drawing is generated from electronic media. Reproduction or conversion of this drawing to any other media without the express written consent of MacKay & Somps is prohibited.

PARCEL 1
25 P.M. 48

PARCEL 2
34 P.M. 40

FIDDYMENT ROAD

FOOTHILLS BOULEVARD

PLACER PARKWAY

BOULEVARD

CAMPUS

PARK

UNIVERSITY

D" STREET

TOWN

CENTER

LANE

SUNSET

BOULEVARD

COLLEGE

PARK

VILLAGE

DRIVE

NICHOLS DRIVE

DULUTH AVENUE

FOOTHILLS BOULEVARD

SA OFFSITE FLOWS

SA OFFSITE FLOWS

MATCH LINE
SEE VIEW AT RIGHT

MATCH LINE
SEE VIEW AT LEFT

Remove 10"SS pipe and replace with 18"SS pipe

Point of Connection #1

Point of Connection #2

SEE SANITARY SEWER CREEK CROSSING DETAIL ABOVE

CROCKER RANCH NORTH
X MAPS 97

PARCEL 1B
29 P.M. 1123

PARCEL 1A
U MAPS 86

PARCEL 2
20 P.M. 126

SANITARY SEWER CREEK CROSSING DETAIL

N.T.S.

Remove 30" Sewer Stub (40 LF) with 20" Force Main

SANITARY SEWER UNDER CREEK

LEGEND

- MAJOR SHED BOUNDARY
- MINOR SHED LINE
- FM — SEWER FORCE MAIN
- 12"SS — SEWER TRUNK LINE
- 12"SS — EXISTING SEWER LINE
- 8"SS — SCHEMATIC SEWER LINE
- NODE POINT
- SHED FLOW DIRECTION
- PR-11 LDR — PARCEL ID AND LAND USE DESIGNATION
- PR-76 LDR — PARCEL ID AND LAND USE DESIGNATION (EASTERN WATER SHED)
- NODE: Q_A = 0.029, Q_B = 0.058, F_Y = 3.39, Q_{PK} = 0.197 — NODE NUMBER; AVERAGE DRY WEATHER FLOW, (MGD); FACTORED FLOW, (MGD); PEAKING FACTOR; PEAK WET WEATHER FLOW, (MGD)

N

0 300 600
SCALE: 1"=300'

CENTRAL SHED NODE DATA

PARCEL	LAND USE	AREA	PROJECTED EDU	TRIBUTARY TO NODE
PR-16	LDR	36.8	184	201
PR-17	LDR	26.3	132	208
PR-18	LDR	30.0	150	208
PR-19	LDR	30.5	153	209
PR-20	LDR	27.9	140	211
PR-21	LDR	10.0	50	213
PR-33	MDR	7.9	63	202
PR-34	MDR	11.5	92	211
PR-35	MDR	8.7	78	212
PR-36	MDR	15.2	122	214
PR-37	MDR	11.3	91	215
PR-43	HDR	7.2	155	232
PR-45	HDR	7.2	156	227
PR-47	HDR	6.4	161	217
PR-48	HDR	7.7	167	217
PR-49	HDR	5.7	122	218
PR-63	CMU	4.1		220
PR-64	CMU	6.1		219
PR-65	CMU	7.9		229
PR-66	CMU	15.7		219
PR-70	CP	15.5		203
PR-73	CP	35.2		205
PR-74	CP	19.6		206
PR-75	CP	14.4		206
PR-76	CP	12.9		223
PR-77	CP	11.0		222
PR-78	CP	10.4		224
PR-79	CP	23.7		229
PR-80	CP	17.6		231
PR-81	CP	4.5		230
PR-82	CP	26.9		234
PR-83	CP	26.4		236
PR-84	CP	25.7		234
PR-85	CP	33.9		700
PR-86	CP	13.8		234
PR-87	CP	18.3		234
PR-103	PR	4.0		209
PR-104	P	3.6		225
PR-105	P	9.5		215
PR-141	UZ (UNIVERSITY)	28.1		223
PR-141	UZ (UNIVERSITY)	27.2		219
PR-141	UZ (UNIVERSITY)	32.0		210
PR-141	UZ (UNIVERSITY)	69.5		209
PR-141	UZ (UNIVERSITY)	41.7		205
PR-141	UZ (UNIVERSITY)	52.7		203

EASTERN SHED NODE DATA

PARCEL	LAND USE	AREA	PROJECTED EDU	TRIBUTARY TO NODE
PR-38	MDR	12.9	103	303
PR-39	MDR	16.9	136	303
PR-39	MDR	10.3	82	301
PR-44	HDR	7.9	171	310
PR-46	HDR	7.9	171	310
PR-50	HDR	11.4	247	305
PR-51	HDR	11.2	243	304
PR-67	CMU	7.6		309
PR-68	CMU	7.5		308
PR-88	CP	13.2		307
PR-89	CP	13.4		307
PR-90	CP	11.4		302
PR-97	PF (EL)	1.8		302
PR-98	PF (W)	2.1		302

Exhibit G - Scenario 1-LS
Sanitary Sewer Master Plan
PRSP + Future SA Offsite
Central & Eastern Sheds

Placer Ranch Specific Plan

Placer County
Scale 1"=300'

MacKAY & SOMPS
ENGINEERS PLANNERS SURVEYORS
1552 Eureka Road, Suite 100, Roseville, CA 95661 (916) 773-1189

California
September 1, 2017
Job No 1845S.C00

Plotted: 09/07/17 08:44:57 by: mhope P:\1845S_DESIGN\CIVIL\EXCEL\Sheds\PRSP\Exhibit G - Scenario 1-LS\PRSP Exhibit G - Scenario 1-LS.dwg
P:\1845S_DESIGN\CIVIL\EXCEL\Sheds\PRSP\Exhibit G - Scenario 1-LS\PRSP Exhibit G - Scenario 1-LS.dwg
P:\1845S_DESIGN\CIVIL\Sewer\Exhibit G - Scenario 1-LS\PRSP Exhibit G - Scenario 1-LS.dwg
P:\1845S_DESIGN\CIVIL\Sewer\Exhibit G - Scenario 1-LS\PRSP Exhibit G - Scenario 1-LS.dwg

Made by Land Development Desktop Civil 3D. Copyright © 2016 Autodesk, Inc. All rights reserved. Unauthorized reproduction or dissemination of this document generated by software from Autodesk, Inc. is strictly prohibited.

Jun 01, 2017 - 08:13:36 - mhaley - P:\18400\...\Eastern Shed\Exhibit H - Scenario 2-LS.dwg

EASTERN SHED NODE DATA

PARCEL	LAND USE	AREA	PROJECTED EDU	TRIBUTARY TO NODE
PR-16	LDR	36.8	184	201
PR-17	LDR	26.3	132	208
PR-18	LDR	30.0	150	208
PR-19	LDR	30.5	153	209
PR-20	LDR	27.9	140	210
PR-21	LDR	10.0	50	212
PR-33	MDR	7.9	63	202
PR-34	MDR	11.5	92	210
PR-35	MDR	9.7	78	211
PR-36	MDR	15.2	121	213
PR-37	MDR	11.3	91	214
PR-38	MDR	12.9	103	303
PR-39	MDR	16.9	135	303
PR-39	MDR	10.3	82	301
PR-43	HDR	7.2	155	232
PR-44	HDR	7.9	171	310
PR-45	HDR	7.2	156	227
PR-46	HDR	7.9	171	310
PR-47	HDR	8.4	181	217
PR-48	HDR	7.7	167	217
PR-49	HDR	5.7	122	218
PR-50	HDR	11.4	247	305
PR-51	HDR	11.2	243	304
PR-63	CMU	4.1		220
PR-64	CMU	6.1		219
PR-65	CMU	7.9		229
PR-66	CMU	15.7		219
PR-67	CMU	7.6		309
PR-68	CMU	7.5		308
PR-70	CP	15.5		203
PR-73	CP	35.2		205
PR-74	CP	19.6		206
PR-75	CP	14.4		206
PR-76	CP	12.9		223
PR-77	CP	11.0		222
PR-78	CP	10.4		224
PR-79	CP	23.8		229
PR-80	CP	17.6		231
PR-81	CP	4.5		230
PR-82	CP	26.9		234
PR-83	CP	26.4		236
PR-84	CP	25.7		234
PR-85	CP	33.9		235
PR-86	CP	13.8		234
PR-87	CP	18.3		234
PR-88	CP	13.2		307
PR-89	CP	13.4		307
PR-90	CP	11.4		215
PR-97	PF (EL)	1.8		215
PR-98	PF (W)	2.1		215
PR-103	PR	4.0		209
PR-104	P	3.6		225
PR-105	P	9.5		214
PR-141	UZ (UNIVERSITY)	28.1		223
PR-141	UZ (UNIVERSITY)	27.2		219
PR-141	UZ (UNIVERSITY)	32.0		210
PR-141	UZ (UNIVERSITY)	69.5		209
PR-141	UZ (UNIVERSITY)	41.7		205
PR-141	UZ (UNIVERSITY)	52.7		203

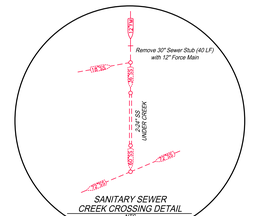

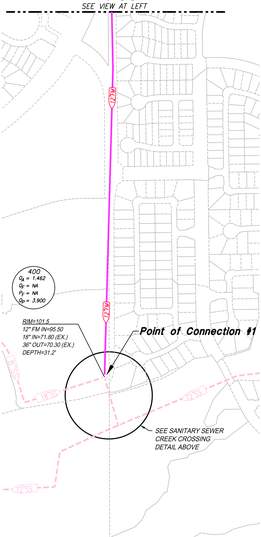

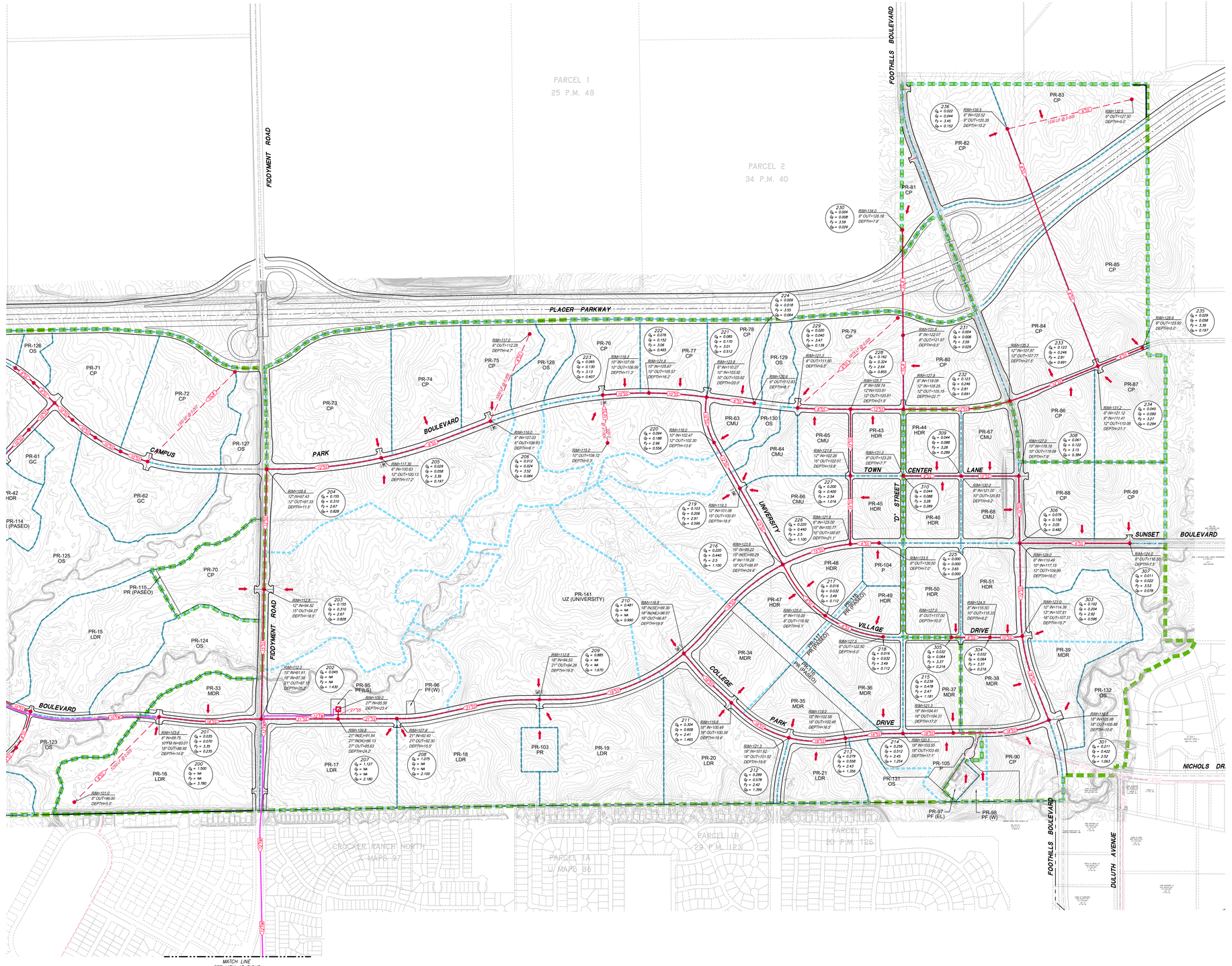

LEGEND

- MAJOR SHED BOUNDARY
- MINOR SHED LINE
- FM — SEWER FORCE MAIN
- 12"SS — SEWER TRUNK LINE
- 8"SS — EXISTING SEWER LINE
- 8"SS — SCHEMATIC SEWER LINE
- NODE POINT
- SHED FLOW DIRECTION
- PR-11 LDR — PARCEL ID AND LAND USE DESIGNATION

N

0 300 600

SCALE: 1"=300'

NODE
Q_A = 0.029
Q_M = 0.058
P_F = 3.39
Q_P = 0.197

- NODE NUMBER
- AVERAGE DRY WEATHER FLOW, (MGD)
- FACTORED FLOW, (MGD)
- PEAKING FACTOR
- PEAK WET WEATHER FLOW, (MGD)

Exhibit H - Scenario 2-LS
Sanitary Sewer Master Plan
PRSP Only (Base Condition)
Eastern Shed

Placer Ranch Specific Plan

Placer County
Scale 1"=300'

MacKAY & SOMPS
ENGINEERS PLANNERS SURVEYORS
1552 Eureka Road, Suite 100, Roseville, CA 95661 (916) 773-1100

California
September 1, 2017
Job No 18458.C00

Made by MacKay & Somps from electronic media provided by others. Reproduction or modification of this document without the written permission of MacKay & Somps is prohibited.

EASTERN SHED NODE DATA				
PARCEL	LAND USE	AREA	PROJECTED EDU	TRIBUTARY TO NODE
PR-16	LDR	36.8	184	201
PR-17	LDR	26.3	132	208
PR-18	LDR	30.0	150	208
PR-19	LDR	30.5	153	209
PR-20	LDR	27.9	140	210
PR-21	LDR	10.0	50	212
PR-33	MDR	7.9	63	202
PR-34	MDR	11.5	92	210
PR-35	MDR	9.7	78	211
PR-36	MDR	15.2	121	213
PR-37	MDR	11.3	91	214
PR-38	MDR	12.9	103	303
PR-39	MDR	16.9	135	303
PR-39	MDR	10.3	82	301
PR-43	HDR	7.2	155	232
PR-44	HDR	7.9	171	310
PR-45	HDR	7.2	156	227
PR-46	HDR	7.9	171	310
PR-47	HDR	8.4	181	217
PR-48	HDR	7.7	167	217
PR-49	HDR	5.7	122	218
PR-50	HDR	11.4	247	305
PR-51	HDR	11.2	243	304
PR-63	CMU	4.1		220
PR-64	CMU	6.1		219
PR-65	CMU	7.9		229
PR-66	CMU	15.7		219
PR-67	CMU	7.6		309
PR-68	CMU	7.5		308
PR-70	CP	15.5		203
PR-73	CP	35.2		205
PR-74	CP	19.6		206
PR-75	CP	14.4		206
PR-76	CP	12.9		223
PR-77	CP	11.0		222
PR-78	CP	10.4		224
PR-79	CP	23.8		229
PR-80	CP	17.6		231
PR-81	CP	4.5		230
PR-82	CP	26.9		234
PR-83	CP	26.4		236
PR-84	CP	25.7		234
PR-85	CP	33.9		700
PR-86	CP	13.8		234
PR-87	CP	18.3		234
PR-88	CP	13.2		307
PR-89	CP	13.4		307
PR-90	CP	11.4		215
PR-97	PF (EL)	1.8		215
PR-98	PF (W)	2.1		215
PR-103	PR	4.0		209
PR-104	P	3.6		225
PR-105	P	9.5		214
PR-141	UZ (UNIVERSITY)	28.1		223
PR-141	UZ (UNIVERSITY)	27.2		219
PR-141	UZ (UNIVERSITY)	32.0		210
PR-141	UZ (UNIVERSITY)	69.5		209
PR-141	UZ (UNIVERSITY)	41.7		205
PR-141	UZ (UNIVERSITY)	52.7		203

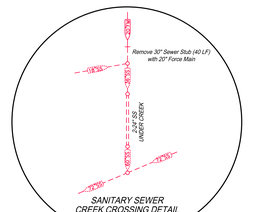

SANITARY SEWER CREEK CROSSING DETAIL
N.T.S.

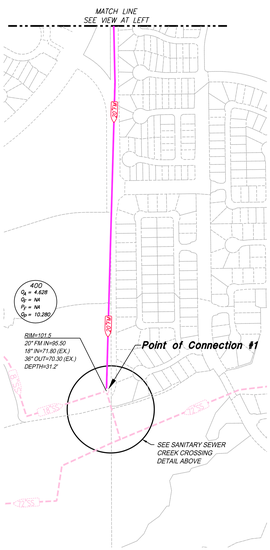

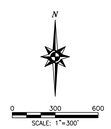

LEGEND

- MAJOR SHED BOUNDARY
- MINOR SHED LINE
- FM — SEWER FORCE MAIN
- 12"RCP — SEWER TRUNK LINE
- 8"RCP — EXISTING SEWER LINE
- 8"RCP — SCHEMATIC SEWER LINE
- NODE POINT
- SHED FLOW DIRECTION
- PR-11 LDR — PARCEL ID AND LAND USE DESIGNATION

NODE
- Q_A = 0.029 — NODE NUMBER
- Q_M = 0.058 — AVERAGE DRY WEATHER FLOW, (MGD)
- P_F = 3.39 — FACTORED FLOW, (MGD)
- Q_P = 0.197 — PEAKING FACTOR
- PEAK WET WEATHER FLOW, (MGD)

Exhibit I - Scenario 2-LS
Sanitary Sewer Master Plan
PRSP + Future SA Offsite
Eastern Shed

Placer Ranch Specific Plan

Placer County
Scale 1"=300'

MacKAY & SOMPS
ENGINEERS PLANNERS SURVEYORS
1552 Eureka Road, Suite 100, Roseville, CA 95661 (916) 773-1189

California
September 1, 2017
Job No 1845S.C00