PLEASE HELP EMERGENCY SERVICES AND OTHER SERVICE PROVIDERS FIND YOU!

FOR YOUR SAFETY, please verify your address number with our records by checking the "situs address" shown on your property tax statement. Report problems to: CDRA Addressing, 3091 County Center Drive, Suite 120, Auburn, CA 95603 or call (530) 745-7530.

STREET SIGN DETAIL

- Signs shall be placed perpendicular to County roadway and visible from both directions of travel.
- Signs shall be 6" min. high reflective white letters (both sides) on reflective green background.
- Individual addresses shall be posted on a single pole at entrance to driveway and/or private roads.
- 4" x 4" Post, Redwood or treated wood conforming to sec. 56-4.02C of Caltrans Standard Specifications.

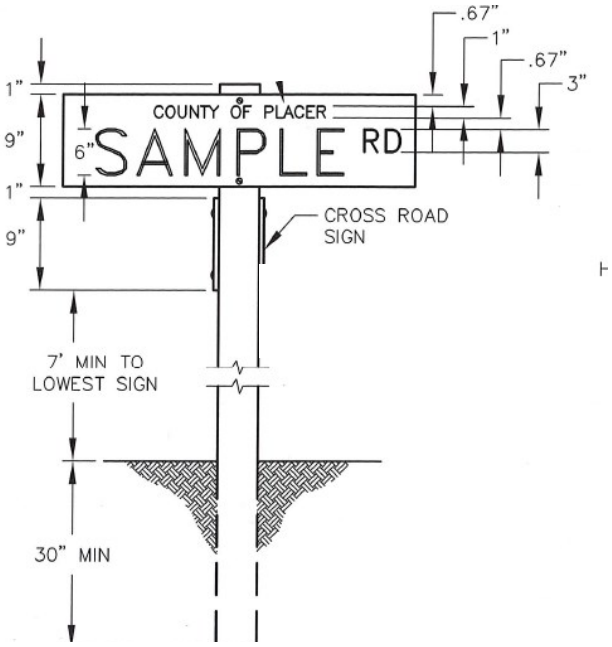

ADDRESS SIGNS

- Building addresses for single family dwellings within 100 feet of centerline of roadway shall be Arabic numerals or alphabetic letters, 4" min. letter height with 1/2" stroke, reflectorized and contrast with their background, or 5" min. letter height, 1/2" stroke and contrast with their background (Placer County Code 15.04.260)
- The address sign shall be located on the left side of the garage door between 4 and 6 feet above adjacent grade and visible from the roadway
- When garage door does not face street, building address sign shall be located on right front of building closest to street
- Signs shall have Arabic numerals or alphabetic letters, 4" min. letter height, 1/2" stroke reflectorized, and contrast with their background, or 5" height, 1/2" stroke and contrast with their background (both sides numbered) (Placer County Code 15.04.260)
- Signs shall be posted at driveway entrance, perpendicular to roadway and visible from both direction of roadway travel.
- Numbers shall not be spelled out. (Placer County Code 15.04.260)

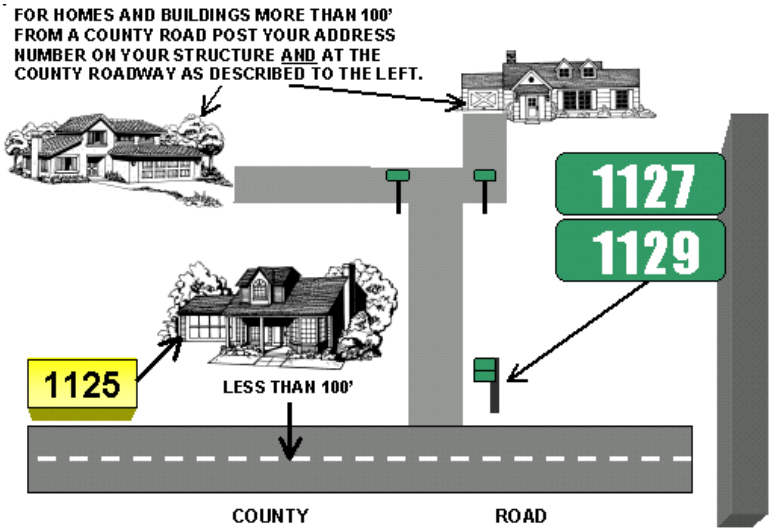

ADDRESS NUMBER SIGNS

- Signs shall have Arabic numerals or alphabetic letters, 4" min 1/2" stroke, reflectorized, or a 5" min. letter height, 1/2" stroke and contrast with their background (both sides numbered). (Placer County Code 15.04.260)
- Signs shall be posted at fork in driveway, perpendicular to roadway and visible from both directions of roadway travel

Please Note:

1) The County does not provide private road signs

2) All address numbers and road names are assigned by either your local City or Placer County

3) FOR YOUR SAFETY DO NOT post unauthorized road names on signs or use addresses not issued by your local City or Placer County authority.

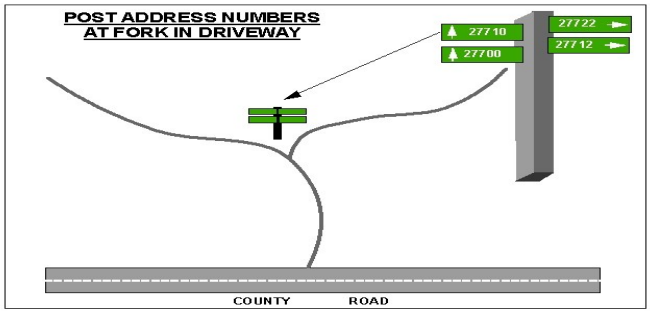

Placer County C.D.R.A.
Addressing Department
3091 County Center Drive, Suite 120
Auburn, CA 95603
(530)745-7530