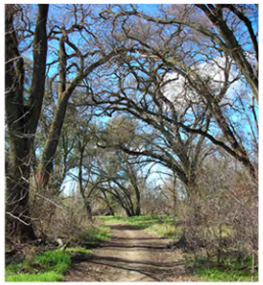

Riolo Vineyard

Design Guidelines Update - Marked Draft

August 2008
October 2014

This Page Intentionally Left Blank

ACKNOWLEDGEMENTS

Placer County Board of Supervisors
Jack Duran, District 1
Robert M. Weygandt, District 2
Jim Holmes, District 3
Kirk Uhler, District 4
Jennifer Montgomery, District 5

Placer County Planning Commission
Richard Roccucci, District 1
Kenneth Denio, District 2
Richard Johnson, District 3
Jeffery Moss, District 4
Miner Gray III, District 5
Larry Sevison, At Large
Wayne Nader, At Large

Placer County Community Development Resource Agency (CDRA) Director
Michael Johnson

Project Proponent
HBT of Riolo Vineyards, LLC.
11060 White Rock Road Ste. 150
Rancho Cordova, CA 95670

Project Planner
RCH Group
11060 White Rock Road Ste. 150-A
Rancho Cordova, CA 95670

This Page Intentionally Left Blank

TABLE OF CONTENTS

1. INTRODUCTION

1.1 Design Concept
1.2 Design Review Process

2. RESIDENTIAL DESIGN GUIDELINES

2.1 General Residential Design
2.2 Agriculture-10 (AG-10)
2.3 Rural Residential (RR)
2.4 Estate Residential (ES)
2.5 Low Density Residential (LDR)
2.6 Medium Density Residential (MDR)
~~2.6 High Density Residential (HDR)~~
2.7 Gated Residential Developments

3. COMMERCIAL DESIGN GUIDELINES

3.1 Commercial (CO)

4. LANDSCAPE DESIGN GUIDELINES

4.1 General Landscape Design
4.2 Residential Landscape Design
4.3 Gateway Design
4.4 Streetscape Design
4.5 Landscape Palette
4.6 Plant Materials
4.7 Landscape Elements
4.8 Maintenance
4.9 Energy Conservation and Low-Impact Development

5. PARKS DESIGN GUIDELINES

5.1 General Park Compliance

6. APPENDIX

Recommended Plant List

LIST OF FIGURES

4.1 Gateway Locations
4.2 ~~Watt~~ Riolo Gateway Concept
~~4.3 PFE West Gateway Concept~~
~~4.4 PFE East Gateway Concept~~
~~4.5 Walerga Gateway Concept~~
4.3 Gateway Elements
4.4 Walls and Fencing
4.5 Walls and Fencing Concepts
4.6 Walls and Fencing Concepts
4.7 Walls and Fencing Concepts
4.8 Walls and Fencing Concepts
4.9 Walls and Fencing Concepts
4.10 Walls and Fencing Concepts
4.11 Walls and Fencing Concepts
4.12 Walls and Fencing Concepts
4.13 Walls and Fencing Concepts
4.14 Landscape Corridor Concepts
4.15 Landscape Corridor Concepts

This Page Intentionally Left Blank

1. Introduction

(This page intentionally left blank)

1.1 DESIGN CONCEPT

There are no major changes to the design concepts. The Southern European theme has been modified to the "West Placer" theme in order to better integrate the project with the surrounding neighborhood.

The most memorable communities are those with a strong and identifiable sense of place. Generally these neighborhoods are driven by a central design concept which is successfully carried through each of the various project components. Design guidelines identify the central concept and provide tools for its ultimate implementation.

The Riolo Vineyard community embraces a ~~Southern European~~ West Placer design theme derived from ~~grape growing~~ farming operations that historically occurred on the site. This concept has been carefully chosen because of its ability to harmoniously blend into the rural countryside while simultaneously establishing a unique community vision. When implemented, the combined elements of this guide will provide continuity within the Specific Plan Area and balance among its natural surroundings.

The ~~Southern European~~ West Placer theme will be characterized by architectural features such as wrought-iron detailing, crafted wood embellishments and traditional stonework. Attractive, pedestrian friendly streetscapes will meander through the neighborhoods and invite community interaction. Lush landscaping will further the theme by incorporating large shade trees, ~~abundant grapevines, and richly hued ornamentals~~, reminiscent of ~~a European villa~~ the West Placer community. These features will seamlessly merge with the natural surroundings and establish Riolo Vineyard as a distinguished and conscientiously designed community.

The design guidelines and thematic elements presented in this section address architecture and landscaping as they relate to the Riolo Vineyard Specific Plan Area. The intent of this document is not to mandate a single style, but to establish a design framework with a strong central theme that still permits opportunities for flexibility and creativity.

1.2 DESIGN REVIEW PROCESS

The Placer County Design/Site Review process ensures that the design of new construction within the Plan Area will not adversely affect the desirability of adjacent uses. All new development within the Plan Area will be subject to Design/Site Review in accordance with the procedures outlined in Section 17.52.070 of the Placer County Zoning Ordinance.

(This page intentionally left blank)

2. Residential Design Guidelines

(This page intentionally left blank)

2.1 GENERAL RESIDENTIAL DESIGN

General design for the Plan Area shall adhere to the ~~Southern European~~ West Placer theme. The following guidelines are intended to provide a general framework for design and not necessarily to mandate specific details. While these guidelines are not binding, an overall cohesiveness with the community theme shall be maintained. The County and RVARC will be open to considering innovative, alternative design concepts that reinforce the intent expressed herein. These guidelines shall be applied to all new construction within the Riolo Vineyard Specific Plan Area.

The following listings of appropriate and inappropriate materials were developed based upon the professional judgment and opinions of those involved in the development of these guidelines. The materials listed as "appropriate" have generally stood the test of time to have desirable aesthetic qualities, while those listed as "inappropriate" have failed to do so. Certain materials have been omitted because their success or failure has more to do with the overall design, rather than the materials themselves.

These listings are intended to provide general guidance, and are not intended to be exhaustive. Designers should not limit their material palette to the following selections. New materials and refined fabrication methods are continually being introduced and these innovations are encouraged.

Exterior Building Materials & Colors

Appropriate Primary Wall Surfaces

- Native stone veneer
- Cement plaster stucco
- Smooth and hand-troweled stucco
- Tile (used at base or for accent only)
- Rough, split-face masonry
- Wood siding/ shingles
- Cement/ fiber siding (6", 8", or 12" horizontal siding)
- Brick
- Corrugated metal/ fiber siding

Inappropriate Primary Wall Surfaces

- T-111 Siding
- Highly polished materials
- Mirror or heavily tinted glazing
- Spray-on or knock-down stucco

Appropriate Wall Articulation and Accents:

- Accent tile
- Stucco corbels (1), lintels (2), sills (3)
- Timber corbels (1), lintels (2), sills (3)
- Clay tile vents
- Wood vents
- Recessed niches
- Colonnades
- Wrought Iron
- Wood trellises/ shading devices

(1) A projection of one of a series of projections, each stepped progressively outward with increasing height, and usually projecting from a wall or chimney.
(2) A horizontal structural member (such as a beam) over an opening.
(3) A horizontal member at the bottom of the frame of a wood structure.

Appropriate Roofing Materials

- Dimensional asphalt / composite shingles
- Metal Roofing
- "Cool Roof" built-up roofing

Appropriate Exterior Colors

- Light, subtle, earth tones such as tan, beige, sand, and cream used in conjunction with bold, rich complementary accents.
- Simple color schemes involving a maximum of 3 colors are recommended.
- Brighter colors shall be used as accents.
- Clay colored roof tiles

Inappropriate Exterior Colors

- Bright colored and stark white walls are discouraged.
- Certain materials, such as stone and brick, have distinct coloring in their natural state and shall be thought of as an element of the color palette used. These materials shall not be painted.

Appropriate Architectural Elements

- Recessed entryways
- Side entry garages
- Arcaded wing walls
- Decorative vents
- Decorative tiles
- Articulated roof forms
- Open gable roofs
- Courtyards
- Ornamental iron embellishments
- Stacked or cut stone
- Round or square towers
- Verandas
- Awnings

Appropriate Landscape Elements

- Italian Cypress Trees (or similar)
- Olive Trees (or similar)
- Manicured (formal looking) shrubs and plants
- Trellis'
- Stacked or cut stone
- Natural boulders
- Wine barrel planters
- Large pots for planters

2.2 AGRICULTURE-10 (AG-10)

Riolo Vineyard's Agriculture-10 parcels will embrace the project's ~~Southern European~~ West Placer character through the incorporation of ~~Spanish, Italian, and southern French~~ styles from the surrounding areas of Lincoln, Rocklin and Roseville. These design features include architectural and landscape elements listed below.

Site Design

1. Residential units shall be constructed above the proposed 100 year floodplain elevation.
2. Garages should be located toward the rear or side of the home and should not be visible from public view to the extent possible.
3. The property or any portion thereof should not be used as a parking lot, exterior storage area, or dump site.
4. New electrical, telephone, cable television, mechanical equipment and other distribution lines should be placed underground.
5. Architectural planning and design should take advantage of energy efficiency, e.g. natural heating and/ or cooling, sun, and wind exposure, and solar energy opportunities.
6. Solid fencing and chain link along lot lines is discouraged. Where fences are necessary (to retain animals, etc.), materials of minimal visual impact should be used, such as welded wire, four rail white vinyl or split-rail.

Building Design

1. Ag-10 residential structures are subject to review by the Placer County Design/RVDRC/Site Review Committee prior to issuance of a building permit.
2. Structures should include elements from the “Appropriate Architectural Elements” list described herein.
3. Roof levels and ground planes should be varied to break up the mass and bulk of buildings.
4. Alternative garage loading configurations are encouraged (i.e., side loading garages, detached garages, etc.).
5. Utility and mechanical equipment should be screened from view. Roof mounted air conditioners, coolers, or antennas are not allowed. Small satellite dishes are allowed.
6. The size, scale, proportion, color, placement and detailing of architectural features should carefully be considered to compliment the overall massing and scale of the building.
7. Landscaping, lighting, fencing, and signage should be complimentary, creating and maintaining neighborhood identity.
8. Flashing details (roof gutters, down spouts and vents) should be designed to compliment the building’s overall design, including materials and colors.
9. Each home should have a recognizable base, body, roof line, and entry way.

Ancillary Building Design

1. Ag-10 ancillary structures shall be subject to Placer County Design/Site review prior to issuance of a building permit.
2. With the exception of barns, the architectural style, colors, and materials used on ancillary buildings should compliment, or be consistent with, the primary residence.
3. Structures should include elements from the “Appropriate Architectural Elements” list described herein.
4. Ancillary structures should not be located in front of the primary residence.
5. Ancillary structures that include residential quarters shall be located above the proposed 100 year floodplain elevation.
6. Non-residential structures shall be located outside of the 100-year floodplain, unless findings can be made that no alternative location on the parcel is feasible and that the structure is

elevated, impermeable to floodwaters or designed to allow floodwaters to pass through unimpeded, consistent with Section 15.52.170 of the Placer County Code.

2.3 RURAL RESIDENTIAL (RR)

Rural Residential (RR) neighborhoods will be characterized by detached, single-family homes. New residential units will embrace the project's ~~Southern European~~ West Placer character through the incorporation of ~~Spanish, Italian, and southern French~~ the surrounding rustic and rural styles. The design guidelines listed below apply to new residential units and not structures or conditions under existing ownership. New rural residential units shall include architectural and landscape design elements listed below.

New Site Design

1. Residential units shall be constructed above the proposed 100 year floodplain elevation.
2. The property or any portion thereof should not be used as a parking lot, exterior storage area or dump site.
3. New electrical, telephone, cable television, mechanical equipment and other distribution lines should be placed underground.
4. Architectural planning and design of new construction should take advantage of energy efficiency, e.g. natural heating and/ or cooling, sun and wind exposure, and solar energy opportunities.
5. Solid fencing and chain link along lot lines is discouraged. Where fences are necessary (to retain animals, etc.), materials of minimal visual impact should be used, such as welded wire or split-rail.
6.

New Building Design

1. Rural Residential structures are subject to review by the Placer County Design/ RVDRC/Site Review Committee prior to issuance of a building permit.
2. New structures should include elements from the "Appropriate Architectural Elements" list described herein.
3. Roof levels and ground planes on new residential structures should be varied to break up the mass and bulk of buildings.
4. Alternative garage loading configurations are encouraged (i.e., side loading garages, detached garages, etc.).
5. Utility and mechanical equipment should be screened from view.
6. Lighting, fencing and signage should be considerate of adjacent homesites.

New Ancillary Building Design

1. Rural Residential ancillary structures are subject to review by the Placer County Design/RVDRC/Site Review Committee prior to issuance of a building permit.
2. With the exception of barns, the architectural style, colors, and materials used on ancillary buildings should compliment, or be consistent with, the primary residence.
3. Structures should include elements from the "Appropriate Architectural Elements" list described herein.
4. Ancillary structures should not be located in front of the primary residence.
5. Ancillary structures that include residential quarters shall be located above the proposed 100 year floodplain elevation.

2.4 ESTATE RESIDENTIAL (ES)

Estate Residential (ES) neighborhoods will be characterized by detached, single-family homes. Densities in these areas will range from 1-3 units per acre. The objective is to establish harmonious street design while providing diversity in home elevations and refraining from monotony.

Site Design

1. Open street patterns providing multiple points of ingress and egress are encouraged.
2. Open spaces and parks shall be located and designed as neighborhood focal points.
3. Isolated residential enclaves are discouraged.
4. Access from cul-de-sacs to open space or trail features is encouraged.
5. The design and character of all fencing and walls should be integrated into and compliment the project design while providing adequate privacy and security.
6. Variation in building placement and massing along the streetscape is encouraged.
7. New electrical, telephone, cable television, mechanical equipment and other distribution lines should be placed underground.
8. Each lot should include at least two street trees planted in the landscape strip between the back of curb and the face of sidewalk. Corner lots should include at least three street trees: one along the front yard and at least two along the side yard.
9. Homes should front or side onto their respective adjacent street.
10. Homes should front or side onto parks and recreational amenities where possible.

Building Design

1. Alternative garage loading configurations are encouraged (i.e., rear lot garages, side loading garages, recessed garages, detached garages, and single tandem garages).
2. The size, scale, proportion, color, placement and detailing of architectural features such as porches, balconies, chimneys, doors/windows and dormers should be carefully considered to compliment the overall massing and scale of the building.
3. Subtle variations in home design that create visual interest but do not create abrupt changes in the overall character of the neighborhood are encouraged. No two adjacent homes should be the same architectural elevation (for example, two identical adjacent house plans should have different architectural elevations. No more than two of the same house plans should be built adjacent).
4. Each street should include a minimum of three (3) different elevations and house plans.
5. Architecture, landscaping, lighting, fencing and signage should be complimentary and work together to create and maintain neighborhood identity.
6. Flashing details (roof gutters, down spouts and vents) should be designed to compliment the building's overall design, including materials and colors.
7. Utility and mechanical equipment should be screened from view. Roof mounted air conditioners, coolers, or antennas are not allowed. Small satellite dishes are allowed.
8. Architectural and streetscape variety is encouraged so that the Plan Area will appear to have developed over time.
9. Each home should have a recognizable base, body, roof line, and entryway.
10. Materials and articulation used on the front facade should be incorporated into the sides and rear facades where those elevations are visible from the street or other public space.
11. Architectural articulation such as awnings, moldings, pilasters, etc., are encouraged.
12. Architecture reflective of the West Placer style is encouraged in order to reflect the Plan Area's theme (See "Appropriate Architectural Elements" in section 2-1).

2.5 LOW DENSITY RESIDENTIAL (LDR)

Low Density Residential (LDR) neighborhoods will be characterized by detached, single-family homes. Densities in these areas will range from 1-5 units per acre. The objective is to establish harmonious street design while providing diversity in home elevations and refraining from monotony.

Site Design

1. Open street patterns providing multiple points of ingress and egress are encouraged.
2. Open spaces and parks shall be located and designed as neighborhood focal points.
3. Isolated residential enclaves are discouraged.
4. Access from cul-de-sacs to open space or trail features is encouraged.
5. The design and character of all fencing and walls should be integrated into and compliment the project design while providing adequate privacy and security.
6. Variation in building placement and massing along the streetscape is encouraged.
7. New electrical, telephone, cable television, mechanical equipment and other distribution lines should be placed underground.
8. Each lot should include at least one street tree planted in the landscape strip between the back of curb and the face of sidewalk. Corner lots should include at least three street trees: one along the front yard and at least two along the side yard.
9. Homes should front or side onto their respective adjacent street.
10. Homes should front or side onto parks~~, open space,~~ and recreational amenities where possible.

Building Design

1. Alternative garage loading configurations are encouraged (i.e., rear lot garages, side loading garages, recessed garages, detached garages, and single tandem garages).
2. The size, scale, proportion, color, placement and detailing of architectural features such as porches, balconies, chimneys, doors/windows and dormers should be carefully considered to compliment the overall massing and scale of the building.

3. Subtle variations in home design that create visual interest but do not create abrupt changes in the overall character of the neighborhood are encouraged. No two adjacent homes should be the same architectural elevation (for example, two identical adjacent house plans should have different architectural elevations. No more than two of the same house plans should be built adjacent).
4. Each street should include a minimum of three (3) different

elevations and house plans.

5. Architecture, landscaping, lighting, fencing and signage should be complimentary and work together to create and maintain neighborhood identity.
6. Flashing details (roof gutters, down spouts and vents) should be designed to compliment the building's overall design, including materials and colors.
7. Utility and mechanical equipment should be screened from view. Roof mounted air conditioners, coolers, or antennas are not allowed. Small satellite dishes are allowed.
8. Architectural and streetscape variety is encouraged so that the Plan Area will appear to have developed over time.
9. Each home should have a recognizable base, body, roof line, and entryway.
10. Materials and articulation used on the front facade should be incorporated into the sides and rear facades where those elevations are visible from the street or other public space.
11. Architectural articulation such as awnings, moldings, pilasters, etc., are encouraged.
12. Architecture reflective of the ~~Southern European~~ West Placer style is encouraged in order to reflect the Plan Area's theme (See "Appropriate Architectural Elements" in section 2-1).

2.6 MEDIUM DENSITY RESIDENTIAL (MDR)

Medium Density Residential (MDR) neighborhoods are intended to resemble Low Density Residential (LDR) neighborhoods on a smaller scale. Medium Density Residential neighborhoods may utilize a variety of housing types, such as attached townhomes and alley-loaded lots, in addition to single family detached homes. Typical densities range from 5-10 units per acre.

Site Design

1. Open street patterns providing multiple points of ingress and egress are encouraged.
2. Open spaces and parks should be located and designed as neighborhood focal points.
3. Isolated residential enclaves are discouraged.
4. Access from cul-de-sacs to open space or trail features is encouraged.
5. The design and character of all fencing and walls should be integrated into and compliment the project design while providing adequate privacy and security.
6. Variation in building placement and massing along the streetscape is encouraged.
7. All common areas, front yards and parking areas should be landscaped.
8. New electrical, telephone, cable television, mechanical equipment and other distribution lines should be placed underground.
9. Each lot should include at least one street tree planted in the landscape strip between back of curb and face of sidewalk. Corner lots should include at least two street trees: one along the front yard and at least one along the side yard.
10. Homes should front or side onto their respective adjacent street.
11. Homes are encouraged to side or front onto parks, open space, and recreational amenities where feasible.

Building Design

1. Alternative garage loading configurations are encouraged (i.e., rear lot garages, side loading garages, recessed garages, detached garages, and single tandem garages).
2. The size, scale, proportion, color, placement and detailing of architectural features such as porches, balconies, chimneys, doors/windows and dormers should be carefully considered to compliment the overall massing and scale of the building.

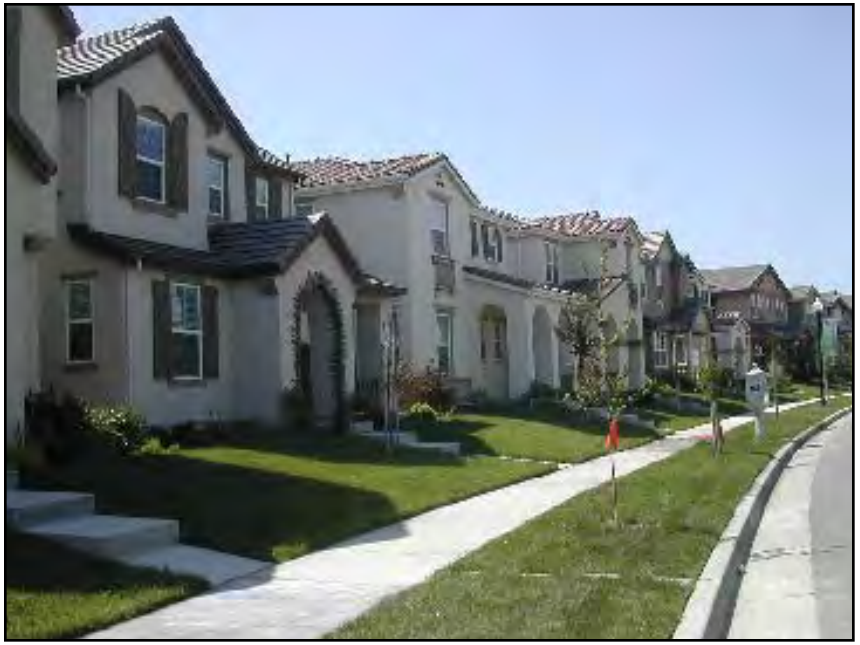

3. Subtle variations in home design that create visual interest but do not create abrupt changes in the overall character of the neighborhood are encouraged. No two adjacent homes should be the same architectural elevation (for example, two identical adjacent house plans should have different architectural elevations. No more than two of the same house plans should be built adjacent).
4. One and two story structures are encouraged for attached housing products to provide variety in the building mass.
5. Architecture, landscaping, lighting, fencing and any signage should be complimentary and work together to create and maintain neighborhood identity.
6. Utility and mechanical equipment should be screened from view. Roof mounted air conditioners, coolers, or antennas are not allowed. Small satellite dishes are allowed.
7. Flashing details (roof gutters, down spouts and vents) should be designed to compliment the building's overall design, including materials and colors.
8. Architectural and streetscape variety is encouraged so that the Plan Area will appear to have developed over time.
9. Each home should have a recognizable base, body, roof line and entryway.
10. Materials and articulation used on the front facade should be incorporated into the sides and rear facades where those elevations are visible from the street or other public space.
11. Architectural articulation such as awnings, moldings, pilasters, etc., are encouraged.
12. Architecture reflective of the ~~Southern European~~ West Placer style is encouraged in order to reflect the Plan Area's theme (See "Appropriate Architectural Elements" in section 2-1).

~~2.6 HIGH DENSITY RESIDENTIAL (HDR)~~
[HDR HAS BEEN DELETED]

~~High Density Residential (HDR) neighborhoods typically offer a range of affordable housing options by providing product types such as apartments, condominiums, and townhomes. Densities for this land use range from 10-23 units per acre. The objective is to provide high quality housing alternatives to the low and medium density product lines available in other parts of the Plan Area, while maintaining the Southern European West Placer theme.~~

~~Site Design~~

1. ~~The design of the HDR site should be compatible with its surroundings.~~
2. ~~Green space and common areas should be located and designed as neighborhood focal points.~~
3. ~~Site amenities should include generous landscaping and common areas for use by residents. All common areas, front yards, parking areas, and setbacks should be landscaped.~~
4. ~~Natural amenities such as views, mature trees, creeks, riparian corridors, and similar features unique to the site should be preserved where possible.~~
5. ~~Building and site design should incorporate porches, trellises, landscaping and other features where possible to help extend the living area outside and help soften the transition between the street and dwelling.~~
6. ~~The design and character of all fencing and walls should be integrated into and compliment the project design while providing adequate privacy and security.~~
7. ~~Seasonal shading from trees and shrubs should be considered when developing planting schemes for courtyards and streetscapes.~~
8. ~~Drought tolerant grasses should be used for lawn areas where possible.~~
9. ~~Native, drought tolerant plants should be used in conjunction with an efficient water system such as drip irrigation where possible.~~
10. ~~Long rows of parking spaces without landscaping should be avoided.~~
11. ~~One 15 gallon tree (or larger) should be provided per five parking spaces.~~
12. ~~For attached products, the principal vehicular access into a project should be through an entry drive rather than a parking drive.~~
13. ~~Parking and pedestrian circulation areas should be treated with landscaping and lighting.~~
14. ~~The site area adjacent to the street should not be dominated by parking.~~
15. ~~Perimeter landscaping should create an attractive and consistent appearance that blends with adjacent uses. Landscaped areas should be sufficiently large enough to create distinct spacial separations between buildings, parking and roadways.~~
16. ~~Subterranean or other types of parking design should be given consideration in multi-family developments.~~
17. ~~Parking areas should be designed to minimize potential car to pedestrian conflicts. Paseos, or similar treatments which separate cars from pedestrians, should be incorporated into the parking area design.~~
18. ~~Pedestrian linkages to adjacent uses should be provided.~~
19. ~~Rental/ sales offices located on-site should be centrally located and visible, with parking provided per Placer County standards.~~
20. ~~Private recreational facilities (pools, barbecues, tot lots) should be constructed as an amenity and shall be fenced for public safety.~~
21. ~~Trash enclosures should be located a minimum 25' from adjacent~~

~~residential property lines.~~

~~Building Design~~

1. ~~Multi-family units should be designed and detailed to correlate with the neighboring single-family detached and/or attached homes.~~
2. ~~Architectural features such as porches, balconies, chimneys, door placement, window proportions, dormers, wood detailing, siding and color scheme should be used to compliment the overall building design, site and neighborhood context.~~
3. ~~The architectural design of buildings and structures should be consistent with the Southern European West Placer theme of the Plan Area.~~
4. ~~Colors and finishes on exteriors of all elevations should be coordinated to provide design continuity. Colors should reflect the character and theme of the Plan Area.~~
5. ~~Building wall and roof planes should be varied and articulated into smaller modules and features to reduce the apparent bulk and mass of the structure.~~
6. ~~Roofs covering the entire building such as hips and gables are preferred over mansard roofs. Segmented pitched roofs should be applied at the building edge.~~
7. ~~Roofing colors should be soft earth tones to minimize reflective glare and visual impacts.~~
8. ~~Long, unbroken facades and box-like forms should be avoided.~~
9. ~~Interior stairways shielded from the elements should be utilized within multi-story buildings. Stairways on the exterior of the building should be constructed of stucco, plaster, or wood with accent trim of complementary colors. Thin-looking, open metal, prefabricated stairs are discouraged.~~
10. ~~To the extent possible, each unit should be individually recognizable. Methods to break up massing could include:~~
    - ~~Varied front setbacks within same structure.~~
    - ~~Staggered and articulated unit planes.~~
    - ~~Varied building orientations to avoid a "barracks" appearance.~~
13. ~~Courtyards should be utilized where possible to break up building mass and provide natural ventilation.~~
14. ~~Gutters and downspouts should be designed to integrate with the building facade. Where possible, drainage should be directed to permeable areas such as yards, open channels, or vegetated areas in order to minimize discharge into the stormdrain system.~~
15. ~~Garages for attached housing products should be creatively designed and located to minimize their visual presence. Garages and car ports should be accessible from parking courts, or internal parking lots only. No garages or parking stalls should be accessed directly from Watt Avenue or PFE Road.~~
16. ~~Garbage receptacles should be located within trash enclosure areas. Trash enclosures should be constructed of 6-foot high walls, consistent with the architectural style and materials of the residential buildings. Garbage containers should have closed covers.~~
17. ~~All utility and mechanical equipment should be screened from view. Roof mounted air conditioners, coolers or antennas are discouraged. Small satellite dishes are allowed.~~
18. ~~Common mailbox enclosures should be conveniently located and designed consistent with the form, materials, and colors to the surrounding buildings.~~

2.7 GATED RESIDENTIAL DEVELOPMENTS

Gated Low Density Residential (LDR) development is not encouraged within the Plan Area and will only be allowed at the discretion of the County. Gates may be incorporated into the design of Medium ~~and High~~ Density Residential developments within the Plan Area where appropriate to maintain security and limit public access to private areas. Fences with gates may be erected by the owners of the Ag-10 parcels along the exterior property line, or within the parcel.

When evaluating gated development proposals, the County will ensure that the development is well integrated into the fabric of the Specific Plan and that public pedestrian connections are provided to adjacent uses. The County will also ensure that the design and location of gates will provide safe and sufficient circulation. Gated communities must be designed to ensure that the overall circulation system within Riolo Vineyard is accommodated.

(This page intentionally left blank)

3. Commercial Design Guidelines

(This page intentionally left blank)

3.1 COMMERCIAL (CO)

The Commercial sites, located on the southeast and southwest corner of the Plan Area, ~~is~~ are intended to provide a mix of uses to serve the Plan Area and the surrounding community. ~~This~~ These sites will offer daily essentials such as restaurants and specialty shops. The commercial areas will abandon the conventional car-oriented "strip mall" design for a more walkable, pedestrian oriented one. Pedestrian-scaled buildings, courtyard designs, and lush landscaping will establish this center as a community destination.

Site Design

1. A mixture of neighborhood serving uses is encouraged.
2. New structures should be clustered to create plazas or pedestrian malls, and prevent long "barrack-like" rows of structures.
3. All sides of the building should be architecturally articulated and receive appropriate enhancement through landscape treatments and accent lighting.
4. Courtyards, covered walkways and outdoor gathering/ eating areas are encouraged to create a personal, intimate atmosphere.
5. Pedestrian walkways should be provided throughout the site.
6. Innovative use of lighting should be used to blend with the rural surroundings and minimize light and glare from footpaths, water elements, landscape features, buildings and other sources.
7. New development should express its own uniqueness of location, tenant, or structure, designed especially for the particular building site and not as a copy of a generic building type which might be used anywhere.
8. Trademark buildings dictated by chain or franchise businesses are discouraged where such buildings are not consistent with the overall character of the surrounding community.
9. Loading areas and trash enclosures should be thoughtfully located so as not to create undue distraction or nuisance to adjacent residential neighborhoods.
10. When residential properties are located directly adjacent to commercial properties, loading and delivery facilities and trash enclosures should be sufficiently screened to remove nuisance views, noises, and odors.
11. Entry driveways should be unloaded (parking prohibited) to eliminate conflicts between entry traffic and parking vehicles.
12. Driveway access from Walerga Road and Watt Ave should be limited to right-in / right-out movements. Driveway access from PFE Road (to the eastern site) should allow full access movements when paired with the existing Antelope Springs Church driveway on the south side of PFE.
13. Frontage improvements (southbound right turn lane on Walerga, northbound receiving lane on Watt and westbound receiving lane on PFE) should be provided with development of the site.
14. Parking areas should be located behind the building or behind a large landscaped buffer when placed adjacent to the street. Parking areas should be landscaped, lighted, and provide for pedestrian circulation.

15. Parking areas should be designed to minimize potential car to pedestrian conflicts. Paseos, or similar treatments which separate cars from pedestrians, should be incorporated into the parking area design.
16. Site design, building orientation and placement should carefully integrate pedestrian connections to adjoining residential neighborhoods in ways that maximize ease of access and ensure safety and security for both commercial and residential uses.
17. Due to the high visibility of corner properties, extra care should be given to building orientation and articulation. Significant buildings with prominent architectural features should be located near corners and intersections whenever possible.
18. Buildings should be oriented toward the street.
19. Plazas, landscaping, fountains, public art, textured pavement, and architectural features should be combined to create focal points and identity.
20. Perimeter landscaping should create an attractive and consistent appearance that blends with adjacent uses. Landscaped areas should be sufficiently large enough to create distinct spacial separations between buildings, parking, and roadways.
21. Landscaping should include 15 gallon, 24-inch, and 36-inch box trees; 5 and 15 gallon size shrubs; ground cover, and accent plantings.
22. Walls, signage, paving, and planting should be incorporated into a well designed entry into the project site to visually link the site entry to the buildings.
23. Accent planting should be used around entries and key activity hubs.
24. Planting and other screening techniques should be used to keep less desirable areas (trash enclosures, parking areas, storage areas, loading areas, public utilities, and mechanical equipment) from public view.
25. Trash enclosures should be located a minimum 25' from adjacent residential property lines.
26. Ornamental landscaping, open space areas, natural views, water features, architectural monuments, and enhanced paving should all be considered when designing project entries.
27. Lighting fixtures should be architecturally compatible with the main structure or theme of the building.
28. Spotlighting or glare from any lighting should be shielded from adjacent properties and directed at a specific object or target area. Exposed bulbs should not be used. Cut-off lighting is preferred.
29. Business Professional/Office uses should be limited to 25% of the gross leasable area.

Building Design

1. Buildings located on block corners should be more substantial and more ornate than mid-block buildings.
2. Where the side or rear of a building is visible from a public thoroughfare or public space, such elevations should be treated with the same materials, colors and architectural details as the primary frontage.
3. Design elements, reflective of the ~~Southern European~~ West Placer theme, should be used.
4. Building site plans should incorporate public spaces.
5. Elements such as arcades, arbors, and openings should be incorporated into the building design to break-up the expansive use of sheer walls.
6. Building scale should be reduced through the proper use of window patterns, structural bays, roof overhangs, siding, awnings, moldings, fixtures and other details.
7. Varied roof forms and building offsets should be used to soften the massing effect.
8. Roofing colors should be soft earth tones to minimize reflective glare and visual impacts.

9. All roof equipment should be screened from public view.
10. Service areas, loading bays and trash enclosures should be screened from public views by the use of walls and landscaping.
11. Large areas of intense light colors should be avoided. Subdued colors usually work best for overall building color while bright or accent colors are typically appropriate for trim, windows, doors, and key architectural elements.
12. Buildings should keep a balanced color palette between base colors and “brighter” or “darker” accent colors on each building.
13. Permanent shading devices that are aesthetically pleasing, such as awnings and canopies, should be incorporated in order to assist in cooling the building and patrons during summer months.
13. Gutters and downspouts should be decorative or designed to integrate with the building facade. Where possible, drainage should be directed to permeable areas such as yards, open channels, or vegetated areas in order to minimize discharge into the stormdrain system.
14. Common mailbox enclosures should be similarly designed in form, materials, and color to the surrounding buildings.
15. Mailboxes should be located away from the streetscape.

(This page intentionally left blank)

4. Landscape Design Guidelines

(This page intentionally left blank)

4.1 GENERAL LANDSCAPE DESIGN

To a large extent, the vision of the ~~Riolo Vineyard~~ community will be communicated through the landscape. Lush green spaces weave through the individual villages and unify the project beneath a common ~~Southern European~~ West Placer theme. This design concept is characterized by symmetrical spaces, formal courtyards, clean lines, manicured hedges, simple landscape elements, and plant materials that are generally drought resistant. Accents will emphasize the importance of the ~~vineyard~~ farm, and could include stacked or cut stone walls, fountains, reflecting pools, decorative ironwork, sculptural elements, trellis features, and large terra-cotta or wine barrel pots. Where feasible, grapevines and community gardens will be incorporated into the design of urban landscapes such as gateways, parks, and transitional areas in order to accentuate the ~~vineyard~~ farming lifestyle.

The following guidelines shall be used in order to implement the ~~Southern European~~ West Placer theme into the landscape design:\

Site Design

1. Landscape designs should embrace the overall ~~Southern European~~ West Placer theme and compliment the surrounding architectural styles.
2. Hardscapes, walls, fencing, accents, and other landscape materials should implement the ~~Southern European~~ West Placer theme and emphasize the ~~vineyard~~ farming lifestyle.
3. Neighborhood entries should be designed as focal points and introduce the theme of that particular village. Entry themes should be carried into the design of the streetscapes and common areas within each village.
4. Landscape corridors should be designed to buffer potential conflicts, enhance significant streetscapes, and encourage pedestrian use.
5. Lots adjacent to parks, open space, and landscape corridors should be designed to compliment those adjacent uses and provide a recognizable visual connection to them.
6. Open space landscaping should transition from formal residential designs to informal naturalistic ones as it progresses from the neighborhoods into the floodplain and out toward the Dry Creek riparian corridor.
7. Mitigation planting should be designed to blend with the surrounding natural environment. Long straight lines of trees should be avoided in favor of clustered grove or meandering swathe formations found in nature.
8. Park landscaping should address views to and from adjacent streets and residences.
9. Each residential lot should contain at least one 15-gallon tree from the County approved tree list.
10. Drought tolerant plant materials should be used where possible.
11. Efficient irrigation systems (drip, subsurface, low-flow, etc.) and other water conservation methods should be utilized where possible.
12. Sufficient landscaping should be used to screen unsightly areas, such as utility substations, pumps and irrigation equipment.

13. All landscaping should be properly installed and maintained.
14. Tree plantings should be outside public sewer easements. A minimum clearance of 10 feet should be provided between sewer services and trees.

4.2 RESIDENTIAL LANDSCAPE DESIGN

While the design guidelines for Riolo Vineyard are still applicable, the use of drought resistant plants is prudent and will be encouraged. A recommended plant list has been added to the chapter 5 appendix.

The primary objective for residential landscape design is to strengthen and validate the architecture. Within each individual lot, the planting design will support the architectural style of that particular home. Landscape design will aid in transitioning from the public realm (the street) to the private one (the home).

The exterior space of any home can be divided into three distinct zones, each requiring a slightly different treatment. These landscape zones are described below.

Front Yard

This area extends from the back of the sidewalk to the face of the house. Generally, plant materials will increase in height and mass from the street to the home in order to provide a transition from the ground plane to the height of the building. Planting design should emulate and support the lines and geometry found in the architecture. Designs should also address the historical context of that particular architectural style.

Side Yard

For interior lots, this area extends from the side property line to the side of the home. Planting schemes in this zone should provide screening for exterior living spaces and promote privacy. Special effort should be made to buffer views of mechanical equipment and utilities. Side yard planting should be coordinated with the adjacent lot whenever possible.

For corner lots, the side yard adjacent to the street generally consists of the area from the back of the sidewalk to the side of the home, including any sideyard fencing. Landscape treatments in these locations should be carefully designed to buffer potential conflicts between public and private space. Planting height and mass must transition much more quickly here, and screening this space is a critical component in maintaining privacy.

Rear Yard

This area generally extends from the rear wall of the home to the rear property line. Landscape designs for lots with view fences should be sensitive to views both to and from the residence. Planting schemes in this zone should provide screening for exterior living spaces and promote privacy. Special effort should be made to incorporate the design and materials from the front and side yards into the design of the rear yard.

4.3 GATEWAY DESIGN

Gateways announce the character and identity of individual neighborhoods and accentuate community theme. The composition of a gateway scene acts as a visual anchor and reinforces the ~~Southern European~~ West Placer character. Widened pavement sections, landscaped medians, and traffic circles emphasize these focal points. Entry treatments may include stonework, trellises, walls, pilasters, monumentation, special paving and other architectural treatments. Lush landscaping at these locations serves as a backdrop for signage and monumentation. Although individual gateway designs may vary,

common ~~Southern European~~ West Placer style elements will connect them all.

Gateway locations and design concepts are shown on Figures 4.1-4.6.

Gateway Policies

1. Gateways should be prominently marked with signage, accent paving, lighting, landscaping, accent trees and monument features.
2. Monuments and signage should reflect the ~~Southern European~~ West Placer theme. The design of gateways should be coordinated with any adjoining lighting, landscaping, walls or fencing elements.
3. Commercial entries should be designed with signage, walls, landscaping and accent features consistent and compatible with the rest of the site.
4. Landscaped islands and traffic circles may be utilized to emphasize certain roads.
5. All sign, monument, and trellis/archway locations shall be approved by the Department of Public Works prior to Improvement Plan and/or Encroachment Permit approval.

Gateway Scene Elements

A. Rows of Vines *
B. ~~Italian Cypress Trees *~~ Red Maple*
C. Rose Bushes *
D. ~~Olive Trees *~~ Fruit Trees*
E. Oak Trees *
F. Pedestrian/Bike Access
G. Rail/Split Rail Fence
H. Stone Accents
I. Neighborhood Signage
J. Accent Planters (i.e. wine barrel planter)

* Similar landscape material may be substituted. The intent is for the landscape palette to be reflective of the ~~Southern European countryside~~ West Placer Agrarian community.

4.4 STREETSCAPE DESIGN

Quality streetscape design is an essential component in the creation of a community with strong vision. This public space gives the first and last impressions, greeting visitors as they arrive and providing a send-off as they depart. A primary goal of these guidelines is to establish the streetscape as an attractive public space, not just for residents of Riolo Vineyard, but also the surrounding community.

Planting design for all streetscapes within Riolo Vineyard will follow a recognizable pattern, unifying each village with a predictable and consistent rhythm. Street trees will perform several functions in the residential landscape: providing shade, creating visual interest, and unifying the community theme. Trees and shrubs shall be adequately spaced to produce healthy and mature growth. Landscape designs for all streetscapes shall adhere to Placer County's minimum vehicular sight distance requirements by using low growing vegetation.

Streetscape design concepts are shown on Figures 4.17-4.18.

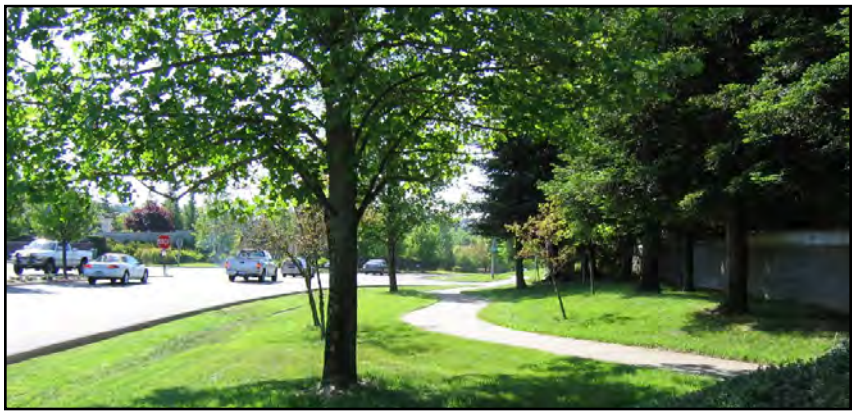

4.5 LANDSCAPE PALETTE

Each of the following elements should be considered potential tools for use in implementing the ~~Southern European~~ West Placer theme. These

landscape elements are detailed below.

Specimen Trees

These trees are characteristically large and bold, and can change during the seasons through the growth of flowers and/or fruit, or alterations in leaf color. These elements typically become focal points in the landscape.

Accent Trees

These trees provide showy flower and/or leaf color, most often with seasonal interest and a gardenlike appearance. Accent trees catch attention and emphasize the significance of a particular space.

Street Trees

Street trees reflect the unique character of an individual neighborhood or street. These trees, when planted at regular intervals, create a consistent canopy along the travel way and have the ability to thrive in a neighborhood environment. Street tree planting shall be modified to incorporate existing trees and native oaks, when possible. Species selection should reflect the environmental characteristics of the region, and low maintenance and drought-tolerant species are recommended.

Accent Shrubs

Accent shrubs normally provide seasonal variety. These elements primarily function as support for architectural elements, entries, gateways, or other spaces that require emphasis.

Groundcovers

This important group of plants usually hugs the ground and grows in a spreading fashion. The function of this element is to cover the ground, discourage weed growth, and stabilize slopes. In addition, it can add seasonal interest with flower and foliage color.

Turf

Turf provides one of the most significant immediate impacts to the landscape. The use of sod instantly creates a mature lawn and, when used in

sufficient quantities, covers the ground plane in a lush green carpet that forms a base for additional planting.

Screens

The function of this element is to block views of private spaces or areas that are visually unappealing. These would include storage areas, trash enclosures, transformers, generators, and other similar elements. Plant materials that provide screening typically have thick or dense foliage which remains throughout the season. Above ground utilities which are installed as a part of the project shall be screened by substantial landscaping and/or architectural barriers.

4.6 PLANT MATERIALS

Plants used in conformance with the provisions of this document shall be of good quality and capable of withstanding the extremes of individual site microclimates. This is particularly important in areas of the site which might produce excessive shade and sun conditions.

Refer to Appendix A for the recommended plant list.

Overall growth rate, height, width, and form must be well considered when locating plants. The size and density of the plant materials, both at the time of planting and at maturity, are additional criteria which should be considered by the RVDRC when approving plans. The use of drought-tolerant plants is preferred when such species are appropriate to the design.

4.7 LANDSCAPE ELEMENTS

Each of the following landscape elements work together in implementing the ~~Southern European~~ West Placer theme. These elements are detailed below.

Walls and Fencing

Walls and fences are essential design elements within the Riolo Vineyard community. In addition to their aesthetic value, these features provide safety, security, privacy, property definition, livestock containment and noise attenuation. They can also establish appropriate buffers between uses and aid in eliminating potential conflicts. Walls and fences are highly visible community design elements and shall be implemented with careful consideration given to quality and character. A creative and controlled approach to wall and fence design that is consistent with the ~~Southern European~~ West Placer theme has been established in the Plan Area. Walls and fencing throughout the community have been comprehensively designed as a coordinated system. Similar wall and fencing types that are consistent with the ~~Southern European~~ West Placer theme of the Plan Area may be permitted upon approval by the Placer County Design Review Advisory Committee. Wall and fencing designs for non-PFE Investors properties shall also be subject to the above review and approval at the time site plans are submitted.

Wall and Fencing design concepts are shown on Figures 4.7-4.16.

Walls and Fencing Policies

1. All wall and fence designs should allow for visual surveillance of parks, open space, landscape corridors and pedestrian pathways.
2. All wall and fence designs should reinforce, and coordinate with, the character of the Plan Area and its surroundings.
3. Walls and fencing should incorporate materials, colors and shapes that reflect the common ~~Southern European~~ West Placer theme.
4. Community walls should not exceed 500’ without a break, a

horizontal step, or some other significant variation in massing.

5. Fencing within the 100 year floodplain shall be three or four rail wood or vinyl or other open type fencing which permits the flow of floodwaters. In AG-10 areas not affected by the floodplain, welded wire against three or four rail fencing is acceptable.
6. Open neighborhood designs are encouraged, with walls and fencing designed to be sensitive to this overall policy.
7. The visual prominence of walls and fencing should be reduced through the use of landscaping.
8. Walls and fencing should be constructed of quality materials, with low maintenance requirements and long-term durability.
9. Walls and fencing should coordinate with adjoining signs and monuments, where applicable.
10. Walls should not exceed six feet, measured from the highest graded side.

Signage

Signs and monuments provide a cohesive neighborhood character and identity as well as improving circulation efficiency. Proper design and application of signs and monuments orient residents and visitors within the neighborhood and announce important community features. All signs and monuments within the Plan Area shall reflect the quality and theme of the Riolo Vineyard community.

Signage Policies

1. All signage should conform to the Placer County Sign Ordinance.
2. All elements should reinforce and coordinate with the character of the Plan Area and its surroundings.
3. Signs and monuments should incorporate materials, colors and shapes that reflect the common ~~Southern European~~ West Placer theme.
4. Signs and monuments should be constructed of quality materials, with low maintenance requirements and long-term durability.
5. Sign and monument design should coordinate with adjoining walls and fences, where applicable.
6. Signs and monuments should be clear, concise and informative.
7. Signs and monuments should be used to identify uses such as neighborhoods, parks and pathways.
8. Street signs and directional signs within the road right-of-way shall conform to Manual on Uniform Traffic Control Devices (MUTCD) standards.

Lighting

Effective lighting provides illumination for vehicles and pedestrians, enhancing architectural forms and emphasizing landscape features. In order to uniformly incorporate the ~~Southern European~~ West Placer theme, ornamental lighting fixtures are encouraged. Maintenance on electrical costs of these standards shall be funded by the HOA. These guidelines apply to lighting within the public right-of-way and common open space areas.

Lighting Policies

1. Street lighting standards should be spaced according to County requirements.
2. Lighting should be provided to ensure a safe environment, but shall not result in excessive light or glare.
3. Lighting should be sensitive to adjacent land uses and viewsheds. Fixtures that provide down-lighting should be shielded from adjacent uses where feasible.

4.8 MAINTENANCE

All landscaping shall be continually maintained in a healthy and weed-free condition. Where poor soil conditions occur, extra care should be given to prepare and apply soil amendments prior to planting. Individual property owners shall be responsible for the maintenance of street trees and landscaped areas from the curbline of the adjacent street(s). All landscaping materials shall be maintained in good condition

so as to present a healthy, neat and orderly appearance. Plant materials not meeting these criteria shall be removed and replaced in a timely manner. Irrigation equipment shall be kept in good working order at all times.

4.9 ENERGY CONSERVATION AND LOW-IMPACT DEVELOPMENT

Landscape design shall consider a number of energy conservation and low-impact development (LID) techniques. Seasonal sun exposure and shading patterns shall be identified and all design shall consider these elements in relation to structures and hardscapes. In addition, landscape designs shall incorporate LID techniques, which reduce the amount of impervious area and naturally treat stormwater by directing it through a series of vegetated areas. The Riolo Vineyard Specific Plan shall incorporate and implement the following measures, or equally effective measures, to reduce energy consumption.

Energy Conservation Policies

1. Install low-NOx hot water heaters per Placer County Air Pollution Control District (PCAPCD) Rule 246.
2. Encourage landscape maintenance companies to use battery powered or electric equipment for nonresidential maintenance activities, where feasible.
3. Provide natural gas lines or electrical outlets to all backyards to encourage the use of natural gas or electric barbecues and electric lawn equipment.
4. Install Class I bicycle lockers along with bike racks in commercial spaces.
5. Encourage landscaping with drought-resistant species, and the use of groundcovers rather than pavement to reduce heat reflection.
6. Include Energy Star efficient appliances, such as dishwashers, refrigerators, and clothes washers.
7. Include energy-efficient SunCoat Max window glazings, which have a solar heat gain of 0.27.
8. Include high-efficiency heating and efficient ventilation methods on all new residential units. Furnaces to be low-NOx w/ an AFUE of 80%.
9. Include high efficiency water heaters. The external insulation used should have an R-Value of 16 and an efficiency value of .62.
10. Include high efficiency insulation with the following ratings – Ceilings: R-38, 2x6 Walls, 2x4 Walls: R-19 and Ducts: R-6.4.

FIGURE 4.1 GATEWAY LOCATIONS
PREVIOUSLY APPROVED

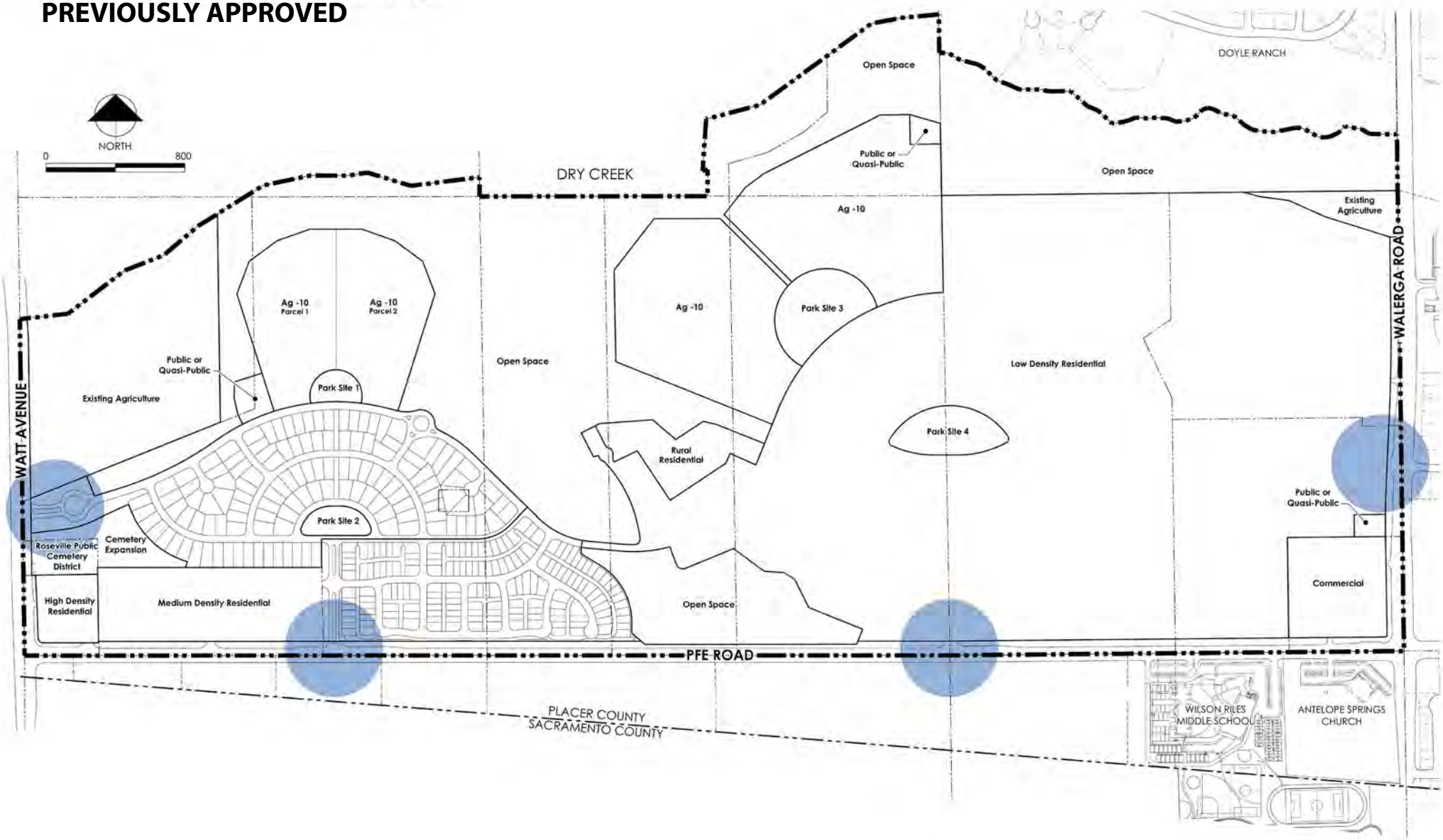

FIGURE 4.1 GATEWAY LOCATIONS
AMENDED

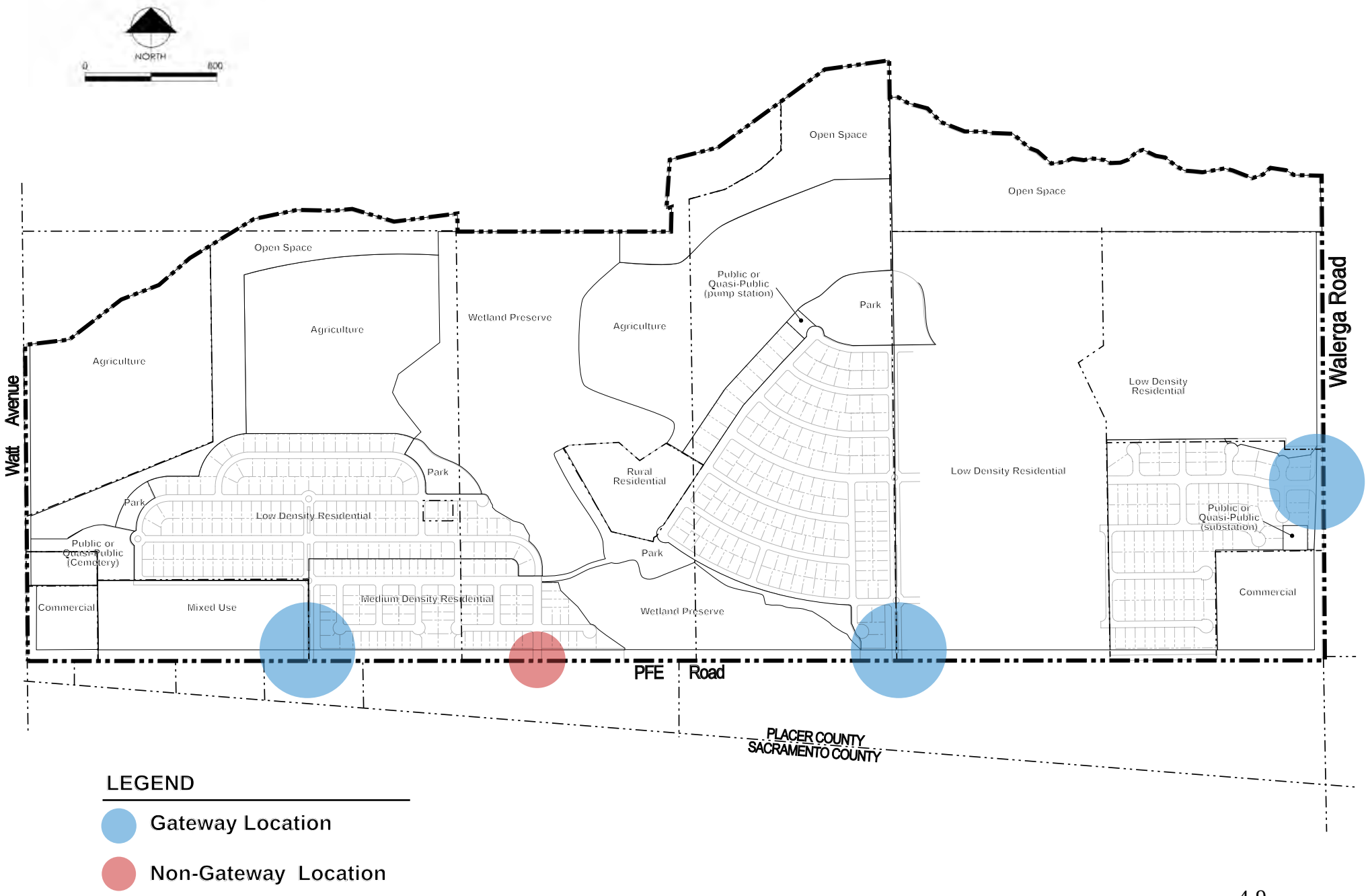

LEGEND

Gateway Location

Non-Gateway Location

FIGURE 4.2 WATT GATEWAY CONCEPT

THIS DETAIL HAS BEEN REMOVED

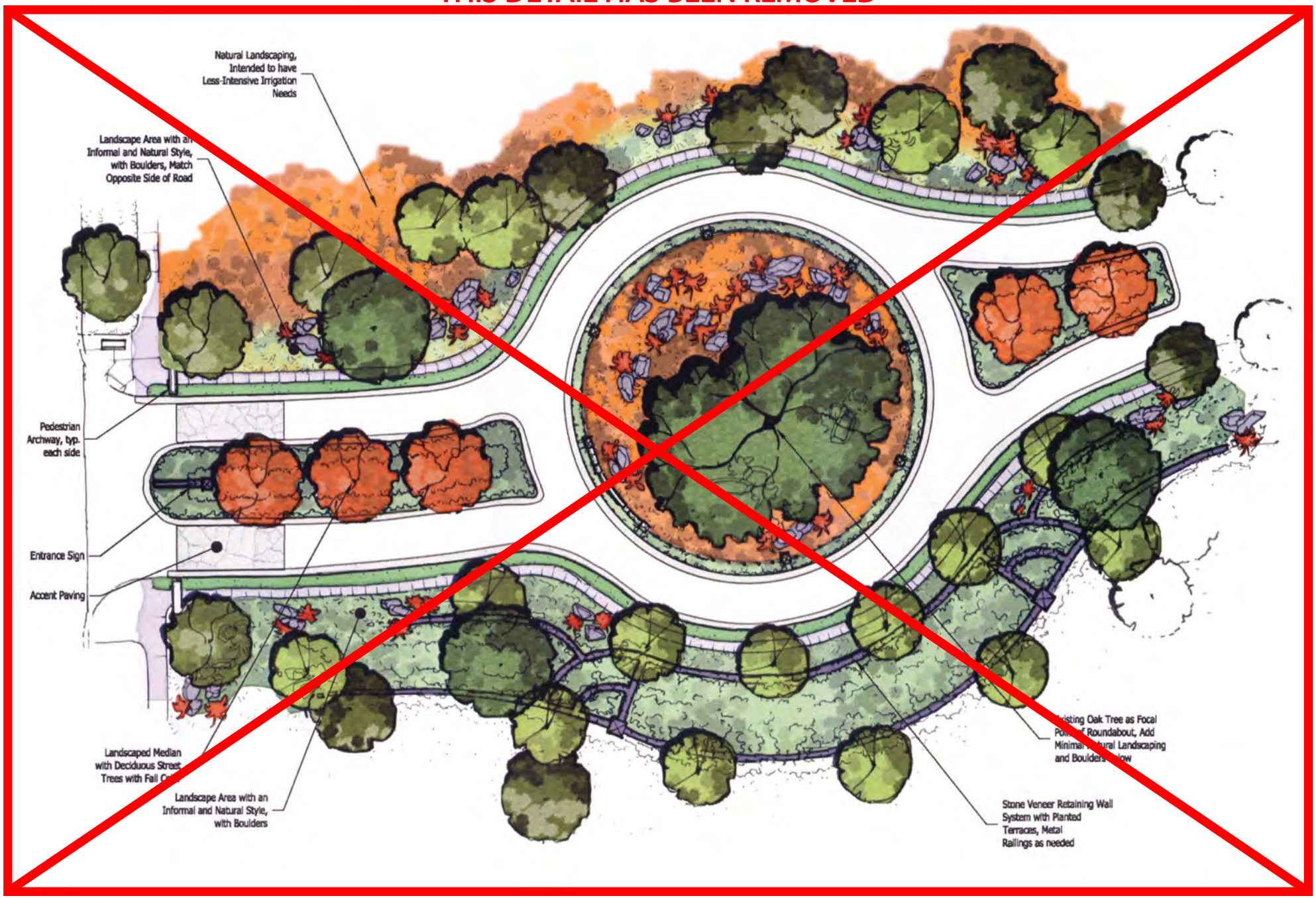

Source: RRM Design Group

FIGURE 4.5 WALERGA GATEWAY CONCEPT

THIS DETAIL HAS BEEN REMOVED

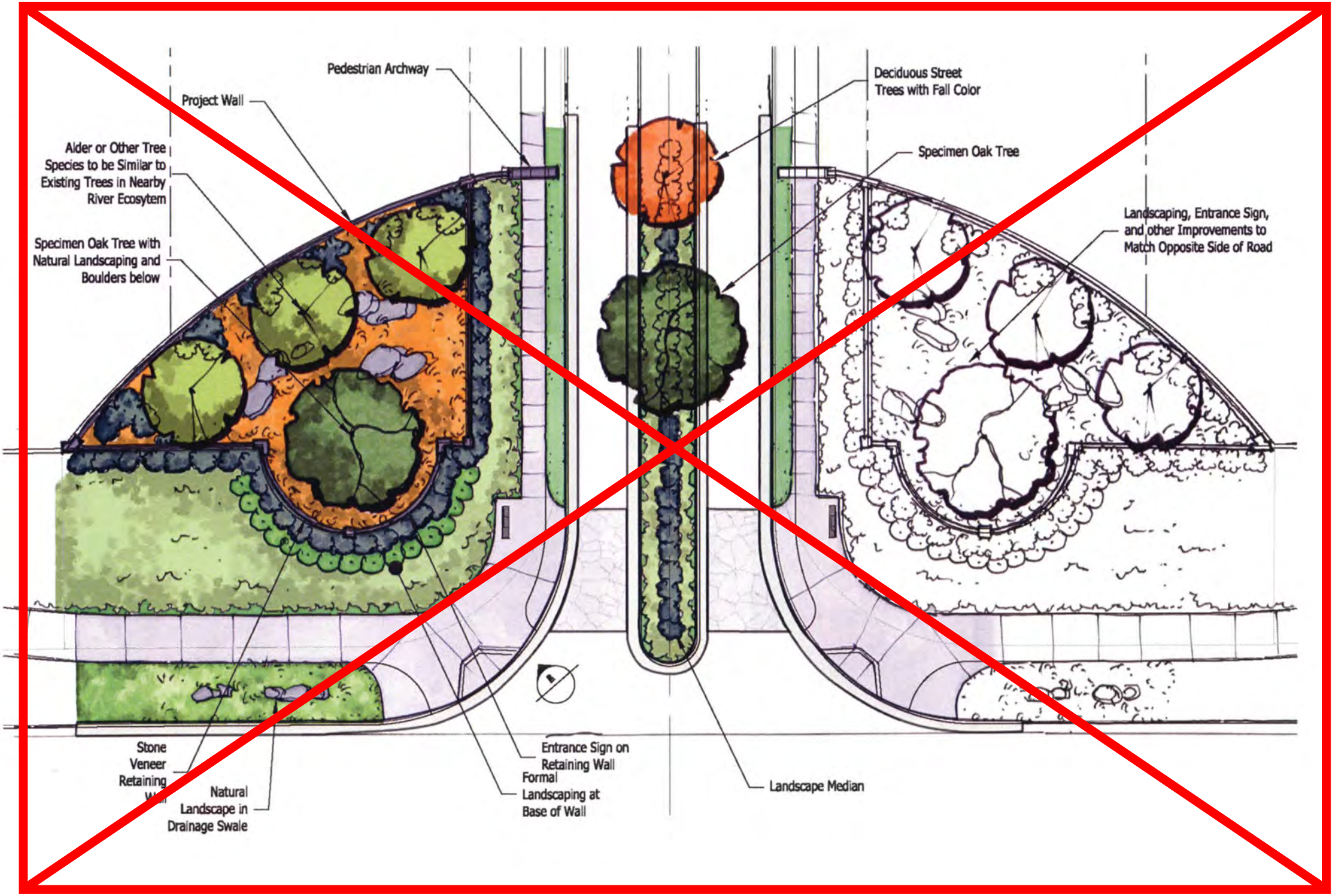

FIGURE 4.4 PFE EAST GATEWAY CONCEPT

THIS DETAIL HAS BEEN REMOVED

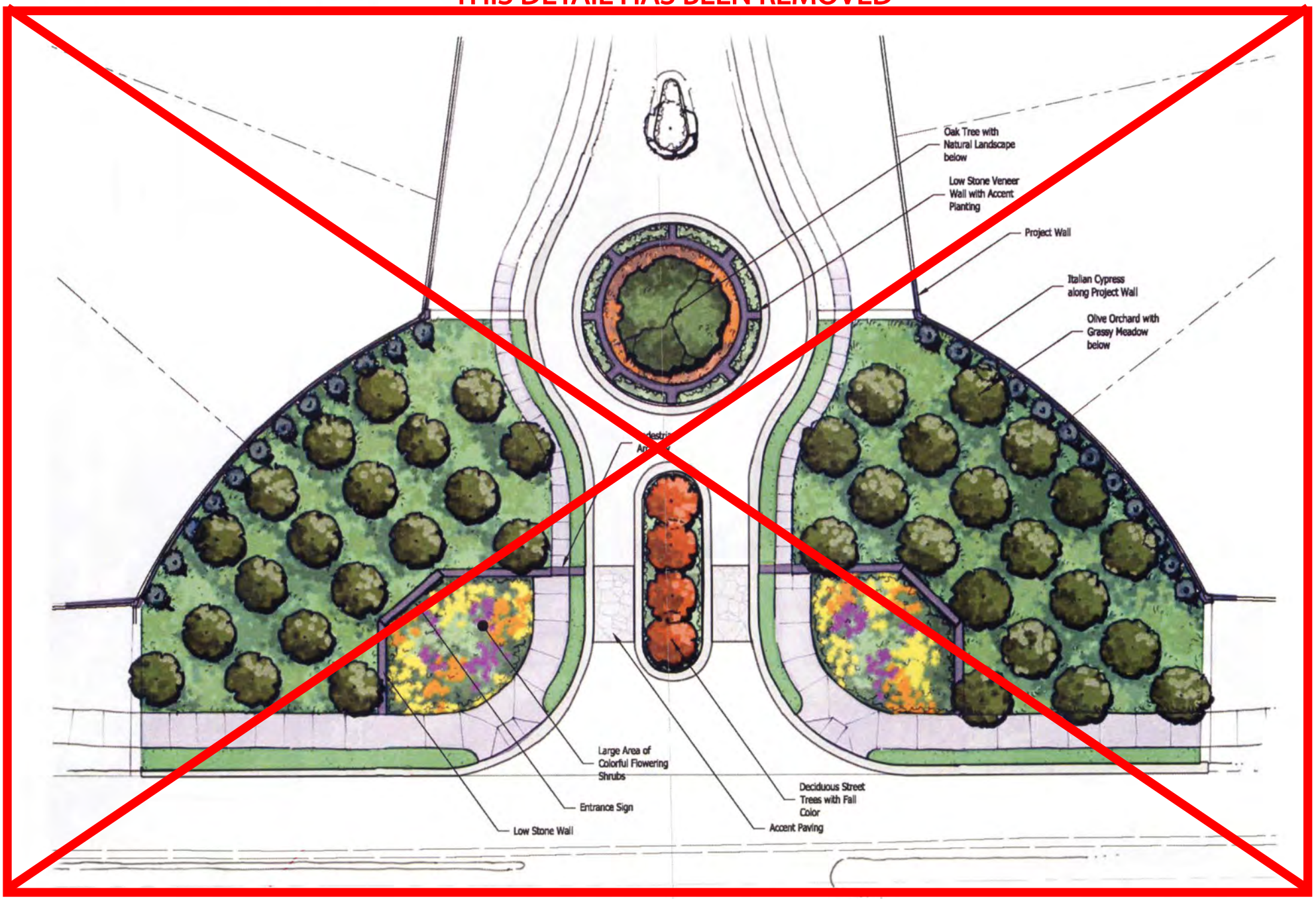

FIGURE 4.2 ~~PFE WEST GATEWAY CONCEPT~~ RIOLO GATEWAY CONCEPT

All Riolo Vineyard gateway concepts have been simplified to cohere to this concept. The elements of this are to remain the same, however dimensions and locations of concept elements may change to adapt to the new Site Plan.

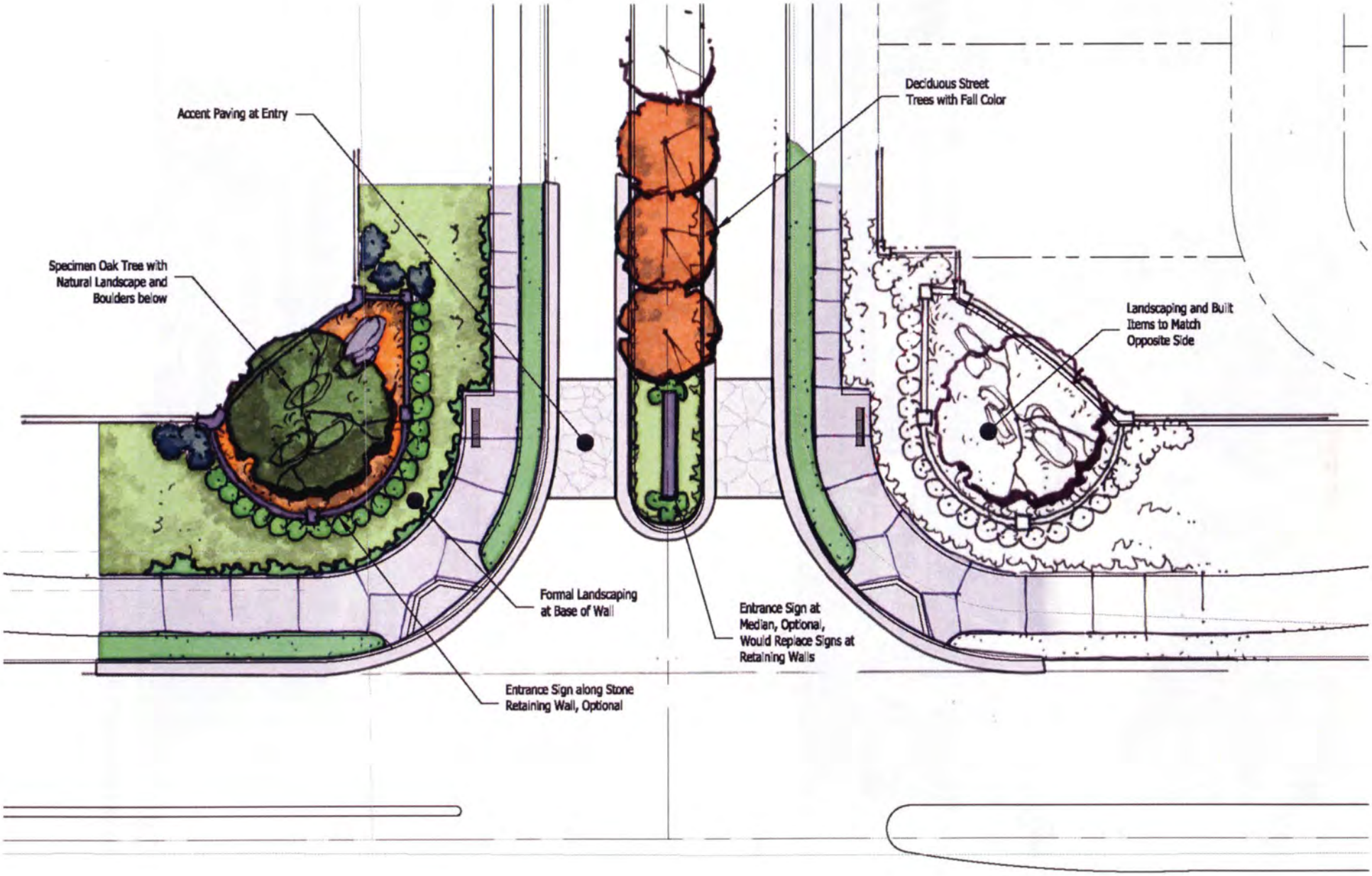

This Page Intentionally Left Blank

FIGURE 4.3 GATEWAY ELEMENTS

All elements of the gateway concepts are to remain the same.

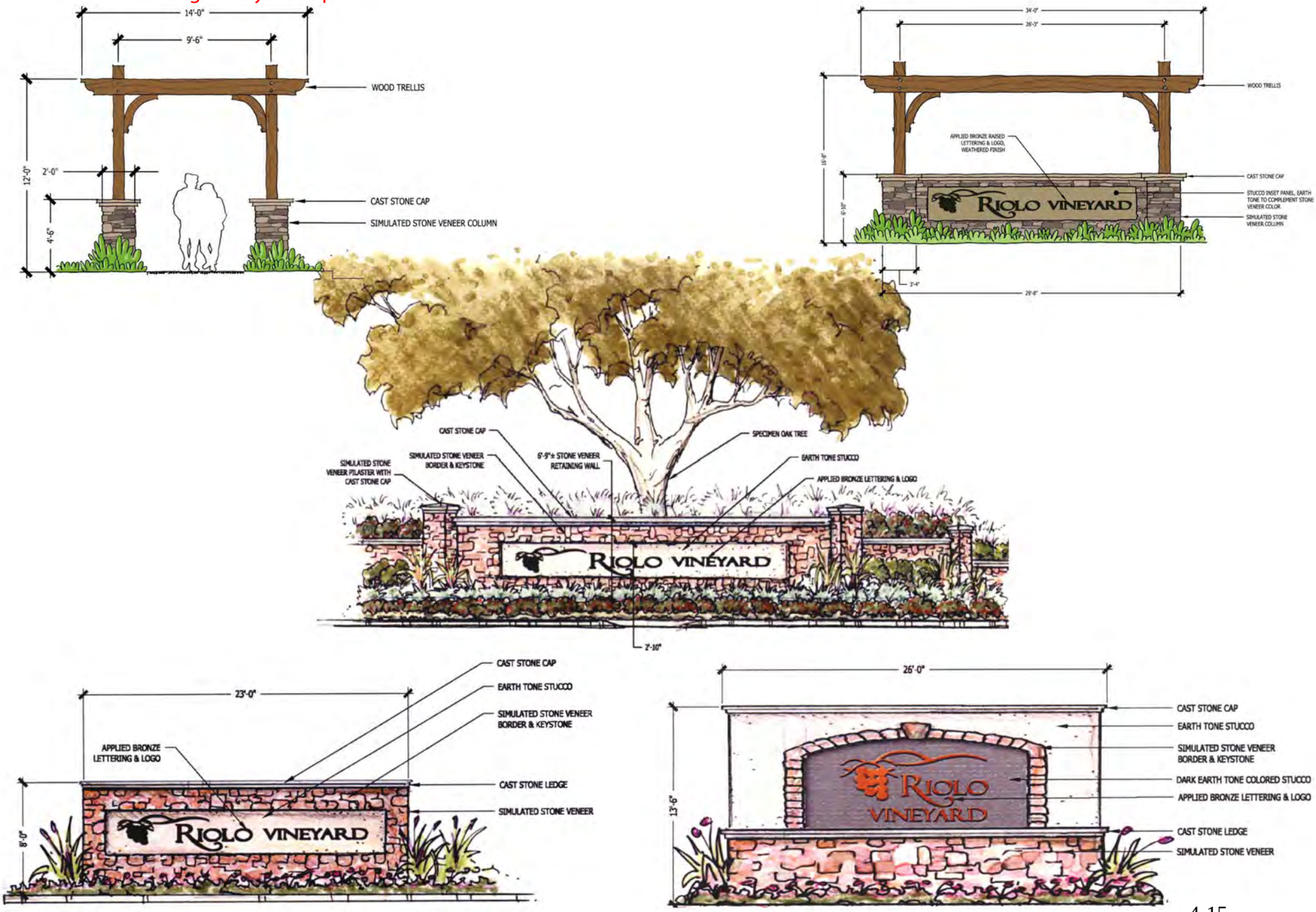

FIGURE 4.7 WALLS AND FENCING

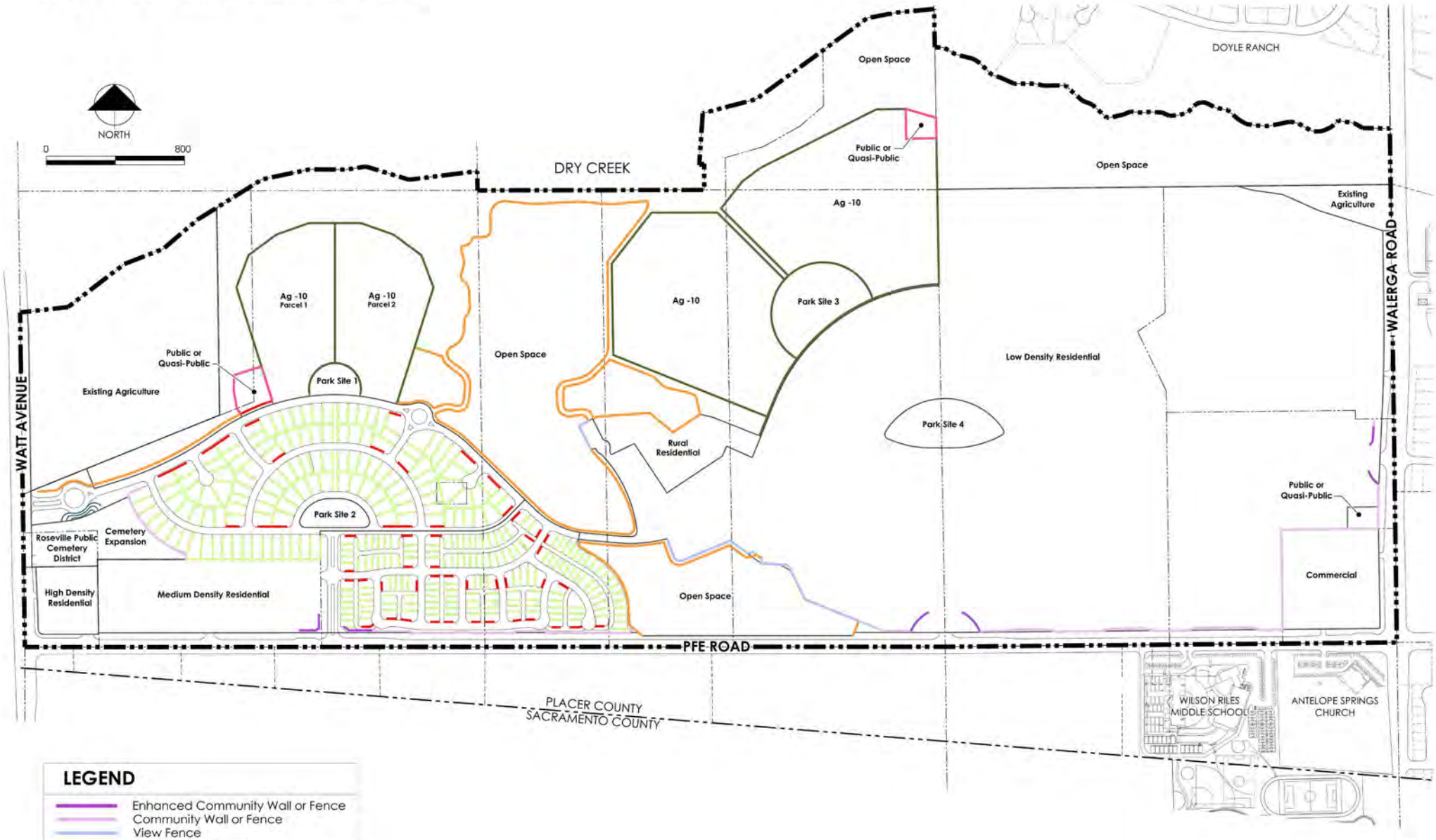

LEGEND

- Enhanced Community Wall or Fence
- Community Wall or Fence
- View Fence
- Security View Fence
- Enhanced Fence
- Good Neighbor Fence
- Agriculture Fence
- Open Space Barrier
- Retaining Wall

Note:
Wall and fence locations may change subject to acoustical and other studies. Additional open space barrier fencing may be required adjacent to mitigation areas and other sensitive habitats. Retaining walls on individual lots not shown.

FIGURE 4.4 WALLS AND FENCING
AMENDED

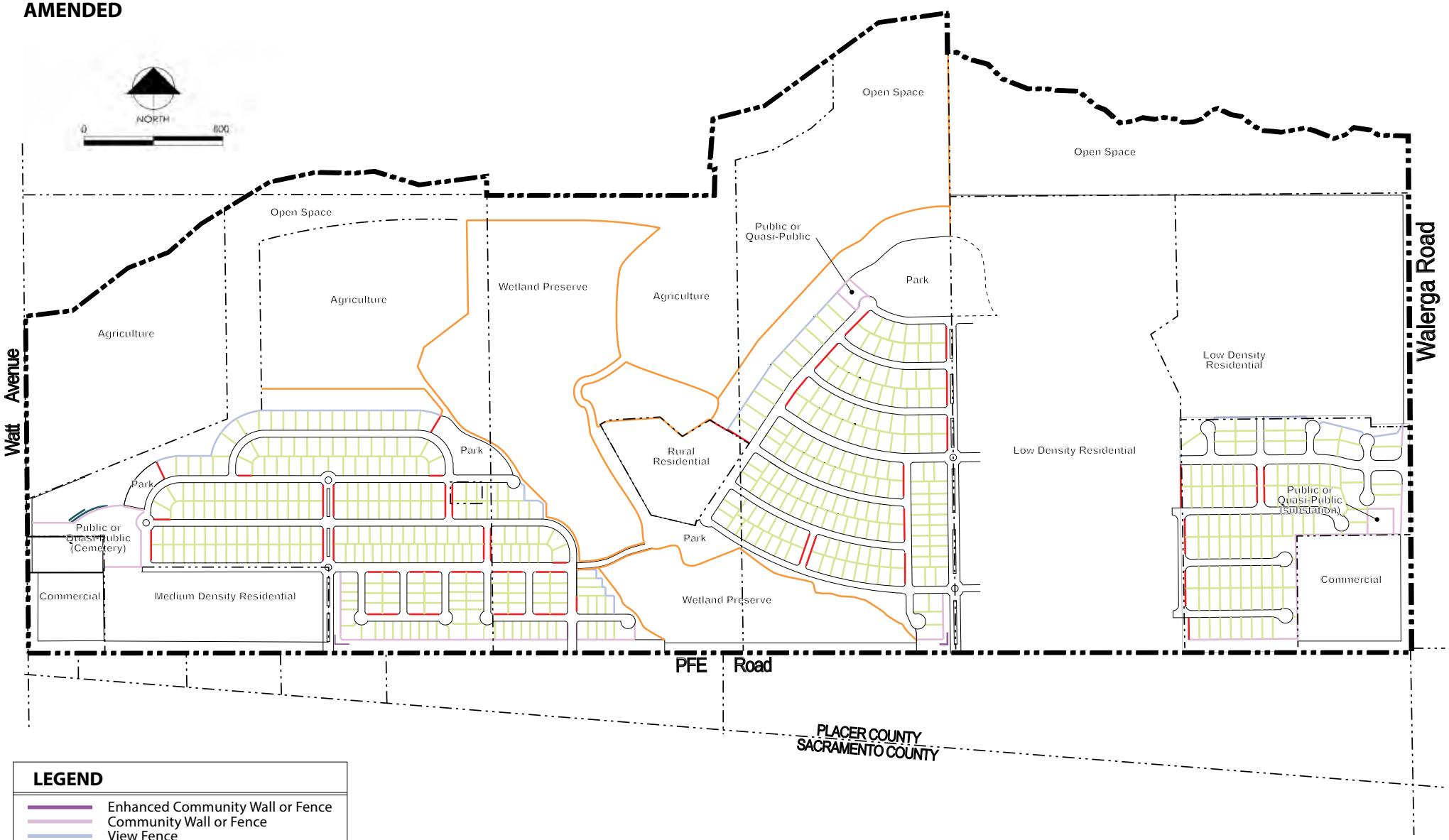

LEGEND

- Enhanced Community Wall or Fence
- Community Wall or Fence
- View Fence
- Enhanced Fence
- Good Neighbor Fence
- Agriculture Fence
- Open Space Barrier
- Retaining Wall

Note:
Wall and fence locations may change subject to acoustical and other studies. Additional open space barrier fencing may be required adjacent to mitigation areas and other sensitive habitats. Retaining walls on individual lots not shown.

FIGURE 4.5 WALLS AND FENCING CONCEPTS
REMAINS THE SAME

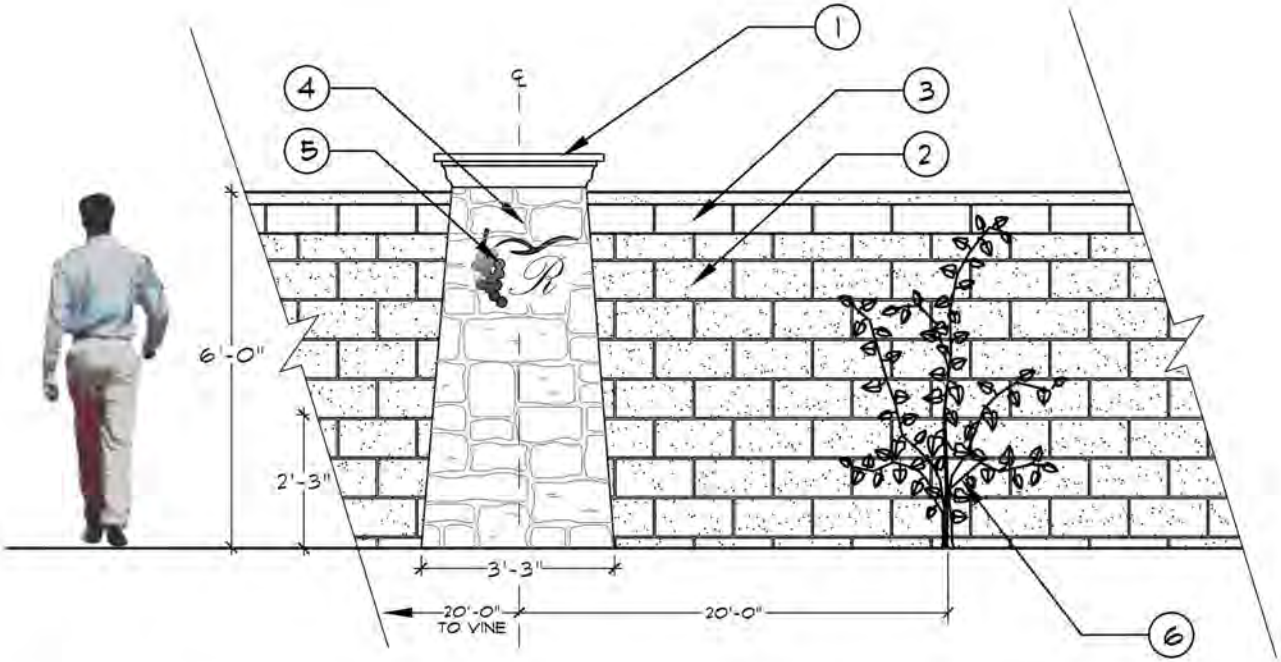

1. PRE CAST FLAT INLAY CAP. HANDALSTONE OR EQUAL.
2. 6"X8"X16" CMU. BASALITE PROTO II SPLIT FACE COMBED D917. TAN PURPLE BLEND, WITH SPLIT PAVER CAP OR EQUAL.
3. 6"X8"X16" CMU. BASALITE PROTO II STD. FACE D917. TAN PURPLE BLEND TOP COURSE BAND OR EQUAL.
4. 32" SQ. TAPERED PILASTER. EL DORADO STONE VENEER SHILO LIMESTONE WITH OVERGROUT GREY, TYPE S MORTAR OR EQUAL. PILASTERS AT WALL ENDS OR MIN. 500 L.F. O.C.
5. CAST BRONZE LOGO ON PILASTER
6. NOTE: VINES ON WALL PLANTED MIN. 20' O.C.

ENHANCED COMMUNITY WALL AND PILASTER

Source: Land Architecture

FIGURE 4.6 WALLS AND FENCING CONCEPTS
REMAINS THE SAME

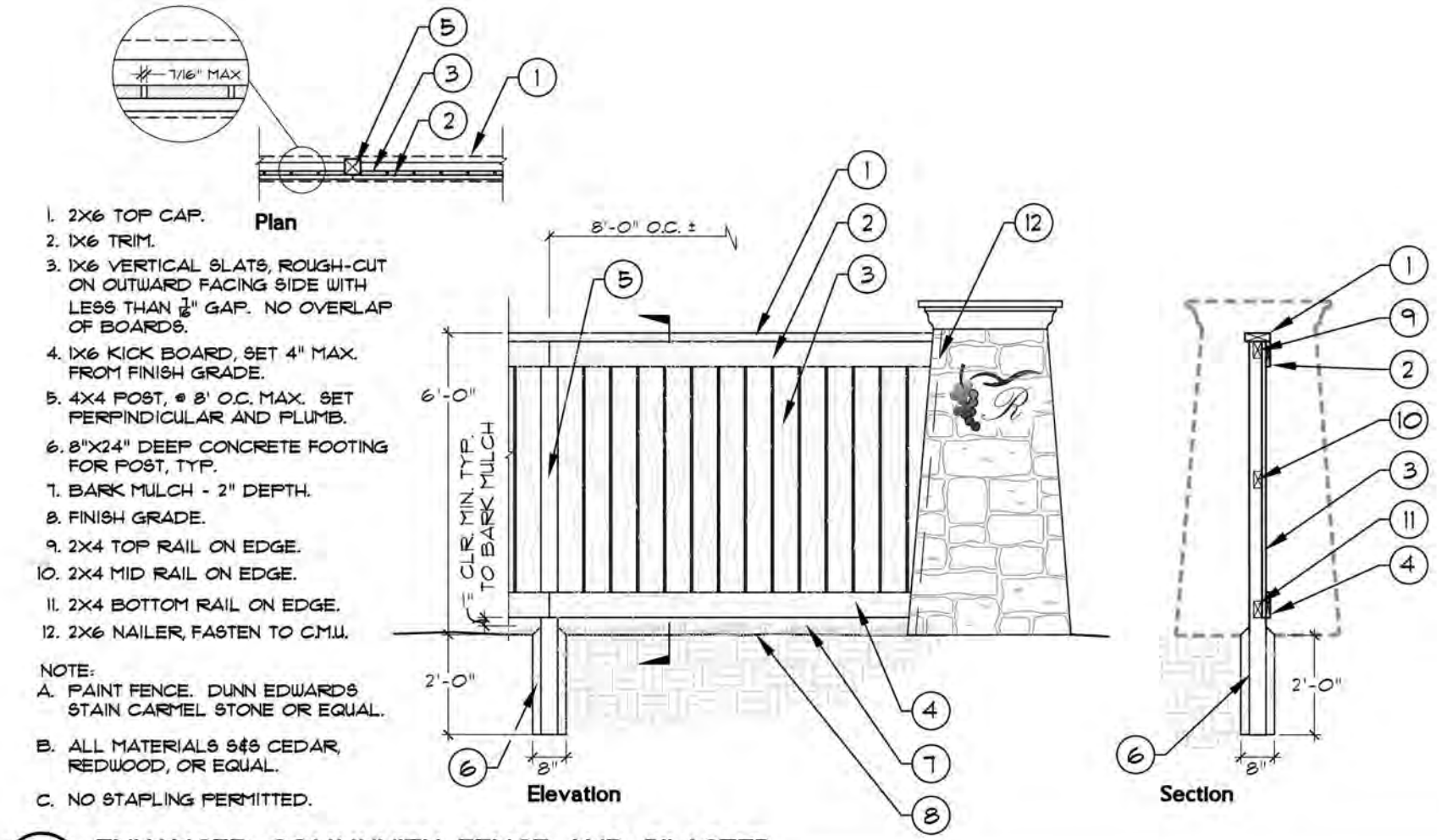

ENHANCED COMMUNITY FENCE AND PILASTER

Source: Land Architecture

FIGURE 4.7 WALLS AND FENCING CONCEPTS
REMAINS THE SAME

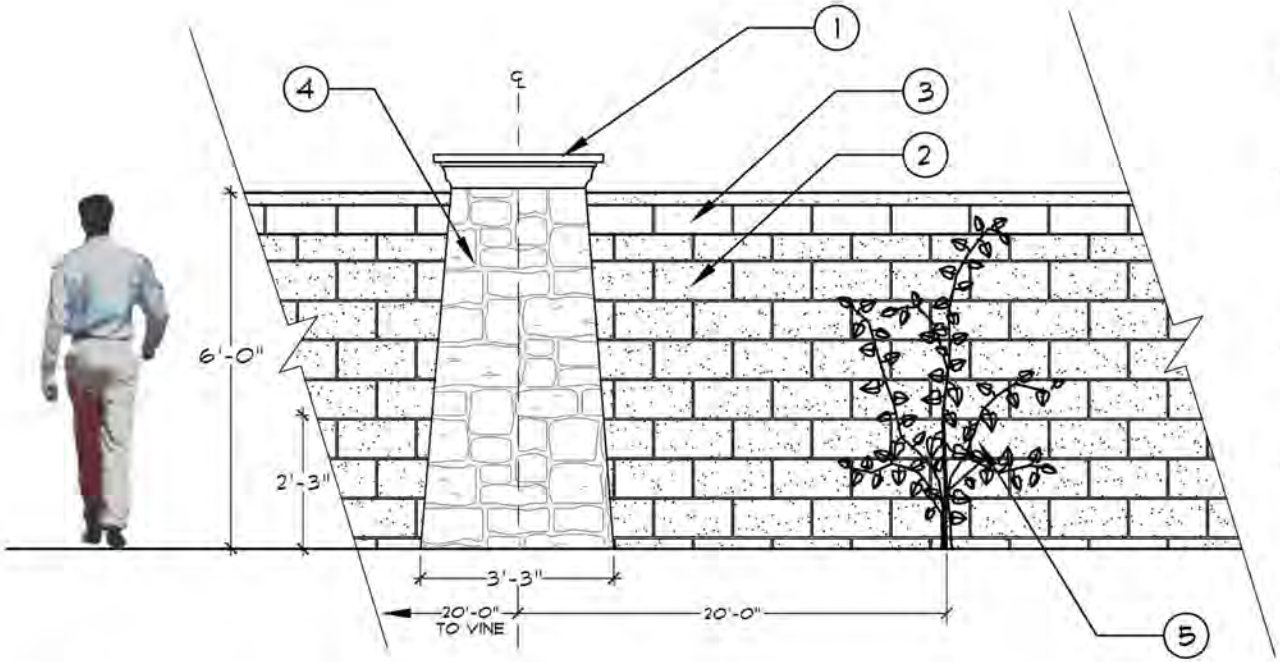

1. PRE CAST FLAT INLAY CAP. HANDALSTONE OR EQUAL.
2. 6"X8"X16" CMU. BASALITE PROTO II SPLIT FACE COMBED D917. TAN PURPLE BLEND, WITH SPLIT PAVER CAP OR EQUAL.
3. 6"X8"X16" CMU. BASALITE PROTO II STD. FACE D917. TAN PURPLE BLEND TOP COURSE BAND OR EQUAL.
4. 32" SQ. TAPERED PILASTER. EL DORADO STONE VENEER SHILO LIMESTONE WITH OVERGROUT GREY, TYPE S MORTAR OR EQUAL. PILASTERS AT WALL ENDS OR MIN. 500 L.F. O.C.
5. NOTE: VINES ON WALL PLANTED MIN. 20' O.C.

COMMUNITY WALL AND PILASTER

Source: Land Architecture

FIGURE 4.8 WALLS AND FENCING CONCEPTS
REMAINS THE SAME

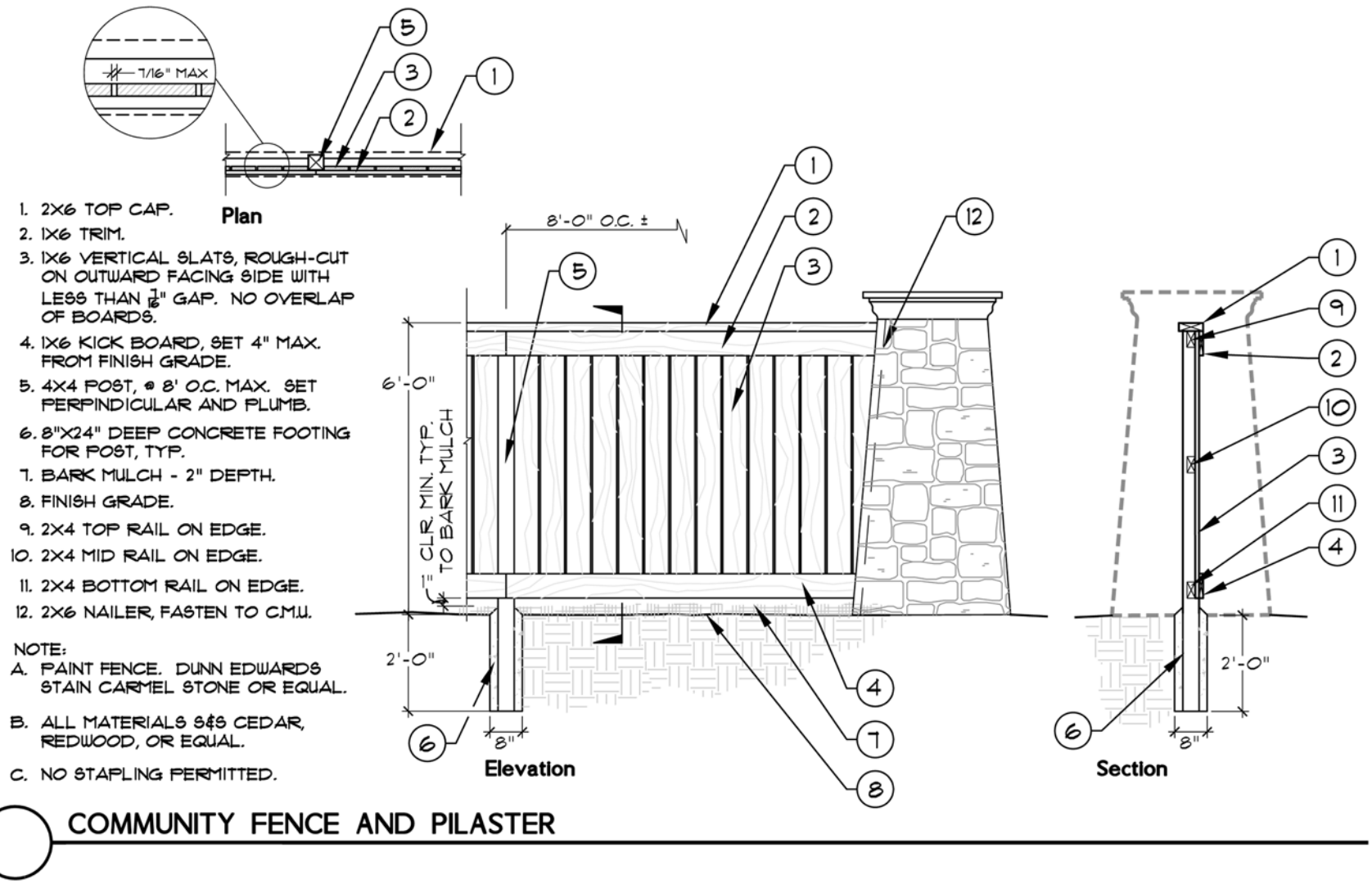

Source: Land Architecture

FIGURE 4.9 WALLS AND FENCING CONCEPTS
REMAINS THE SAME

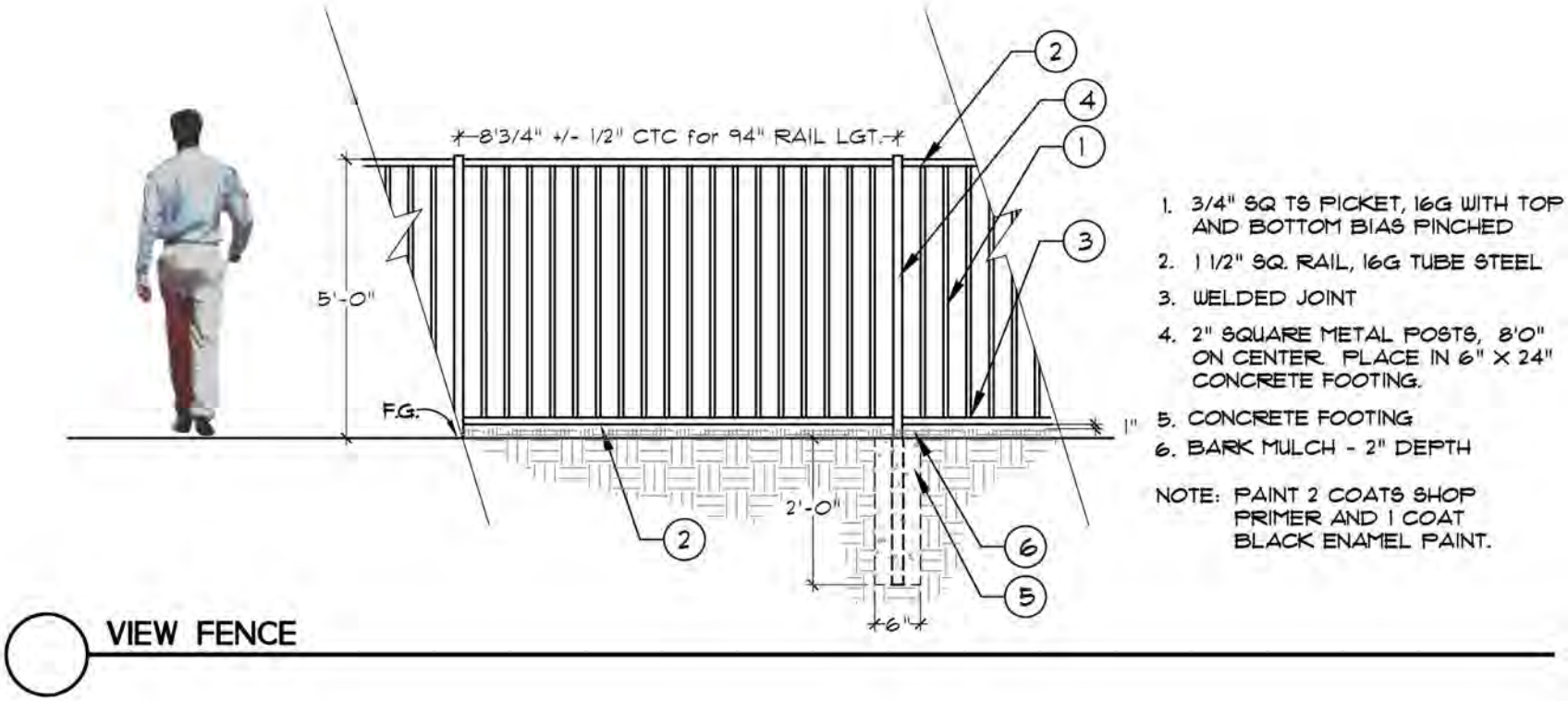

Source: Land Architecture

FIGURE 4.10 WALLS AND FENCING CONCEPTS
REMAINS THE SAME

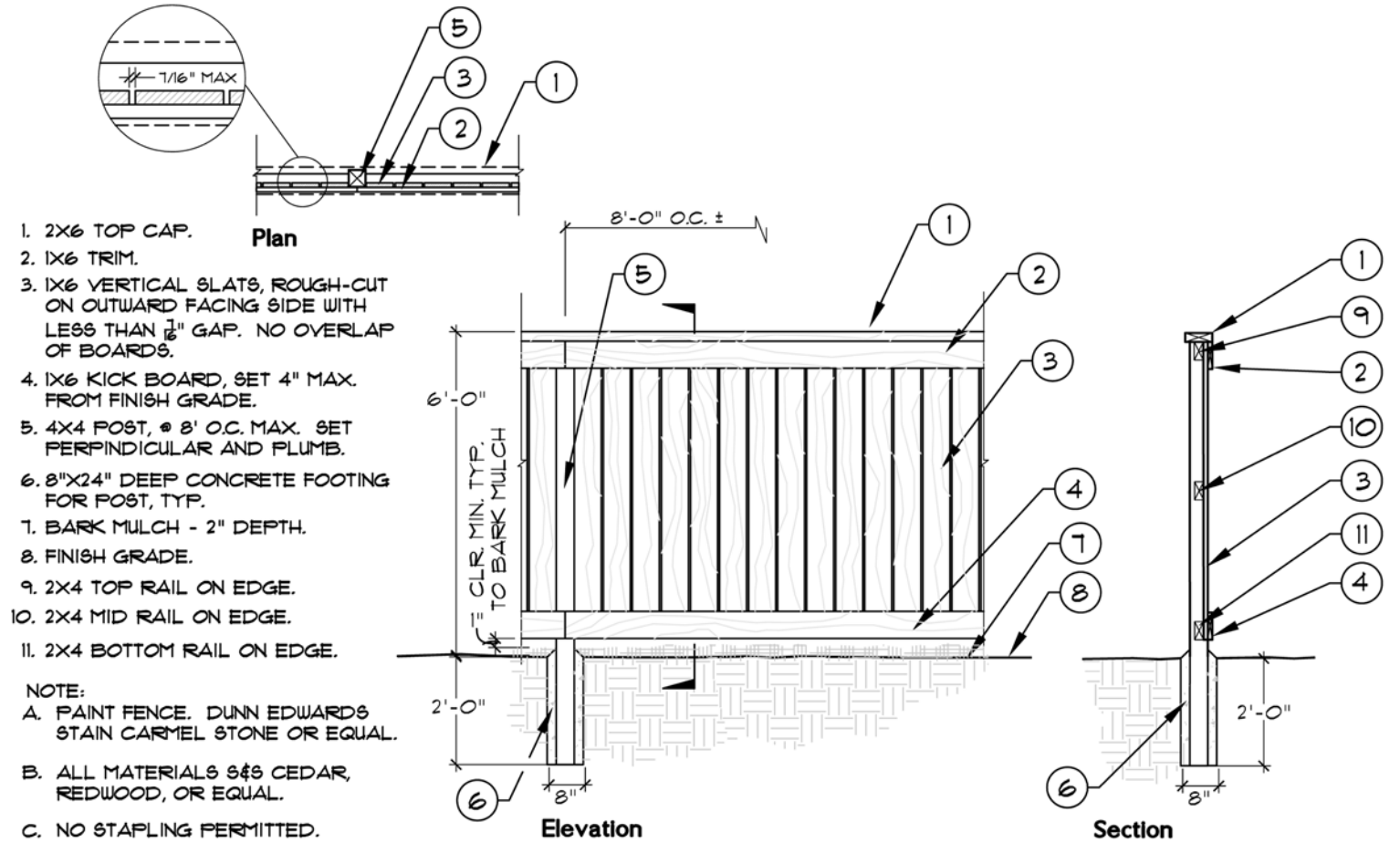

ENHANCED FENCE

Source: Land Architecture

FIGURE 4.11 WALLS AND FENCING CONCEPTS
REMAINS THE SAME

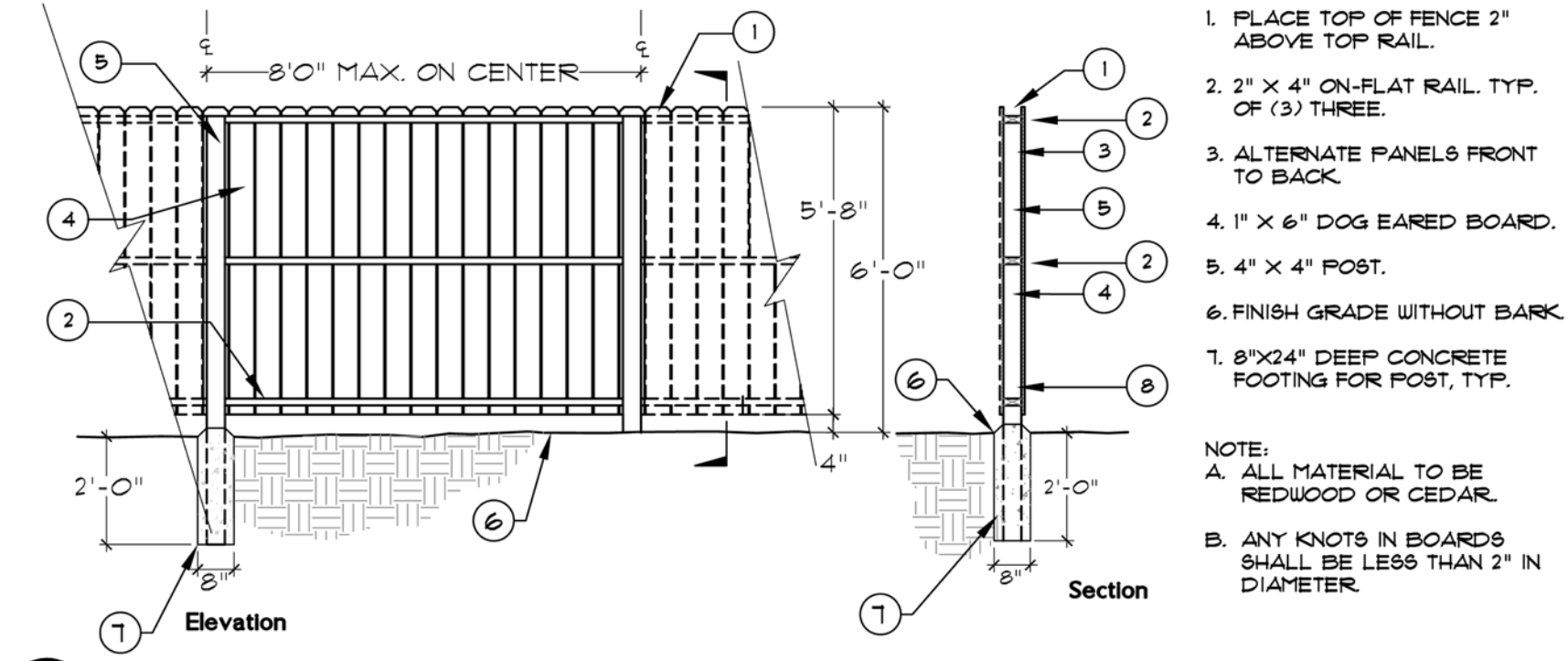

GOOD NEIGHBOR FENCE

Source: Land Architecture

FIGURE 4.12 WALLS AND FENCING CONCEPTS
REMAINS THE SAME

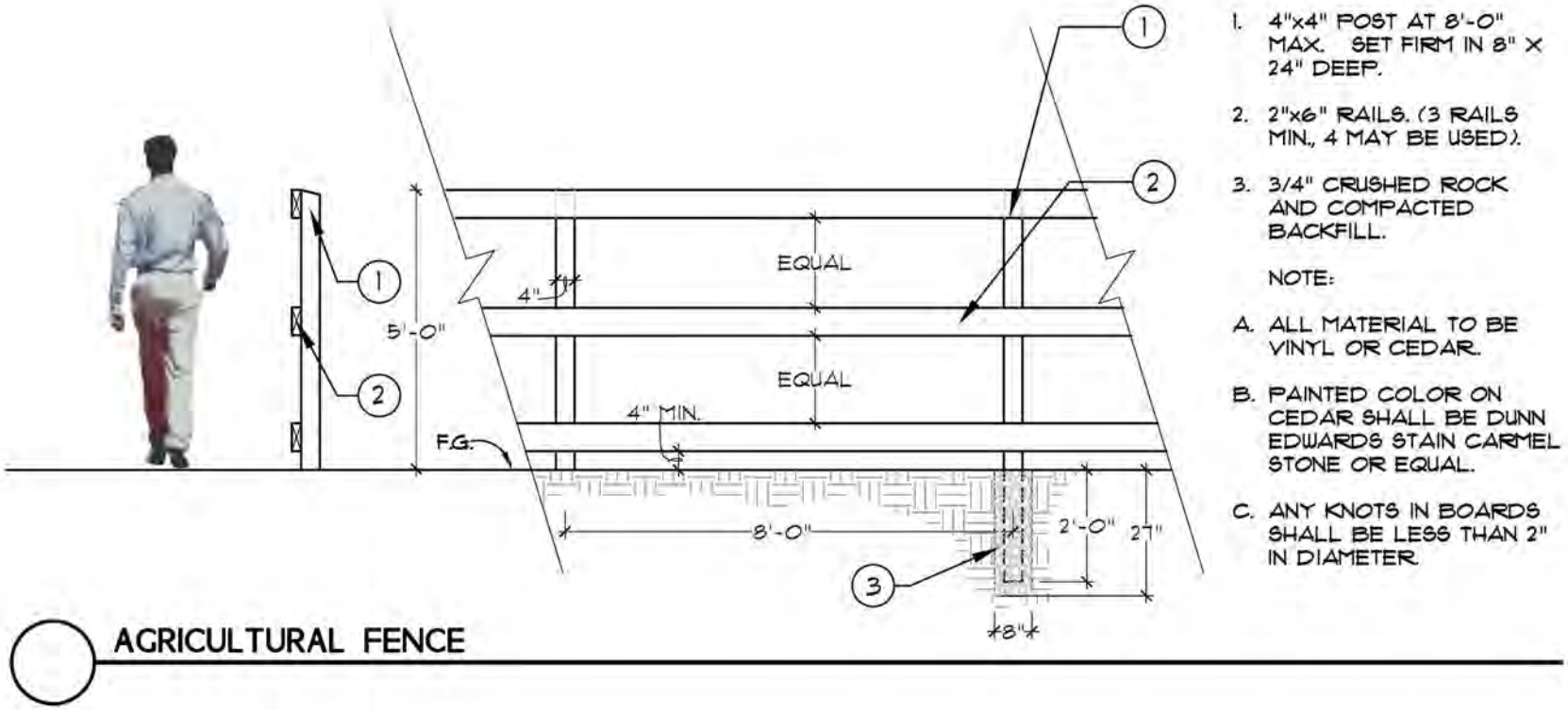

1. 4"x4" POST AT 8'-0" MAX. SET FIRM IN 8" X 24" DEEP.
2. 2"x6" RAILS. (3 RAILS MIN., 4 MAY BE USED).
3. 3/4" CRUSHED ROCK AND COMPACTED BACKFILL.

NOTE:

A. ALL MATERIAL TO BE VINYL OR CEDAR.

B. PAINTED COLOR ON CEDAR SHALL BE DUNN EDWARDS STAIN CARMEL STONE OR EQUAL.

C. ANY KNOTS IN BOARDS SHALL BE LESS THAN 2" IN DIAMETER.

Source: Land Architecture

FIGURE 4.13 WALLS AND FENCING CONCEPTS
REMAINS THE SAME

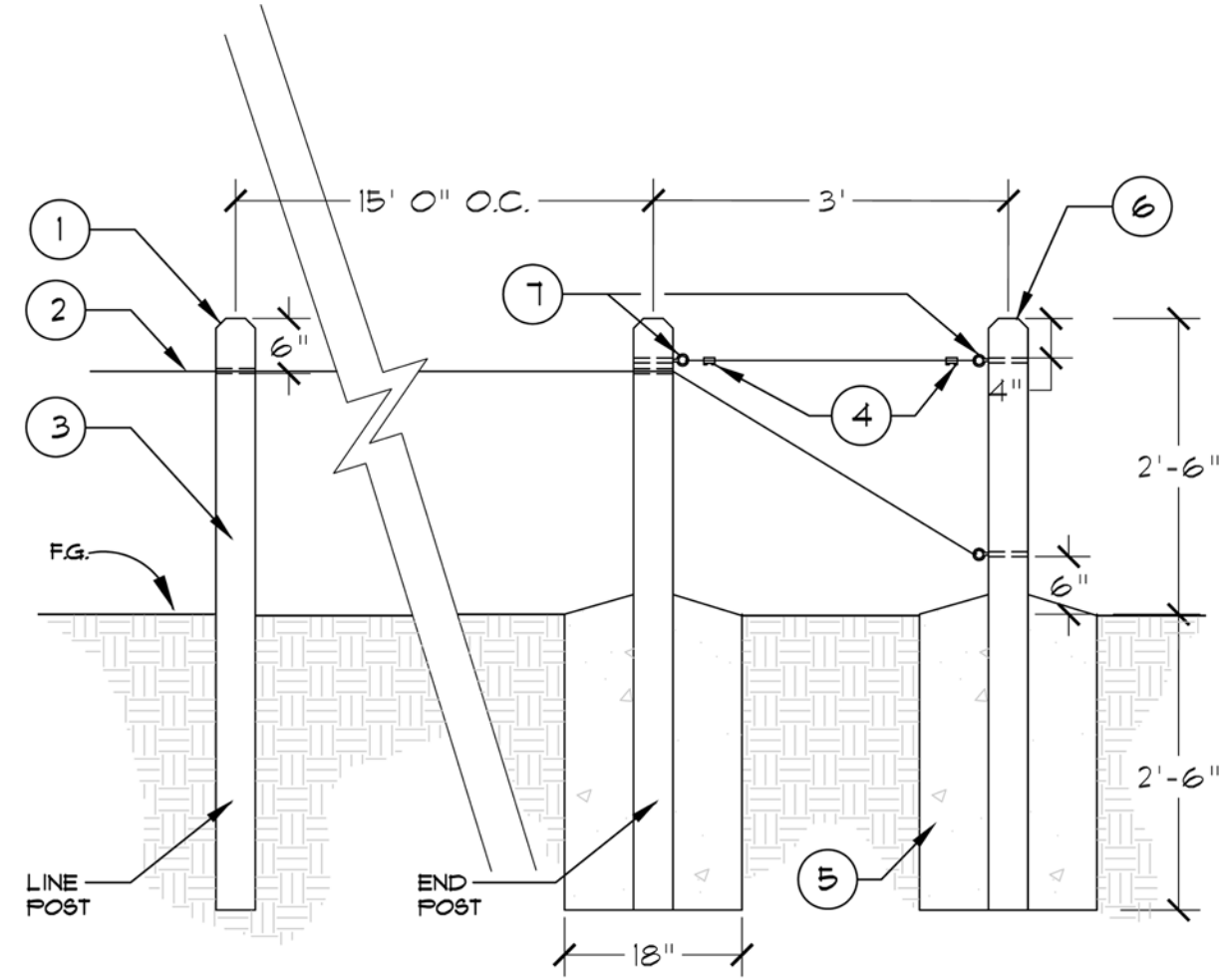

1. 1" CHAMFER ALL AROUND.
2. 3/8" DIA. 7 STRAND GALV. CABLE, TYP. SLIP THROUGH 1/2" DIA. HOLE.
3. 6" X 6" X 5' PT DF WOOD LINE POST.
4. 3/8" X 2" WIRE GALV. ROPE CLIPS AT SPLICES. PLACE NUTS DOWN.
5. CONCRETE FOOTING AT TERMINAL POST.
6. 6" X 6" X 5' PT DF WOOD TERMINAL POST.
7. RECESSED 3/8" GALV. EYE BOLT. 1" I.D. EYE X 8" LENGTH. COUNTERSINK ALL BOLTS.

NOTE:

A. AT FIRE ACCESS POINTS, USE YELLOW PVC COATED CABLE.

B. PROVIDE CONCRETE FOOTINGS AT ALL END POSTS, BENDS AND AS SPECIFIED IN PLANS.

OPEN SPACE BARRIER

Source: Land Architecture

FIGURE 4.14 STREETSCAPE DESIGN CONCEPTS

All elements of this design concept are to remain the same. Dimension and locations of concept elements may change to adapt to the new Site Plan.

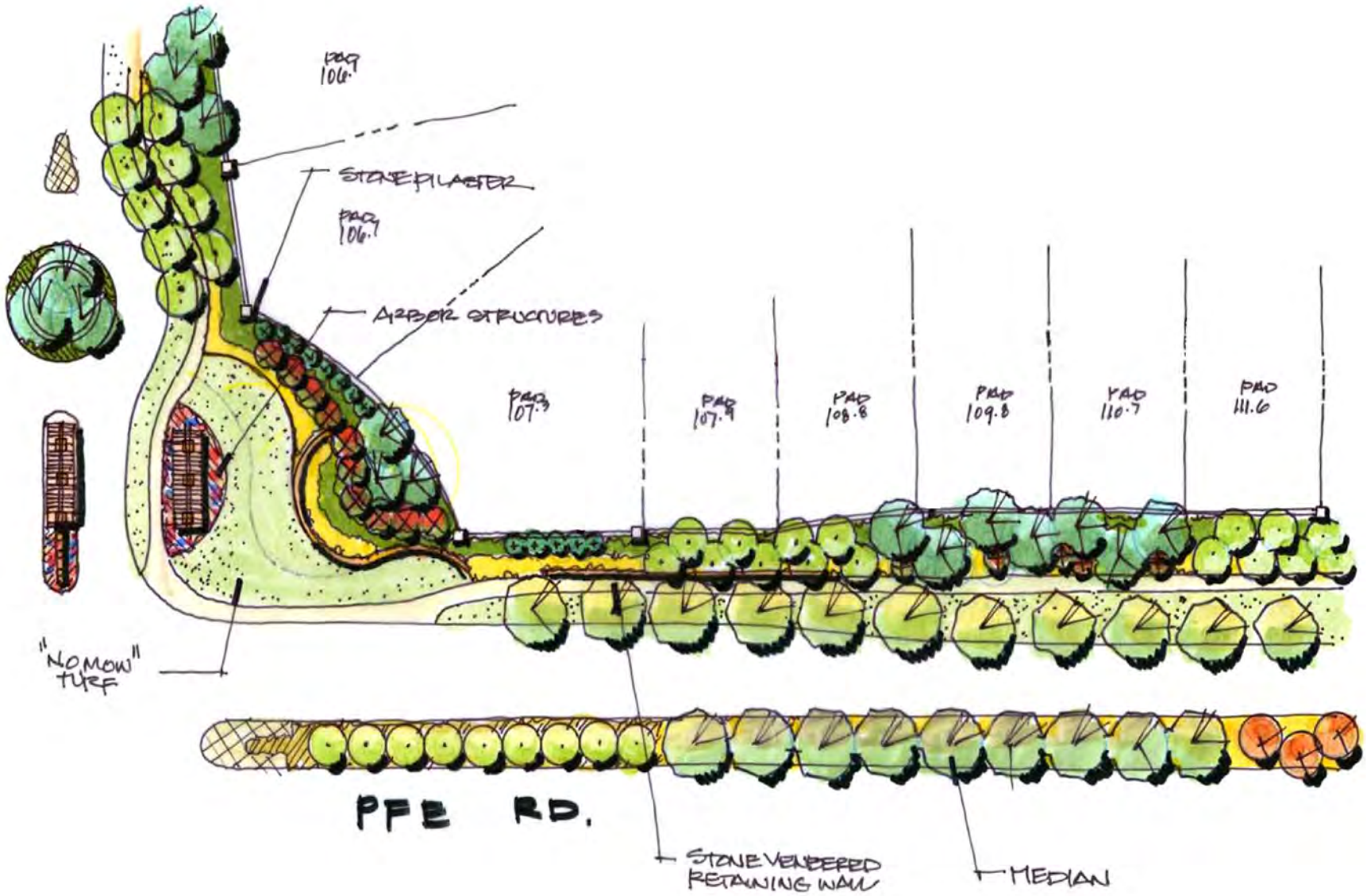

Source: Land Architecture

FIGURE 4.15 STREETSCAPE DESIGN CONCEPTS

All elements of this concept are to remain the same. Dimension and locations of concept elements may change to adapt to the new Site Plan.

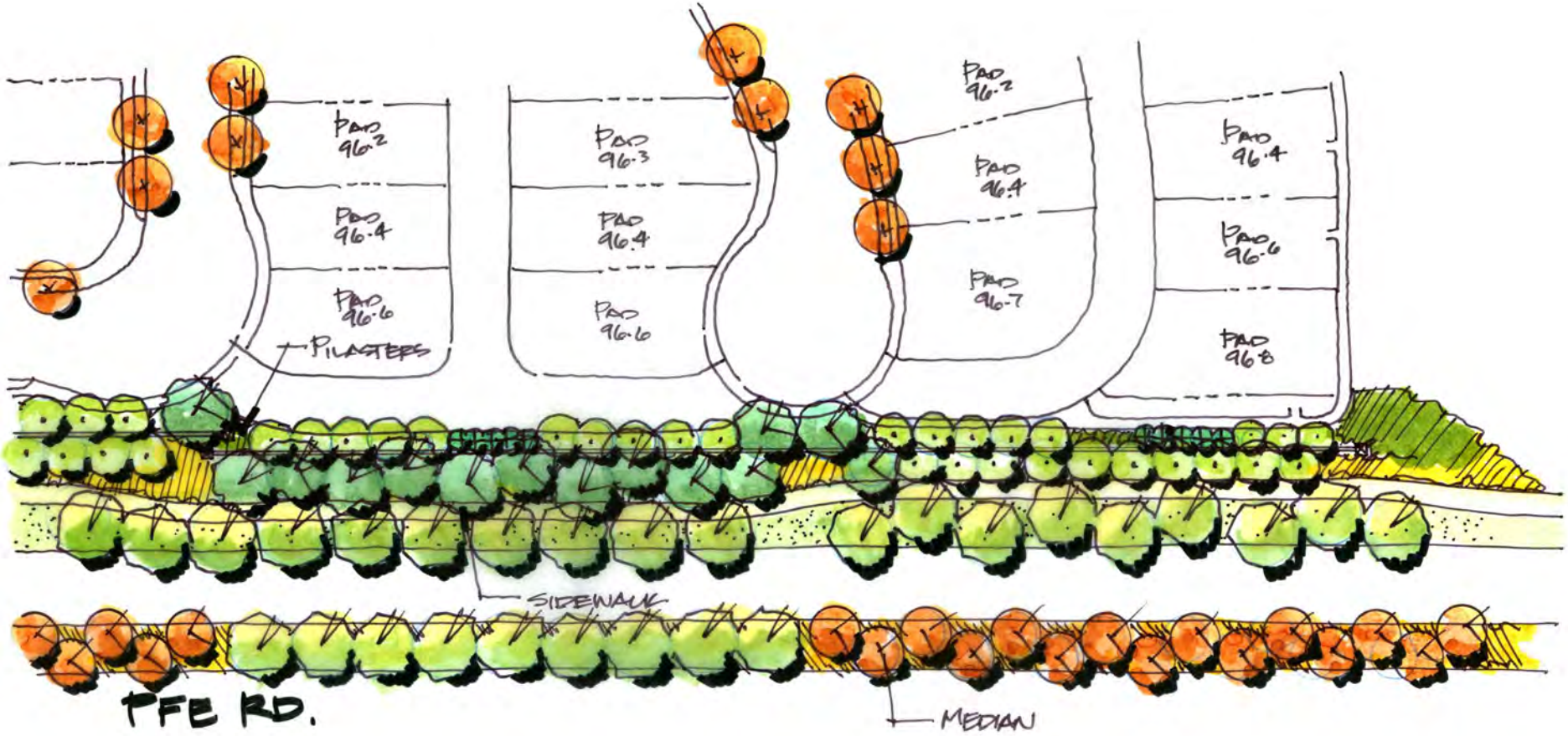

Source: Land Architecture

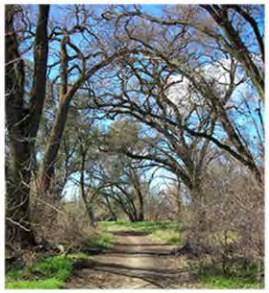

5. Park Design Guidelines

(This page intentionally left blank)

5.1 GENERAL PARK COMPLIANCE

Developer shall provide complete Improvement Plans including details of the construction of the proposed recreational facilities for the review and approval of the County. All recreation facilities shall be designed to meet Americans with Disabilities Act (ADA) Federal Guidelines and, where appropriate, the Consumer Product Safety Commission Guidelines (COSC), and the requirements of the American Society for Testing and Materials (ASTM). Approval shall be evidenced by signature of a Parks Division representative on the Improvement Plans.

All necessary equipment, software, documentation, technical assistance, and training necessary to provide a fully functional centralized irrigation control system compatible with County standards at the time of installation.

The following list describes a sample of amenities that would provide fully developed parkland in conformance with the Placer County General Plan and RVSP. At the time of improvement plans, changes in specific amenities and/or configuration my be approved by the County on a functional equivalent basis provided full quality, functionality, and intensity described by this sample is preserved:

Park Site 1

- Complete water and irrigation system according to County standards
    - Provide for separate systems for both a primary recycled irrigation system and domestic system for potable use, primary backup, and irrigation areas in proximity to concentrated pedestrian traffic.
    - Pay all required hookup fees and facilitate any necessary agreements
- Turf areas shall be installed in the areas shown on the Specific Plan Figure 5.2
- One permanent “bear proof” type trash enclosure designed to hold 2-32 gallon trash bags
- Municipal quality drinking fountain.
- Minimum 6” thick concrete pathway throughout park as generally depicted in Specific Plan Figure 5.2
- Landscaping in general areas as depicted in Riolo Vineyards Specific Plan Figure 5.2. Plant and tree selection shall be specified in consultation with and approved by County Parks Division.
- Minimum of three municipal quality park benches located throughout park
    - Bench design shall be consistent with Riolo Vineyards Design Guidelines
    - Benches shall be installed on concrete pads contiguous to the path/trail system
    - Benches shall be chained to anchors placed in concrete pads
- Bollards, boulders and/or landscape configuration placed at maximum 5 foot clear space along street frontage to prevent unauthorized vehicle access
- Information kiosk according to County provided design standard.
- Park name sign as approved by the County DRC.

Park Site 2

- Complete water and irrigation system according to County standards
    - Provide for separate systems for both a primary recycled irrigation system and domestic system for potable use, primary backup, and irrigation areas in proximity to concentrated pedestrian traffic.
    - Pay all required hookup fees and facilitate any necessary agreements
- Turf areas shall be installed in the areas shown on the Specific Plan Figure 5.3.
- One permanent “bear proof” type trash enclosure designed to hold 2-32 gallon trash bags
- Municipal quality drinking fountain.

- Minimum 6” thick concrete pathway throughout park as generally depicted in Specific Plan Figure 5.3
- Landscaping in general areas as depicted in Riolo Vineyards Specific Plan Figure 5.3. Plant and tree selection shall be specified in consultation with and approved by County Parks Division.
- Adventure Playground
  - Installed municipal quality age 2-5 appropriate play structure
  - Installed municipal quality age 5-12 appropriate play structure
  - Poured in place rubber fall zone matting with appropriate fall zones
  - Concrete/masonry perimeter
  - Drinking fountain located in proximity to playground area
- Sports Court
  - Minimum 7200 square feet
  - Concrete surfaced
  - Black vinyl coated chain link perimeter fence
  - Striping and municipal quality netting as approved at the time of improvement plans
  - Basketball hoop and support.
- Covered Picnic Pavilion
  - Minimum 24’ x 24’ municipal quality, stylized consistent with Riolo Vineyards Design Guidelines as approved by the County.
  - Minimum 6” concrete floor
  - Masonry bar-b-que unit with municipal quality charcoal grill inserts with minimum of six square feet of grilling surface
  - Municipal quality picnic tables with chains and anchors
  - Electrical outlet
- Minimum of three municipal quality park benches located throughout park
  - Bench design shall be consistent with Riolo Vineyards Design Guidelines
  - Benches shall be installed on concrete pads contiguous to the path/trail system
  - Benches shall be chained to anchors placed in concrete pads
- Bollards, boulders and/or landscape configuration placed at maximum 5 foot clear space along street frontage to prevent unauthorized vehicle access
- Information kiosk according to County provided design standard.
- Park name sign as approved by the County DRC.

Park Site 3

- Complete Baseball/Softball field including
  - Brick-clay skinned infield with base pads
  - Pitchers mound
  - Enclosed dugouts with benches
  - 30’ tall backstop continuous beyond 1st and 3rd bases
  - Electrical outlets supplied to backstop and pitchers mound
  - Three tiered commercial quality bleachers behind each dugout
  - Minimum 6 inch thick by approximately 15 feet wide concrete patio area behind dugouts
  - Drinking fountain with jug filler
- Youth soccer field
  - Municipal quality soccer goals.
  - Configuration to allow for expansion into two youth soccer fields when the adjacent Elliot parcel develops and completes construction of Park #3
- Complete water and irrigation system according to County standards
  - Provide for separate systems for both a primary recycled irrigation system and domestic system for potable use, primary backup, and irrigation areas in proximity to concentrated pedestrian traffic.
  - Pay all required hookup fees and facilitate any necessary agreements
- Turf areas shall be installed in the areas shown on the Specific Plan Figure 5.4
- Construct functional sewer system
  - Obtain and complete sewer permit
  - Pay any hookup fees
- The trail between Park Site 3 and the backbone Dry Creek Corridor Trail shall be constructed no later than the acceptance of

improvements for Park Site 3

- Five (5) permanent “bear proof” type trash enclosures designed to hold 2-32 gallon trash bags each
- Fully functional four-stall concrete/masonry restroom building with snack bar – stylized consistent with the Riolo Vineyards Design Guidelines as approved by the County.
  - Stainless steel/penal rated fixtures
  - Dual drinking fountains mounted to exterior
  - Counter tops lighting, and roll up doors at snack bar
  - Security lighting at restroom
  - Integrated 150 square foot minimum storage area with separate door entry
- Covered Picnic Pavilion
  - Minimum 24’ x 24’ municipal quality stylized consistent with Riolo Vineyards Design Guidelines as approved by the County.
  - Minimum 6” concrete floor
  - Masonry bar-b-que unit with municipal quality charcoal grill inserts with minimum of six square feet of grilling surface
  - Municipal quality picnic tables with chains and anchors
  - Electrical outlet
- Minimum 6” thick concrete pathway and patio area throughout park as generally depicted in Specific Plan Figure 5.4
- Adventure Playground
  - Installed municipal quality age 5-12 appropriate play structure
  - Installed municipal quality age 2-5 appropriate play structure
  - Poured in place rubber fall zone matting with appropriate fall zones
  - Concrete/masonry perimeter
  - Drinking fountain located in proximity to playground area
- Landscaping in general areas as depicted in Riolo Vineyards Specific Plan Figure 5.4. Plant and tree selection shall be specified in consultation with and approved by County Parks Division.
- Minimum of six municipal quality park benches located throughout park
  - Bench design shall be consistent with Riolo Vineyards Design Guidelines
  - Benches shall be installed on concrete pads contiguous to the path/trail system
  - Benches shall be chained to anchors placed in concrete pads
- Paved parking Areas
  - Minimum 11 stall parking lot onsite
  - Approximately 19 street side stalls or maximum achievable along road frontage
  - Drainage system and pollutant intercepts as approved by the Regional Water Quality Control Board and County NPDES Division.
  - Signage, striping, and pavement markings as required by law/code.
  - Entrance gate
- Bollards or boulders placed at maximum 5 foot clear space along street frontage and parking lot to prevent unauthorized vehicle access
- Information kiosk according to County provided design standard.
- Park name sign as approved by the County DRC.

Park Site 4

- Complete water and irrigation system according to County standards
  - Provide for separate systems for both a primary recycled irrigation system and domestic system for potable use, primary backup, and irrigation areas in proximity to concentrated pedestrian traffic.
  - Pay all required hookup fees and facilitate any necessary agreements
- Turf areas shall be installed in the areas shown on the Specific Plan Figure 5.5
- One permanent “bear proof” type trash enclosure designed to hold 2-32 gallon trash bags
- Municipal quality drinking fountain.
- Minimum 6” thick concrete pathway throughout park as generally

depicted in Specific Plan Figure 5.5

- Landscaping in general areas as depicted in Riolo Vineyards Specific Plan Figure 5.5. Plant and tree selection shall be specified in consultation with and approved by County Parks Division.
- Minimum of six municipal quality park benches located throughout park
  - Bench design shall be consistent with Riolo Vineyards Design Guidelines
  - Benches shall be installed on concrete pads contiguous to the path/trail system
  - Benches shall be chained to anchors placed in concrete pads
- Bollards, boulders and/or landscape configuration placed at maximum 5 foot clear space along street frontage to prevent unauthorized vehicle access
- Information kiosk according to County provided design standard.
- Park name sign as approved by the County DRC.
- Fully functional two-stall concrete/masonry restroom building - CXT Montrose model or approved alternate stylized consistent with the Riolo Vineyards Design Guidelines as approved by the County.
  - Stainless steel/penal rated fixtures
  - Dual drinking fountains mounted to exterior
  - Security lighting at restroom
- Construct functional sewer system
  - Obtain and complete sewer permit
  - Pay any hookup fees
- Covered Picnic Pavilion
  - Minimum 1200 square feet of single or combined roof area
  - Municipal quality, stylized consistent with Riolo Vineyards Design Guidelines as approved by the County
  - Minimum 6” concrete floor
  - Masonry bar-b-que unit with municipal quality charcoal grill inserts with minimum of six square feet of grilling surface
  - Municipal quality picnic tables with chains and anchors
  - Electrical outlet
- Playground facilities
  - Installed municipal quality age 2-5 appropriate play structure
  - Installed municipal quality age 5-12 appropriate play structure
  - Poured in place rubber fall zone matting with appropriate fall zones
  - Concrete/masonry perimeter
  - Drinking fountain located in proximity to playground area

6. *Appendix*

(This page intentionally left blank)

APPENDIX A

Recommended Plant List

OPEN SPACE			
	Botanical Name	*Common Name*	*Distribution Percentage*
Upland-Savana			
	Trees		
	Aesculus californica	*California Buckeye*	*15%*
	Quercus douglasii	*Blue Oak*	*15%*
	Quercus lobata	*Valley Oak*	*55%*
	Quercus wislizenii	*Interior Live Oak*	*15%*
			100%
	Shrubs		
	Arctostaphylos sp.	*Manzanita*	*15%*
	Artemisia californica	*California Sagebrush*	*10%*
	Baccharis pilularis	*Coyote Brush*	*30%*
	Ceanothus sp.	*California Lilac*	*10%*
	Heteromeles arbutifolia	*Toyon*	*20%*
	Rhamnus ilicifolia	*Hollyleaf red berry*	*15%*
			100%
	Groundcover		
	Bromus carinatus	*California Brome*	*15%*
	Hordeum brachyantherum	*Meadow Barley*	*15%*
	Muhlenbergia rigens	*Deergrass*	*40%*
	Nassella pulchra	*Purple Needlegrass*	*15%*
	Lupinus polyphyllus	*Blue Lupine*	*15%*
			100%
Riparian-Woodland (2- to 5-year event creek flow)			
	Trees		
	Acer negundo	*Boxelder*	*5%*

	Alnus rhombifolia	*White Alder*	*5%*
	Fraxinus latifolia	*Oregon Ash*	*10%*
	Populus fremontii	*Fremont Cottonwood*	*25%*
	Quercus lobata	*Valley Oak*	*5%*
	Salix gooddingii	*Goodding's Willow or Black Willow*	*15%*
	Salix lasiandra	*Yellow Willow*	*15%*
	Salix lasiolepis	*Arroyo Willow*	*20%*
			100%
	Shrubs		
	Baccharis pilularis	*Coyote Brush*	*20%*
	Cephalanthus occidentalis	*Buttonbush*	*40%*
	Rosa californica	*California Wild Rose*	*20%*
	Rubus ursinus	*California Blackberry*	*20%*
			100%
	Vines		
	Vitis californica	*California Wild Grape*	*30%*
	Aristolochia californica	*California Dutchman's Pipe*	*70%*
			100%
	Groundcover		
	Artemisia californica	*California Sagebrush*	*30%*
	Carex barbarae	*Barbara Sedge*	*40%*
	Leymus triticoides	*Creeping Wildrye*	*15%*
	Nassella pulchra	*Purple Needlegrass*	*15%*
			100%
Riparian-Wetland (<2-year event creek flow)			
	Trees		
	Alnus rhombifolia	*White Alder*	*30%*
	Populus fremontii	*Fremont Cottonwood*	*30%*
	Salix hindsiana	*Sandbar Willow*	*40%*
			100%
	Groundcover		
	Carex praegranilis	*Clustered Field Sedge*	*10%*

	Equisetum hyemale	*Horsetail*	*10%*
	Juncus effusus var. pacificus	*Pacific Rush*	*30%*
	Juncus xiphioides	*Iris-leaved Rush*	*30%*
	Scirpus acutus	*Tule*	*20%*
			100%
LANDSCAPE BUFFERS			
	Botanical Name	*Common Name*	
	Trees		
	Aesculus californica	*California Buckeye*	*15%*
	Cercis occidentalis	*Western Redbud*	*10%*
	Platanus racemosa	*Western Sycamore*	*20%*
	Cedrus deodar	*Deodar Cedar*	*10%*
	Quercus douglasii	*Blue Oak*	*10%*
	Quercus lobata	*Valley Oak*	*35%*
			100%
	Shrubs		
	Arctostaphylos densiflora 'Howard'	*McMinn's Manzanita*	*10%*
	Artemisia californica	*California Sagebrush*	*15%*
	Ceanothus sp.	*California Lilac*	*15%*
	Cephalanthus occidentalis	*Buttonbrush*	*15%*
	Cistus purpurea	*Orchid Rockrose*	*10%*
	Cistus salvifolius	*Sageleaf Rockrose*	*5%*
	Fremontodendron californicum	*Common Flannel Bush*	*15%*
	Heteromeles arbutifolia	*Toyon*	*15%*
			100%
	Groundcover		
	Arctosyaphylos 'Emerald Carpet'	*Emerald Carpet Manzanita*	*15%*
	Baccharis pilularis (dwarf)	*Coyote Brush*	*20%*
	Carpenteria californica	*Bush Anemone*	*5%*
	Iris douglasiana	*Douglas Irus*	*5%*
	Mimulus aurantiacus	*Monkey Flower*	*10%*
	Muhlenbergia rigens	*Deergrass*	*25%*
	Penstemon spp.	*Penstemon*	*5%*

	Vitis californica *Zauschneria californica*	*California Wild Grape* *California Fuchsia*	*10%* *5%* *100%*
STREETSCAPE			
	Botanical Name	*Common Name*	
	Trees		
	Acer platanoides *Cercis occidentalis* *Eucalyptus polyanthemus* *Pinus canariensis* *Cedrus deodar* *Platanus acerifolia* *Pyrus calleryana* *Quercus douglasii* *Quercus pilustris* *Quercus rubra* *Quercus suber* *Acer rubrum* *Tilia cordata* *Zelkova Serrata*	*Norway Maple 'Crimson Sentry'* *Western Redbud* *Silver Dollar Gum* *Canary Island Pine* *Deodar Cedar* *London Plane Tree* *Flowering Pear* *Blue Oak* *Pin Oak* *Red Oak* *Cork Oak* *Red Maple 'Autumn Blaze'* *Little Leaf Linden* *Sawleaf Zelkova*	*Large Screen Evergreen* *Flowering Accent Deciduous* *Large Canopy Evergreen* *Large Screen Evergreen* *Large Screen Evergreen* *Large Canopy Evergreen* *Accent Deciduous* *Large Canopy Evergreen* *Large Canopy Evergreen* *Large Canopy Evergreen* *Large Canopy Evergreen* *Large Canopy Evergreen* *Large Canopy Evergreen* *Large Canopy Evergreen*
	Shrubs		
	Arctostaphylos spp. *Artemisia californica* *Ceanothus spp.* *Berberis* *Elaeagnus pungens* *Escallonia 'Fradesii'* *Fremontodendron californicum* *Rhaphiolepis indica* *Xylosma congestum* *Ribes aureum*	*Manzanita* *California Sagebrush* *California Lilac* *Barberry* *Silverberry* *Escallonia* *Common Flannel Bush 'Springtime' or 'Dancer'* *Indian Hawthorn* *Xylosma congestum* *Golden Currant*	

	Vines		
	Clematis armandii	*Evergreen Clematis*	*Train to Walls/Fences*
	Clytostoma callistegioides	*Violet Trumpet Vine*	*Train to Walls/Fences*
	Hardenbergia violacea	*Hardenbergia*	*Train to Walls/Fences*
	Lonicera japonica 'Halliana'	*Hall's Honeysuckle*	*Train to Walls/Fences*
	Vitis pilularis	*California Wild Grape*	*Train to Walls/Fences*
	Groundcover		
	Arctostaphylos uva-ursi	*Bearberry*	
	Festuca arundinacea	*Tall Fescue*	*Turf-limited accent areas*
	Gazania	*Hybrid*	
	Ceonothus gloriosus	*Point Reyes' Ceonothus*	
	Santolina chamaecyparissus	*Lavender Cotton*	
	Verbena peruviana	*Verbena*	
GATEWAYS			
	Botanical Name	*Common Name*	*Distribution Percentage*
	Trees		
	Acer rubra	*'October Glory' Maple*	*Accent Deciduous*
	Betula alba	*White Birch*	*Accent Deciduous*
	Cinnamomum camphora 'Monum'	*Camphor Tree*	*Large Canopy Evergreen*
	Cornus florida	*Eastern Dogwood*	*Accent Deciduous*
	Fraxinus uhdei	*Evergreen Ash*	*Large Canopy Evergreen*
	Lagerstroemia indica	*Crape Myrtle*	*Orchard Accent Deciduous*
	Sequia sempervirens	*'Aptos Blue' Redwood*	*Large Screen Evergreen*
	Prunus cerasifera	*Flowering Cherry*	*Orchard Accent Deciduous*
	Pyrus calleryana	*Flowering Pear*	*Orchard Accent Deciduous*
	Quercus rubra	*Red Oak*	*Large Canopy Evergreen*
	Rhus lancea	*African Sumac*	*Accent Evergreen*
	Sequia sempervirens	*Redwood*	*Large Screen Evergreen*
	Shrubs		
	Arbutus unedo	*Strawberry Tree/Shrub*	

	Pennisetum setaceum 'Rubrum'	*Purple Fountain Grass 'Springtime' or 'Dancer'*	
	Rhaphiolepis indica	*Indian Hawthorn*	
	Vines		
	Clematis armandii	*Evergreen Clematis*	
	Vitis californica	*California Wild Grape*	
	Groundcover		
	Eschscholzia californica	*California Poppy*	
	Festuca arundinacea	*Tall Fescue*	*Turf-limited accent areas*
	Lantana camara	*Wild Lantana*	
	Lupinus polyphyllus	*Blue Lupine*	
	Penstemon spp.	*Penstemon*	
	Portulaca grandiflora	*Rose Moss*	
	Salvia greatae	*Lavender Sage*	
	Zauschneria californica	*California Fuchsia*	
PARKS			
	Botanical Name	*Common Name*	*Distribution Percentage*
	Trees		
	Acer Rubra	*'October Glory' Maple*	*Accent Deciduous*
	Calocedrus decurrens	*Incense Cedar*	*Large Screen Evergreen*
	Fraxinus velutina	*Arizona Ash*	*Deciduous Spreading Tree*
	Maytenus boaria	*Mayten tree*	*Accent Evergreen*
	Cedrus deodar	*Deodar Cedar*	*Large Screen Evergreen*
	Pistacia chinensis	*Chinese Pistache*	*Large Deciduous (not in turf)*
	Pyrus calleryana	*Flowering Pear*	*Accent Deciduous*
	Quercus lobata	*Valley Oak*	*Large Canopy Deciduous*
	Quercus suber	*Cork Oak*	*Large Canopy Evergreen*
	Zelkova serrata	*Sawleaf Zelkova*	*Deciduous Spreading Tree*
	Nyssa sylvatica	*Sour Gum*	*Deciduous Spreading Tree*
	Shrubs		

	Artostaphylos spp. *Ceanothus spp.* *Abelia grandiflora* *Arbustus unedo* *Xylosma congestum* *Fothergilla major*	*Manzanita* *California Lilac* *Abelia* *Strawberry Tree/Shrub* *Xylosma* *Monticola*	
	Groundcover		
	Rhaphiolepis indica *Arctostaphylos densiflora* *Eschscholzia californica* *Dietes vegeta* *Festuca arundinacea* *Lupinus polyphyyllus* *Mahonia repens*	*'Ballerina' or 'Pinkie' Indian Hawthorn* *Carpet Manzanita* *California Poppy* *Fortnight Lily* *Tall Fescue* *Blue Lupine* *Creeping Mahonia*	*Turf Areas*
RESIDENTIAL LANDSCAPE			
	Botanical Name	*Common Name*	*Water Usage*
	Trees		
	Acer R. 'Red Sunset'	*Red Sunset Maple*	*High*
	Fraxinus O. 'Raywood'	*Raywood Ash*	*Moderate*
	Platanus X. A. 'Columbia'	*Columbia London Plane*	*Moderate*
	Quercus Coccinea	*Scarlet Oak*	*Moderate*
	Cercis Occidentalis	*Western Redbud*	*Very Low*
	X Cupressocyparis Leylandii	*Leyland Cypress*	*Moderate*
	Lagerstroemia I. 'Natchez'	*Crape Myrtle*	*Low*
	Laurus Nobilis	*Sweet Bay*	*Low*
	Magnolia X Soulangeana	*Saucer Magnolia*	*Moderate*
	Pinus Eldarica	*Eldarica Pine*	*Low*
	Shrubs		

	Artemesia 'Powis Castle'	*Powis Castle Artemesia*	*Low*
	Artostaphylos Densiflora	*Howard McMinn Manzanita*	*Low*
	Artostaphylos Hookeri	*Monterey Manzanita*	*Low*
	Bacharis P. 'Twin Peaks'	*Dwarf Coyote Bush*	*Low*
	Berberis Thunbergii 'Rose Glow'	*Japanese Barberry*	*Low*
	Cistus Salvifolius	*Sageleaf Rockrose*	*Low*
	Cotoneaster Dameri	*Bearberry Cotoneaster*	*Low*
	Grevillea 'Mt. Tamboritha'	*Mt. Tamboritha Grevillea*	*Moderate*
	Helictrotrichon Sempervirens	*Blue Oat Grass*	*Low*
	Heteromeles Arbutifolia	*Toyon*	*Low*
	Heuchera 'Vesuvius'	*Coral Bells*	*Moderate*
	Liriope Muscari 'Varegata'	*Variegated Lily Turf*	*Moderate*
	Miscanthus S. 'Morning Light'	*Morning Light Maiden Grass*	*Moderate*
	Penstemon 'Apple Blossom'	*Apple Blossom Penstemon*	*Moderate*
	Perovskia Atriplicifilia	*Russian Sage*	*Low*
	Rhamnus C. 'Eve Case'	*Coffeeberry*	*Low*
	Rosmarinus O. 'Prostratus'	*Dwarf Rosemary*	*Low*
	Rosa Californica	*California Wild Rose*	*Low*
	Spiraea Vanhouttei	*Bridal Wreath Spiraea*	*Low*
	Teucrium Chamaedrys	*Germander*	*Moderate*
	Westrinngea Fruticosa	*Costal Rosemary*	*Moderate*